REVISIONS			
LTR	**DESCRIPTION**	**DATE**	**APPROVED**
A	Update boilerplate to current MIL-PRF-38535 requirements. - PHN	16-09-15	Thomas M. Hess

CURRENT DESIGN ACTIVITY CAGE CODE 16236
HAS CHANGED NAMES TO:
DLA LAND AND MARITIME
COLUMBUS, OHIO 43218-3990

Prepared in accordance with ASME Y14.24

Vendor item drawing

REV																						
PAGE																						
REV																						
PAGE																						
REV STATUS OF PAGES	**REV**			A	A	A	A	A	A	A	A	A	A	A	A							
	PAGE			1	2	3	4	5	6	7	8	9	10	11	12							

PMIC N/A	**PREPARED BY** RICK OFFICER	**DEFENSE SUPPLY CENTER COLUMBUS** **COLUMBUS, OHIO 43218-3990**
Original date of drawing YY MM DD 04-09-27	**CHECKED BY** TOM HESS **APPROVED BY** RAYMOND MONNIN	**TITLE** MICROCIRCUIT, DIGITAL-LINEAR, TEMPERATURE SENSOR, MONOLITHIC SILICON
	SIZE A / **CODE IDENT. NO.** 16236	**DWG NO.** **V62/04728**
	REV A	**PAGE** 1 **OF** 12

1. SCOPE

1.1 Scope. This drawing documents the general requirements of a high performance temperature sensor microcircuit, with an operating temperature range of -55°C to +130°C.

1.2 Vendor Item Drawing Administrative Control Number. The manufacturer's PIN is the item of identification. The vendor item drawing establishes an administrative control number for identifying the item on the engineering documentation:

V62/04728	-	01	X	A
Drawing number		Device type (See 1.2.1)	Case outline (See 1.2.2)	Lead finish (See 1.2.3)

1.2.1 Device type(s).

Device type	Generic	Circuit function
01	LM20CEP	Temperature sensor
02	LM20BEP	Temperature sensor
03	LM20SEP	Temperature sensor

1.2.2 Case outline(s). The case outline(s) are as specified herein.

Outline letter	Number of pins	JEDEC PUB 95	Package style
X	5	SC70	Plastic small outline
Y	4	See figure 1	Micro SMD ball grid array
Z	4	See figure 1	Micro SMD ball grid array

1.2.3 Lead finishes. The lead finishes are as specified below or other lead finishes as provided by the device manufacturer:

Finish designator	Material
A	Hot solder dip
B	Tin-lead plate
C	Gold plate
D	Palladium
E	Gold flash palladium
Z	Other

1.3 Absolute maximum ratings. 1/

Supply voltage range (V+) ..... +6.5 V to –0.2 V
Output voltage ..... ((V+) + 0.6 V) to –0.6 V
Output current ..... 10 mA
Input current at any pin ..... 5 mA 2/
Storage temperature range ..... -65°C to +150°C
Maximum junction temperature (T_{JMAX}) ..... +150°C
Electro static discharge (ESD) : 3/
Human body model ..... 2500 V
Machine model ..... 250 V
Lead temperature, case X : 4/
Vapor phase (60 seconds) ..... +215°C
Infared (15 seconds) ..... +220°C

1.4 Recommended operating conditions. 5/

Supply voltage range (V+) ..... +2.4 V to +5.5 V
Specified temperature range (T_A) ..... $T_{MIN} \leq T_A \leq T_{MAX}$
Device types 01 and 02 with 2.4 V ≤ V+ ≤ 2.7 V ..... -30°C ≤ T_A ≤ +130°C
Device types 01 and 02 with 2.7 V ≤ V+ ≤ 5.5 V ..... -55°C ≤ T_A ≤ +130°C
Device type 03 with 2.4 V ≤ V+ ≤ 5.5 V ..... -30°C ≤ T_A ≤ +125°C
Device type 03 with 2.7 V ≤ V+ ≤ 5.5 V ..... -40°C ≤ T_A ≤ +125°C
Thermal resistance, junction to ambient (θ_{JA}):
Case outline X ..... 415°C/W
Case outlines Y and Z ..... 340°C/W

1/ Stresses beyond those listed under “absolute maximum rating” may cause permanent damage to the device. These are stress ratings only, and functional operation of the device at these or any other conditions beyond those indicated under “ recommended operating conditions” is not implied. Exposure to absolute-maximum-rated conditions for extended periods may affect device reliability.

2/ When the input voltage (V_I) at any pin exceeds power supplies (V_I < GND or V_I > V+), the current at that pin should be limited to 5 mA.

3/ The human body model is a 100 pF capacitor discharge through a 1.5 kΩ resistor into each pin. The machine model is a 200 pF capacitor discharged directly into each pin.

4/ See manufacturer’s data book for methods of soldering surface mount devices.

5/ Use of this product beyond the manufacturers design rules or stated parameters is done at the user’s risk. The manufacturer and/or distributor maintain no responsibility or liability for product used beyond the stated limits.

2. APPLICABLE DOCUMENTS

JEDEC – SOLID STATE TECHNOLOGY ASSOCIATION (JEDEC)

JEP95 – Registered and Standard Outlines for Semiconductor Devices

(Copies of these documents are available online at http:/www.jedec.org or from JEDEC – Solid State Technology Association, 3103 North 10th Street, Suite 240–S, Arlington, VA 22201-2107).

3. REQUIREMENTS

3.1 Marking. Parts shall be permanently and legibly marked with the manufacturer's part number as shown in 6.3 herein and as follows:

A. Manufacturer's name, CAGE code, or logo
B. Pin 1 identifier
C. ESDS identification (optional)

3.2 Unit container. The unit container shall be marked with the manufacturer's part number and with items A and C (if applicable) above.

3.3 Electrical characteristics. The maximum and recommended operating conditions and electrical performance characteristics are as specified in 1.3, 1.4, and table I herein.

3.4 Design, construction, and physical dimension. The design, construction, and physical dimensions are as specified herein.

3.5 Diagrams.

3.5.1 Case outlines. The case outlines shall be as shown in 1.2.2 and figure 1.

3.5.2 Terminal connections. The terminal connections shall be as shown in figure 2.

TABLE I. Electrical performance characteristics. 1/

Test	Symbol	Conditions V+ = 2.7 V unless otherwise specified	Temperature, $T_A = T_J$	Device type	Limits 2/		Unit
					Min	Max	
Temperature to voltage error 3/		$V_O = (-3.88 \times 10^{-6} \times T^2) + (-1.15 \times 10^{-2} \times T) + 1.8639$ V	+25°C to +30°C	01		±4.0	°C
				02		±1.5	
				03		±2.5	
			+130°C	01		±5.0	
				02		±2.5	
			+125°C	01		±5.0	
				02		±2.5	
				03		±3.5	
			+100°C	01		±4.7	
				02		±2.2	
				03		±3.2	
			+85°C	01		±4.6	
				02		±2.1	
				03		±3.1	
			+80°C	01		±4.5	
				02		±2.0	
				03		±3.0	
			0°C	01		±4.4	
				02		±1.9	
				03		±2.9	
			-30°C	01	±4.7		
				02	±2.2		
				03	±3.3		

See footnotes at end of table.

TABLE I. Electrical performance characteristics – Continued. 1/

Test	Symbol	Conditions V+ = 2.7 V unless otherwise specified	Temperature, $T_A = T_J$	Device type	Limits 2/		Unit
					Min	Max	
Temperature to voltage error 3/		$V_O = (-3.88 \times 10^{-6} \times T^2) + (-1.15 \times 10^{-2} \times T) + 1.8639$ V	-40°C	01		±4.8	°C
				02		±2.3	
				03		±3.5	
			-55°C	01		±5.0	
				02		±2.5	
Output voltage at 0°C			+25°C	All	+1.8639 typical 4/		V
Variance from curve			+25°C	All	±1.0 typical 4/		°C
Non-linearity 5/			-20°C ≤ T_A ≤ +80°C	All	±0.4 typical 4/		%
Sensor gain (temperature sensitivity or average slope) to equation		V_O = -11.77 mV/°C x T + 1.860 V	-30°C ≤ T_A ≤ +100°C	01	-11.0	-12.6	mV/°C
				02	-11.4	-12.2	
				03	-11.0	-12.6	
			+25°C	All	-11.77 typical 4/		
Output impedance		0 μA ≤ I_L ≤ +16 μA 6/ 7/	9/	All		160	Ω
Load regulation 8/		0 μA ≤ I_L ≤ +16 μA 6/ 7/	9/	All		-2.5	mV
Line regulation		+2.4 V ≤ V+ ≤ +5.0 V	9/	01,03		+3.7	mV/V
				02		+3.3	
		+5.0 V ≤ V+ ≤ +5.5 V		All		+11	mV

See footnotes at end of table.

TABLE I. Electrical performance characteristics – Continued. 1/

Test	Symbol	Conditions	Temperature, $T_A = T_J$	Device type	Limits 2/		Unit
					Min	Max	
Quiescent current		+2.4 V ≤ V+ ≤ +5.0 V	+25°C	All		7	μA
					4.5 typical 4/		
		+5.0 V ≤ V+ ≤ +5.5 V				9	
					4.5 typical 4/		
		+2.4 V ≤ V+ ≤ +5.0 V	9/			10	
			+25°C		4.5 typical 4/		
Change of quiescent current		+2.4 V ≤ V+ ≤ +5.5 V	+25°C	All	+0.7 typical 4/		μA
Temperature of quiescent current coefficient			+25°C	All	-11 typical 4/		nA/°C
Shutdown current		V+ ≤ +0.8 V	+25°C	All	0.02 typical 4/		μA

1/ Testing and other quality control techniques are used to the extent deemed necessary to assure product performance over the specified temperature range. Product may not necessarily be tested across the full temperature range and all parameters may not necessarily be tested. In the absence of specific parametric testing, product performance is assured by characterization and/or design.

2/ Limits are guaranteed to manufacturer's AOQL (average outgoing quality level).

3/ Accuracy is defined as the error between the measured and calculated output voltage at the specified conditions of voltage, current, and temperature (expressed in °C).

4/ Typical are at $T_J = T_A = 25°C$ and represent most likely parametric norm.

5/ Non-linearity is defined as the deviation of the calculated output-voltage versus temperature curve from the best fit straight line, over temperature range specified.

6/ Negative currents are flowing into the device. Positive currents are flowing out of the device. Using this convention the device can at most sink –1 μA and source +16 μA.

7/ Load regulation or output impedance specifications apply over the supply voltage range +2.4 V to +5.5 V.

8/ Regulation is measured at constant junction temperature, using pulse testing with a low duty cycle. Changes in output due to heating effects can be computed by multiplying the internal dissipation by the thermal resistance.

9/ See "Recommended Operating Conditions" for the appropriate temperature range.

Case X

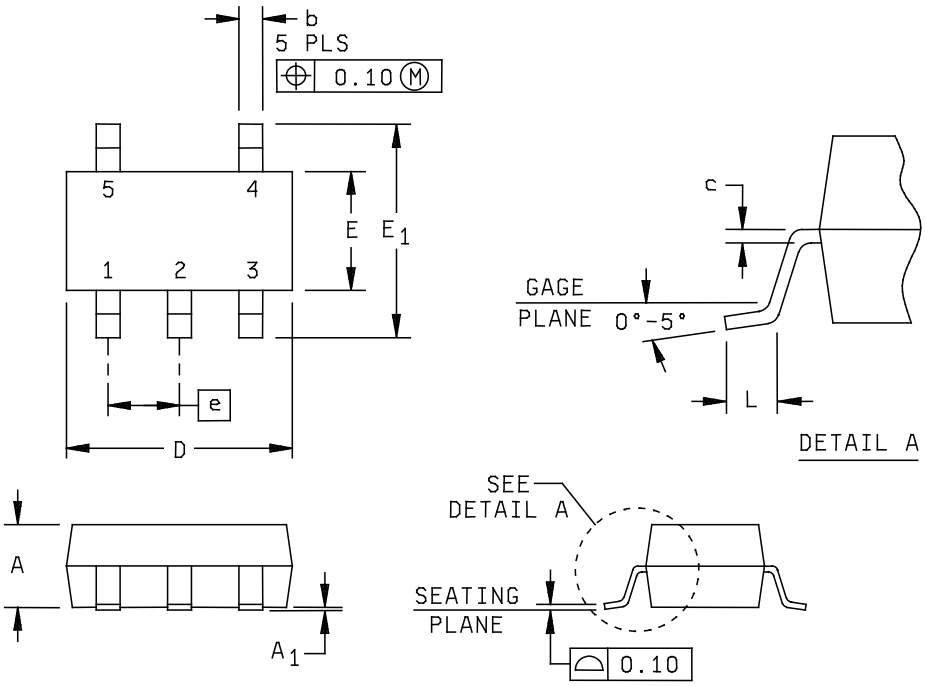

Dimensions									
Symbol	Inches		Millimeters		Symbol	Inches		Millimeters	
	Min	Max	Min	Max		Min	Max	Min	Max
A	---	0.035	---	0.900	E	0.045	0.053	1.150	1.350
A1	0	0.003	0	0.100	E1	0.070	0.094	1.800	2.400
b	0.005	0.011	0.150	0.300	e	0.025 nominal		0.650 nominal	
c	0.003	0.007	0.100	0.200	L	0.013	0.017	0.350	0.450
D	0.074	0.082	1.900	2.100					

NOTE:
Controlling dimensions are inches, millimeters dimensions are given for reference only.
JEDEC similar package is SC70.

FIGURE 1. Case outlines.

Case Y

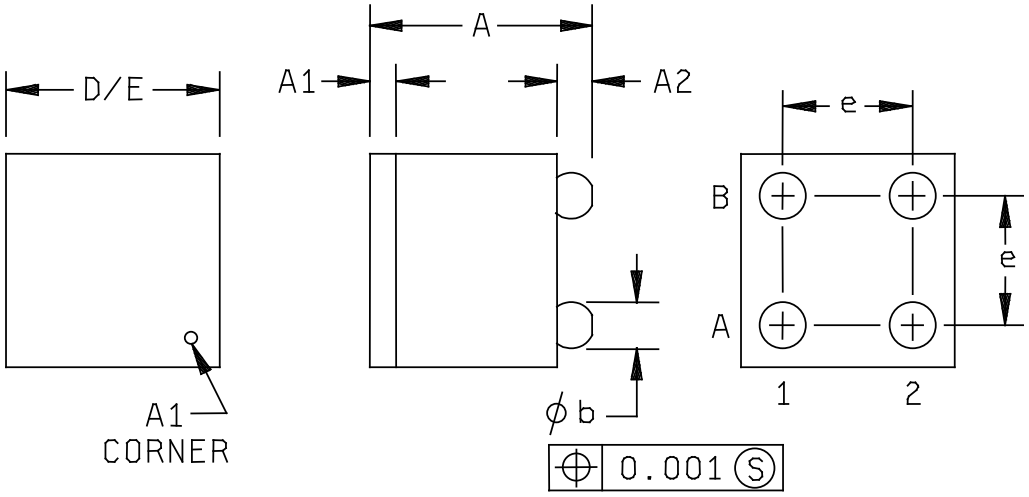

Dimensions									
Symbol	Inches		Millimeters		Symbol	Inches		Millimeters	
	Min	Max	Min	Max		Min	Max	Min	Max
A	0.033	0.037	0.850	0.950	D/E	0.032	0.034	0.823	0.883
A1	0.001	0.004	0.050	0.125	e	0.019	---	0.500	---
A2	0.004	0.005	0.110	0.150	n	4 leads		4 leads	
ϕb	0.006	0.007	0.160	0.180					

NOTE:
Controlling dimensions are inches, millimeters dimensions are given for reference only.

FIGURE 1. Case outlines – Continued.

Case Z

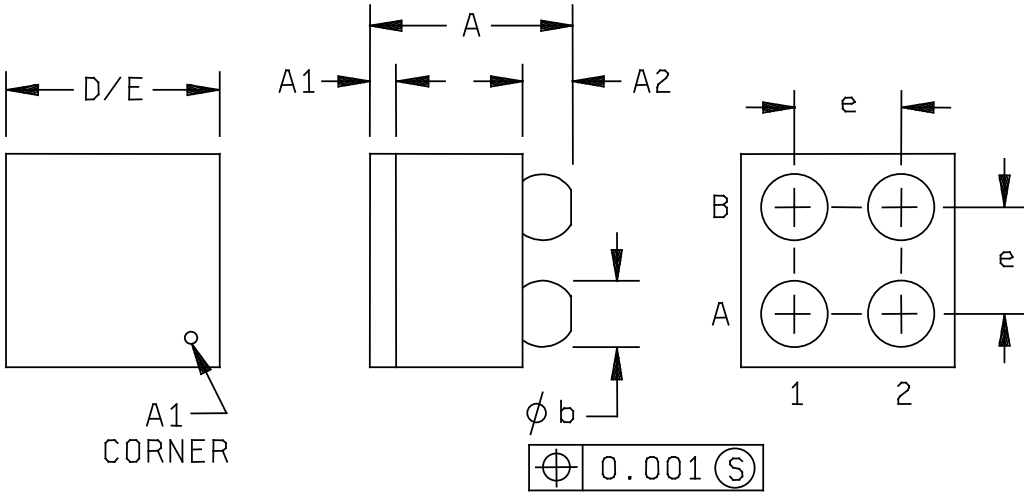

Dimensions									
Symbol	Inches		Millimeters		Symbol	Inches		Millimeters	
	Min	Max	Min	Max		Min	Max	Min	Max
A	0.020	0.026	0.525	0.675	D/E	0.036	0.039	0.933	0.993
A1	0.001	0.004	0.050	0.125	e	0.019	---	0.500	---
A2	0.008	0.010	0.215	0.265	n	4 leads		4 leads	
ϕb	0.012	0.013	0.305	0.335					

NOTE:
Controlling dimensions are inches, millimeters dimensions are given for reference only.

FIGURE 1. Case outlines – Continued.

Device types	01, 02, 03		
Case outlines	X	Y and Z	
Terminal number	Terminal symbol	Terminal number	Terminal symbol
1	NC	A1	NC
2	GND	A2	GND
3	V_O	B1	V_O
4	V+	B2	V+
5	GND	---	---

FIGURE 2. Terminal connections.

4. VERIFICATION

4.1 Product assurance requirements. The manufacturer is responsible for performing all inspection and test requirements as indicated in their internal documentation. Such procedures should include proper handling of electrostatic sensitive devices, classification, packaging, and labeling of moisture sensitive devices, as applicable.

5. PREPARATION FOR DELIVERY

5.1 Packaging. Preservation, packaging, labeling, and marking shall be in accordance with the manufacturer's standard commercial practices for electrostatic discharge sensitive devices.

6. NOTES

6.1 ESDS. Devices are electrostatic discharge sensitive and are classified as ESDS class 1 minimum.

6.2 Configuration control. The data contained herein is based on the salient characteristics of the device manufacturer's data book. The device manufacturer reserves the right to make changes without notice. This drawing will be modified as changes are provided.

6.3 Suggested source(s) of supply. Identification of the suggested source(s) of supply herein is not to be construed as a guarantee of present or continued availability as a source of supply for the item. DLA Land and Maritime maintains an online database of all current sources of supply at https://landandmaritimeapps.dla.mil/programs/smcr/default.aspx

Vendor item drawing administrative control number 1/	Device manufacturer CAGE code	Package number 2/	Vendor part number
V62/04728-01XA	2/	MAA05A	LM20CIM7EP
V62/04728-01YA	2/	BPA04DDC	---
V62/04728-01ZA	2/	TLA04ZZA	---
V62/04728-02XA	2/	MAA05A	---
V62/04728-02YA	2/	BPA04DDC	---
V62/04728-02ZA	2/	TLA04ZZA	---
V62/04728-03XA	2/	MAA05A	---
V62/04728-03YA	2/	BPA04DDC	---
V62/04728-03ZA	2/	TLA04ZZA	---

1/ The vendor item drawing establishes an administrative control number for identifying the item on the engineering documentation.
2/ Not available from an approved source of supply.

CAGE code	Source of supply
27014	National Semiconductor 2900 Semiconductor Drive P.O. Box 58090 Santa Clara, CA 95052-8090