REVISIONS			
LTR	DESCRIPTION	DATE (YR-MO-DA)	APPROVED
A	Update drawing to reflect current requirements.	05-01-20	Raymond Monnin
B	Figure 2, case outlines N and T, correct terminal number 2. Add note to table II, Group C end-point electrical parameters. -gz.	09-09-02	Charles F. Saffle
C	Updated drawing paragraphs. -sld	12-05-15	Charles F. Saffle

REV																			
SHEET																			
REV																			
SHEET																			
REV STATUS				REV			C	C	C	C	C	C	C	C	C	C	C			
OF SHEETS				SHEET			1	2	3	4	5	6	7	8	9	10	11			

PMIC N/A

PREPARED BY
Gary Zahn

STANDARD MICROCIRCUIT DRAWING

THIS DRAWING IS AVAILABLE FOR USE BY ALL DEPARTMENTS AND AGENCIES OF THE DEPARTMENT OF DEFENSE

AMSC N/A

CHECKED BY
Michael C. Jones

APPROVED BY
Raymond Monnin

DRAWING APPROVAL DATE
99-07-30

REVISION LEVEL
C

DLA LAND AND MARITIME
COLUMBUS, OHIO 43218-3990
http://www.landandmaritime.dla.mil/

MICROCIRCUIT, LINEAR, VOLTAGE REGULATOR, 5 VOLT, NEGATIVE, FIXED, MONOLITHIC SILICON

SIZE	CAGE CODE	
A	**67268**	**5962-98642**

SHEET 1 OF 11

1. SCOPE

1.1 Scope. This drawing documents five product assurance classes as defined in paragraph 1.2.3 and MIL-PRF-38534. A choice of case outlines and lead finishes which are available and are reflected in the Part or Identifying Number (PIN). When available, a choice of radiation hardness assurance levels are reflected in the PIN.

1.2 PIN. The PIN shall be as shown in the following example:

5962	-	98642	01	H	T	A
½	½		½	½	½	½
½	½		½	½	½	½
½	½		½	½	½	½
Federal stock class designator	RHA designator (see 1.2.1)		Device type (see 1.2.2)	Device class designator (see 1.2.3)	Case outline (see 1.2.4)	Lead finish (see 1.2.5)

_____ _____/
\/
Drawing number

1.2.1 Radiation hardness assurance (RHA) designator. RHA marked devices shall meet the MIL-PRF-38534 specified RHA levels and shall be marked with the appropriate RHA designator. A dash (-) indicates a non-RHA device.

1.2.2 Device type(s). The device type(s) identify the circuit function as follows:

Device type	Generic number 1/	Circuit function
01	SDP7905A	Negative voltage regulator, 5 volt, 1.0 A, fixed

1.2.3 Device class designator. This device class designator shall be a single letter identifying the product assurance level. All levels are defined by the requirements of MIL-PRF-38534 and require QML Certification as well as qualification (Class H, K, and E) or QML Listing (Class G and D). The product assurance levels are as follows:

Device class	Device performance documentation
K	Highest reliability class available. This level is intended for use in space applications.
H	Standard military quality class level. This level is intended for use in applications where non-space high reliability devices are required.
G	Reduced testing version of the standard military quality class. This level uses the Class H screening and In-Process Inspections with a possible limited temperature range, manufacturer specified incoming flow, and the manufacturer guarantees (but may not test) periodic and conformance inspections (Group A, B, C and D).
E	Designates devices which are based upon one of the other classes (K, H, or G) with exception(s) taken to the requirements of that class. These exception(s) must be specified in the device acquisition document; therefore the acquisition document should be reviewed to ensure that the exception(s) taken will not adversely affect system performance.
D	Manufacturer specified quality class. Quality level is defined by the manufacturers internal, QML certified flow. This product may have a limited temperature range.

1/ The SDP7905A is similar to the 7905A listed on Standard Microcircuit Drawing 5962-88746.

1.2.4 Case outline(s). The case outline(s) are as designated in MIL-STD-1835 and as follows:

Outline letter	Descriptive designator	Terminals	Package style
N	See figure 1	3	Z-tab with nonisolated tab, (TO-257Z), with glass seal
T	See figure 1	3	Flange mount with nonisolated tab, (TO-257), with glass seal
U	See figure 1	3	Flange mount with isolated tab, (TO-257), with glass seal
Z	See figure 1	3	Z-tab with isolated tab, (TO-257Z), with glass seal

1.2.5 Lead finish. The lead finish shall be as specified in MIL-PRF-38534.

1.3 Absolute maximum ratings. 1/

Input voltage:	
Operating or output shorted to ground	-35 V dc
Transient	-43 V dc 2/
Storage temperature range	-65°C to +150°C
Lead temperature (soldering, 10 seconds)	+300°C
Junction temperature (T_J)	+150°C 3/
Power dissipation (P_D):	
T_C = +25°C	15 W
T_A = +25°C	3.0 W
Thermal resistance, junction-to-case (q_{JC}):	
Cases N and T	3.5°C/W
Cases U and Z	4.2°C/W
Thermal resistance, junction-to-ambient (q_{JA})	42°C/W

1.4 Recommended operating conditions.

Input voltage range	-7.5 V dc to -20 V dc
Ambient operating temperature range (T_A)	-55°C to +125°C

2. APPLICABLE DOCUMENTS

2.1 Government specification, standards, and handbooks. The following specification, standards, and handbooks form a part of this drawing to the extent specified herein. Unless otherwise specified, the issues of these documents are those cited in the solicitation or contract.

DEPARTMENT OF DEFENSE SPECIFICATIONS

MIL-PRF-38534 - Hybrid Microcircuits, General Specification for.

1/ Stresses above the absolute maximum rating may cause permanent damage to the device. Extended operation at the maximum levels may degrade performance and affect reliability.
2/ The -43 volt input rating refers to the ability of the regulator to withstand high line or transient condition without damage. Since the regulator's maximum current capability is reduced, the output may fall out of regulation at high input voltages under nominal loading.
3/ The device is protected by a thermal shutdown circuit which is designed to turn off the output transistor whenever the device junction temperature is in excess of +150°C.

DEPARTMENT OF DEFENSE STANDARDS

MIL-STD-883 - Test Method Standard Microcircuits.
MIL-STD-1835 - Interface Standard for Electronic Component Case Outlines.

DEPARTMENT OF DEFENSE HANDBOOKS

MIL-HDBK-103 - List of Standard Microcircuit Drawings.
MIL-HDBK-780 - Standard Microcircuit Drawings.

(Copies of these documents are available online at https://assist.daps.dla.mil/quicksearch/ or from the Standardization Document Order Desk, 700 Robbins Avenue, Building 4D, Philadelphia, PA 19111-5094.)

2.2 Order of precedence. In the event of a conflict between the text of this drawing and the references cited herein, the text of this drawing takes precedence. Nothing in this document, however, supersedes applicable laws and regulations unless a specific exemption has been obtained.

3. REQUIREMENTS

3.1 Item requirements. The individual item performance requirements for device classes D, E, G, H, and K shall be in accordance with MIL-PRF-38534. Compliance with MIL-PRF-38534 shall include the performance of all tests herein or as designated in the device manufacturer's Quality Management (QM) plan or as designated for the applicable device class. The manufacturer may eliminate, modify or optimize the tests and inspections herein, however the performance requirements as defined in MIL-PRF-38534 shall be met for the applicable device class. In addition, the modification in the QM plan shall not affect the form, fit, or function of the device for the applicable device class.

3.2 Design, construction, and physical dimensions. The design, construction, and physical dimensions shall be as specified in MIL-PRF-38534 and herein.

3.2.1 Case outlines. The case outlines shall be in accordance with 1.2.4 herein and figure 1.

3.2.2 Terminal connections. The terminal connections shall be as specified on figure 2.

3.3 Electrical performance characteristics. Unless otherwise specified herein, the electrical performance characteristics are as specified in table I and shall apply over the full specified operating temperature range.

3.4 Electrical test requirements. The electrical test requirements shall be the subgroups specified in table II. The electrical tests for each subgroup are defined in table I.

3.5 Marking of devices. Marking of devices shall be in accordance with MIL-PRF-38534. The device shall be marked with the PIN listed in 1.2 herein. In addition, the manufacturer's vendor similar PIN may also be marked.

3.6 Data. In addition to the general performance requirements of MIL-PRF-38534, the manufacturer of the device described herein shall maintain the electrical test data (variables format) from the initial quality conformance inspection group A lot sample, for each device type listed herein. Also, the data should include a summary of all parameters manually tested, and for those which, if any, are guaranteed. This data shall be maintained under document revision level control by the manufacturer and be made available to the preparing activity (DLA Land and Maritime -VA) upon request.

3.7 Certificate of compliance. A certificate of compliance shall be required from a manufacturer in order to supply to this drawing. The certificate of compliance (original copy) submitted to DLA Land and Maritime -VA shall affirm that the manufacturer's product meets the performance requirements of MIL-PRF-38534 and herein.

3.8 Certificate of conformance. A certificate of conformance as required in MIL-PRF-38534 shall be provided with each lot of microcircuits delivered to this drawing.

TABLE I. Electrical performance characteristics.

Test	Symbol	Conditions 1/ $-55°C \le T_A \le +125°C$ unless otherwise specified	Group A subgroups	Device type	Limits		Unit
					Min	Max	
Output voltage	V_{OUT}	T_A = +25°C	1	01	-4.95	-5.05	V
		V_{IN} = -7.5 V to -20 V 2/	1, 2, 3		-4.85	-5.15	
Line regulation 3/ 4/	V_{RLINE}	V_{IN} = -7.5 V to -20 V	1	01		12	mV
			2, 3			25	
		V_{IN} = -8.0 V to -12 V	1	01		5	mV
			2, 3			12	
Load regulation 3/	V_{RLOAD}	V_{IN} = -10.0 V, I_O = 5.0 mA to 1.5 A	1	01		20	mV
			2, 3			25	
		V_{IN} = -10.0 V, I_O = 250 mA to 750 mA	1	01		15	mV
			2, 3			30	
Standby current drain	I_{SCD}		1	01		2.5	mA
			2, 3			3.0	
Standby current drain change with line	$D I_{SCD}$ (line)	V_{IN} = -7.0 V to -20 V	1, 2, 3	01		0.4	mA
Standby current drain change with load	$D I_{SCD}$ (load)	I_O = 5.0 mA to 1.0 A	1, 2, 3	01		0.4	mA
Dropout voltage	V_{DO}	ΔV_{OUT} = 100 mV, I_O = 1.0 A	1, 2, 3	01		2.5	V
Peak output current	$I_O(pk)$	T_A = +25°C	1	01	1.5	3.3	A
Short circuit current 5/	I_{OS}	V_{IN} = -35 V	1	01		1.2	A
			2, 3			2.8	
Ripple rejection	$\frac{DV_{IN}}{DV_{OUT}}$	f = 120 Hz, V_{IN} = -8 V to -18 V	4	01	63		dB
			5, 6 6/		60		

See footnotes at end of table.

TABLE I. Electrical performance characteristics – Continued.

Test	Symbol	Conditions 1/ $-55°C \le T_A \le +125°C$ unless otherwise specified	Group A subgroups	Device type	Limits		Unit
					Min	Max	
Output noise voltage 6/	N_O	f = 10 Hz to 100 kHz, T_A = +25°C	7	01		40	µV/V rms
Long term stability 6/	$\frac{DV_{OUT}}{Dt}$	t = 1000 hours, T_A = +25°C	7	01		75	mV

1/ Unless otherwise specified, V_{IN} = -10 V and I_O = 500 mA.

2/ I_O = 5 mA to 1.0 A, P £ 15 W.

3/ All measurements except output noise voltage and ripple rejection are made at constant junction temperature and with low duty cycle.

4/ Minimum load current for full line regulation is 5.0 mA.

5/ Short circuit protection is only assured up to V_{IN} = -35 V.

6/ If not tested, shall be guaranteed to the limits specified in table I.

Case outlines T and U.

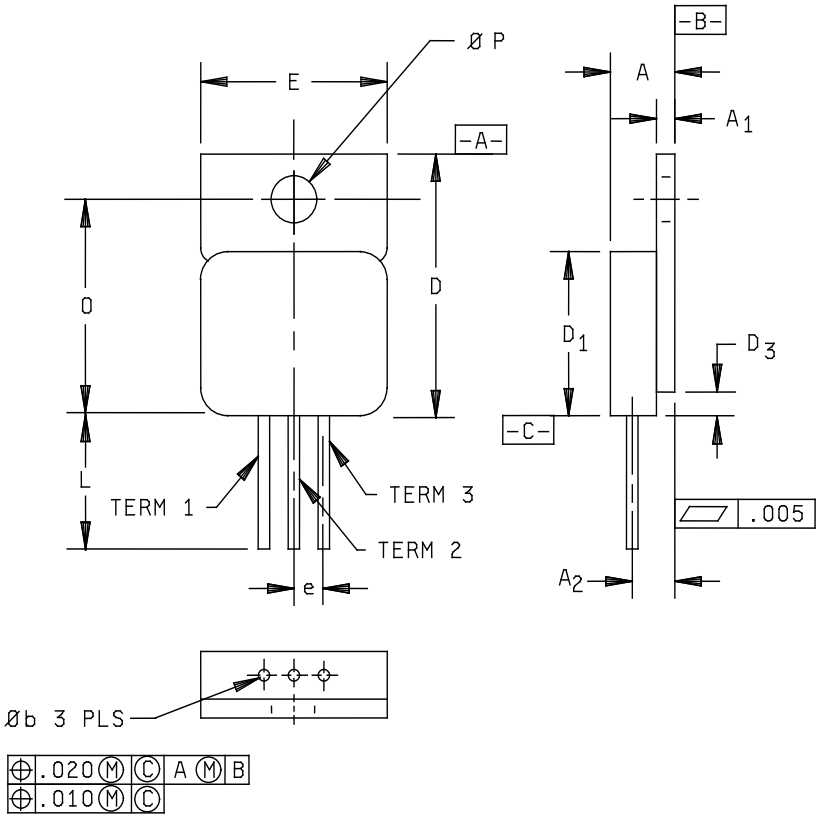

Inches	mm
0.005	0.13
0.010	0.25
0.020	0.51

Symbol	Millimeters		Inches	
	Min	Max	Min	Max
A	4.83	5.08	.190	.200
A1	0.89	1.14	.035	.045
A2	3.05 BSC		.120 BSC	
øb	0.64	0.89	.025	.035
D	16.38	16.89	.645	.665
D1	10.41	10.92	.410	.430
D3	0.00	1.65	.000	.065
e	2.54 BSC		.100 BSC	
E	10.41	10.72	.410	.422
L	12.70	19.05	.500	.750
O	13.39	13.64	.527	.537
øP	3.56	3.81	.140	.150

NOTE:
The U.S. government preferred system of measurement is the metric SI system. However, this item was originally designed using inch-pound units of measurement. In the event of conflict between the metric and inch-pound units, the inch-pound units shall take precedence.

FIGURE 1. Case outlines.

Case outlines N and Z.

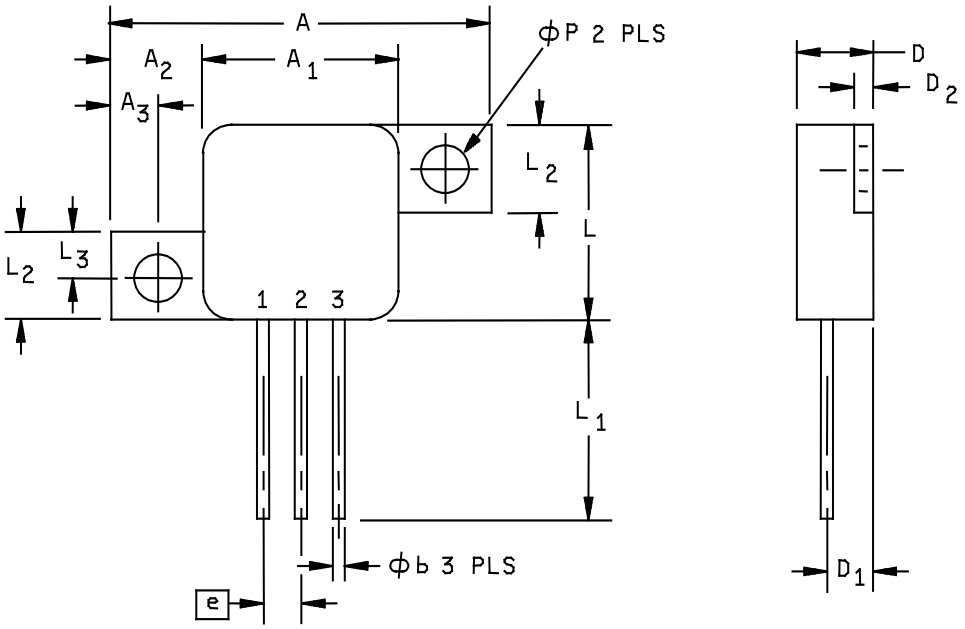

Symbol	Millimeters		Inches	
	Min	Max	Min	Max
A	23.11	23.37	.910	.920
A1	10.41	10.67	.410	.420
A2	6.22	6.48	.245	.255
A3	3.05	3.30	.120	.130
øb	0.71	0.81	.028	.032
D	4.70	5.59	.135	.220
D1	2.92	3.18	.115	.125
D2	0.89	1.14	.035	.045
e	2.54 BSC		.100 BSC	
L	10.41	10.67	.410	.420
L1	12.70	19.05	.500	.750
L2	6.22	6.48	.245	.255
L3	3.05	3.30	.120	.130
øP	3.05	3.30	.120	.130

NOTE:
The U.S. government preferred system of measurement is the metric SI system. However, this item was originally designed using inch-pound units of measurement. In the event of conflict between the metric and inch-pound units, the inch-pound units shall take precedence.

FIGURE 1. Case outlines - Continued.

Case outlines N and Z

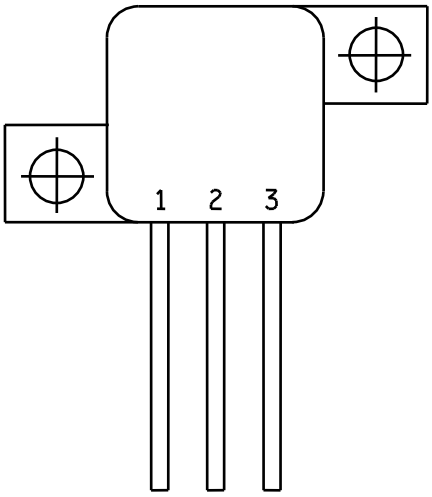

Top view

Case outlines T and U

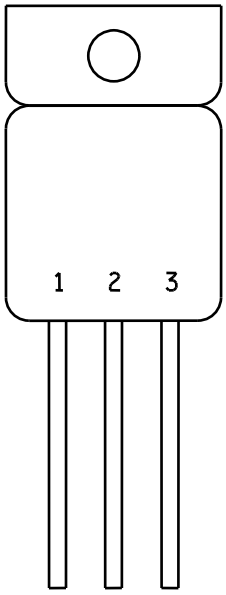

Top view

Device type	01	
Case outlines	N and T (nonisolated tab)	U and Z (isolated tab)
Terminal number	Terminal symbol	Terminal symbol
1	Ground	Ground
2	Input	Input
3	Output	Output
Tab	Input	No connection

FIGURE 2. Terminal connections.

TABLE II. Electrical test requirements.

MIL-PRF-38534 test requirements	Subgroups (in accordance with MIL-PRF-38534, group A test table)
Interim electrical parameters	1
Final electrical parameters	1*, 2, 3, 4
Group A test requirements	1, 2, 3, 4, 5**, 6**, 7**
Group C end-point electrical 1/ parameters	1, 2, 3
End-point electrical parameters for Radiation Hardness Assurance (RHA) devices	Not applicable

1/ As a minimum, for all Group C testing performed after September 2, 2009 manufacturers shall perform subgroups 1, 2, and 3 from the Group A electrical test table (Table C-Xa of MIL-PRF-38534).
* PDA applies to subgroup 1.
** Subgroups 5, 6, and 7, if not tested shall be guaranteed to the limits specified in table I.

4. VERIFICATION

4.1 Sampling and inspection. Sampling and inspection procedures shall be in accordance with MIL-PRF-38534 or as modified in the device manufacturer's Quality Management (QM) plan. The modification in the QM plan shall not affect the form, fit, or function as described herein.

4.2 Screening. Screening shall be in accordance with MIL-PRF-38534. The following additional criteria shall apply:

a. Burn-in test, method 1015 of MIL-STD-883.

(1) Test condition A, B, C, or D. The test circuit shall be maintained by the manufacturer under document revision level control and shall be made available to either DLA Land and Maritime -VA or the acquiring activity upon request. Also, the test circuit shall specify the inputs, outputs, biases, and power dissipation, as applicable, in accordance with the intent specified in method 1015 of MIL-STD-883.

(2) T_A as specified in accordance with table I of method 1015 of MIL-STD-883.

b. Interim and final electrical test parameters shall be as specified in table II herein, except interim electrical parameter tests prior to burn-in are optional at the discretion of the manufacturer.

4.3 Conformance and periodic inspections. Conformance inspection (CI) and periodic inspection (PI) shall be in accordance with MIL-PRF-38534 and as specified herein.

4.3.1 Group A inspection (CI). Group A inspection shall be in accordance with MIL-PRF-38534 and as follows:

a. Tests shall be as specified in table II herein.

b. Subgroups 8, 9, 10, and 11 shall be omitted.

4.3.2 Group B inspection (PI). Group B inspection shall be in accordance with MIL-PRF-38534.

4.3.3 Group C inspection (PI). Group C inspection shall be in accordance with MIL-PRF-38534 and as follows:

a. End-point electrical parameters shall be as specified in table II herein.

b. Steady-state life test, method 1005 of MIL-STD-883.

(1) Test condition A, B, C, or D. The test circuit shall be maintained by the manufacturer under document revision level control and shall be made available to either DLA Land and Maritime -VA or the acquiring activity upon request. Also, the test circuit shall specify the inputs, outputs, biases, and power dissipation, as applicable, in accordance with the intent specified in method 1005 of MIL-STD-883.

(2) T_A as specified in accordance with table I of method 1005 of MIL-STD-883.

(3) Test duration: 1,000 hours, except as permitted by method 1005 of MIL-STD-883.

4.3.4 Group D inspection (PI). Group D inspection shall be in accordance with MIL-PRF-38534.

4.3.5 Radiation Hardness Assurance (RHA) inspection. RHA inspection is not currently applicable to this drawing.

5. PACKAGING

5.1 Packaging requirements. The requirements for packaging shall be in accordance with MIL-PRF-38534.

6. NOTES

6.1 Intended use. Microcircuits conforming to this drawing are intended for use for Government microcircuit applications (original equipment), design applications, and logistics purposes.

6.2 Replaceability. Microcircuits covered by this drawing will replace the same generic device covered by a contractor-prepared specification or drawing.

6.3 Configuration control of SMD's. All proposed changes to existing SMD's will be coordinated as specified in MIL-PRF-38534.

6.4 Record of users. Military and industrial users shall inform DLA Land and Maritime when a system application requires configuration control and the applicable SMD to that system. DLA Land and Maritime will maintain a record of users and this list will be used for coordination and distribution of changes to the drawings. Users of drawings covering microelectronic devices (FSC 5962) should contact DLA Land and Maritime-VA, telephone (614) 692-0547.

6.5 Comments. Comments on this drawing should be directed to DLA Land and Maritime-VA, Columbus, Ohio 43218-3990, or telephone (614) 692-1081.

6.6 Sources of supply. Sources of supply are listed in MIL-HDBK-103 and QML-38534. The vendors listed in MIL-HDBK-103 and QML-38534 have submitted a certificate of compliance (see 3.7 herein) to DLA Land and Maritime-VA and have agreed to this drawing.

STANDARD MICROCIRCUIT DRAWING BULLETIN

DATE: 12-05-15

Approved sources of supply for SMD 5962-98642 are listed below for immediate acquisition information only and shall be added to MIL-HDBK-103 and QML-38534 during the next revisions. MIL-HDBK-103 and QML-38534 will be revised to include the addition or deletion of sources. The vendors listed below have agreed to this drawing and a certificate of compliance has been submitted to and accepted by DLA Land and Maritime -VA. This information bulletin is superseded by the next dated revisions of MIL-HDBK-103 and QML-38534. DLA Land and Maritime maintains an online database of all current sources of supply at http://www.landandmaritime.dla.mil/Programs/Smcr/.

Standard microcircuit drawing PIN 1/ 2/	Vendor CAGE number	Vendor similar PIN 3/
5962-9864201HNA 5962-9864201HNC	21845 21845	SDP7905ANHD SDP7905ANHG
5962-9864201HTA 5962-9864201HTC	21845 21845	SDP7905ATHD SDP7905ATHG
5962-9864201HUA 5962-9864201HUC	21845 21845	SDP7905AUHD SDP7905AUHG
5962-9864201HZA 5962-9864201HZC	21845 21845	SDP7905AZHD SDP7905AZHG

1/ The lead finish shown for each PIN, representing a hermetic package, is the most readily available from the manufacturer listed for that part. If the desired lead finish is not listed contact the Vendor to determine availability.

2/ The SMD device types listed above are similar to the device types listed on SMD 5962-88746.

3/ Caution. Do not use this number for item acquisition. Items acquired to this number may not satisfy the performance requirements of this drawing.

Vendor CAGE number	Vendor name and address
21845	Solitron Devices, Incorporated 3301 Electronics Way West Palm Beach, FL 33407

The information contained herein is disseminated for convenience only and the Government assumes no liability whatsoever for any inaccuracies in the information bulletin.