REVISIONS			
LTR	DESCRIPTION	DATE (YR-MO-DA)	APPROVED
A	Update to current requirements. Editorial changes throughout. - gap	06-10-05	Raymond Monnin
B	Remove class M references. Update drawing to current MIL-PRF-38535 requirements. - jt	16-01-29	Charles F. Saffle

REV																				
SHEET																				
REV																				
SHEET																				
REV STATUS				REV			B	B	B	B	B	B	B	B	B	B	B	B	B	B
OF SHEETS				SHEET			1	2	3	4	5	6	7	8	9	10	11	12	13	14

PMIC N/A

PREPARED BY
Larry E. Shaw

DLA LAND AND MARITIME
COLUMBUS, OHIO 43218-3990
http://www.landandmaritime.dla.mil

STANDARD MICROCIRCUIT DRAWING

THIS DRAWING IS AVAILABLE FOR USE BY ALL DEPARTMENTS AND AGENCIES OF THE DEPARTMENT OF DEFENSE

CHECKED BY
Tuan D. Nguyen

APPROVED BY
Raymond L. Monnin

DRAWING APPROVAL DATE
96-12-12

MICROCIRCUIT, DIGITAL, BIPOLAR, LOW POWER SCHOTTKY, DUAL 2-LINE TO 4-LINE DECODERS/ DEMULTIPLEXERS, MONOLITHIC SILICON

AMSC N/A

REVISION LEVEL
B

SIZE	CAGE CODE	
A	**67268**	**5962-97508**

SHEET 1 OF 14

1. SCOPE

1.1 Scope. This drawing documents two product assurance class levels consisting of high reliability (device class Q) and space application (device class V). A choice of case outlines and lead finishes are available and are reflected in the Part or Identifying Number (PIN). When available, a choice of Radiation Hardness Assurance (RHA) levels is reflected in the PIN.

1.2 PIN. The PIN is as shown in the following example:

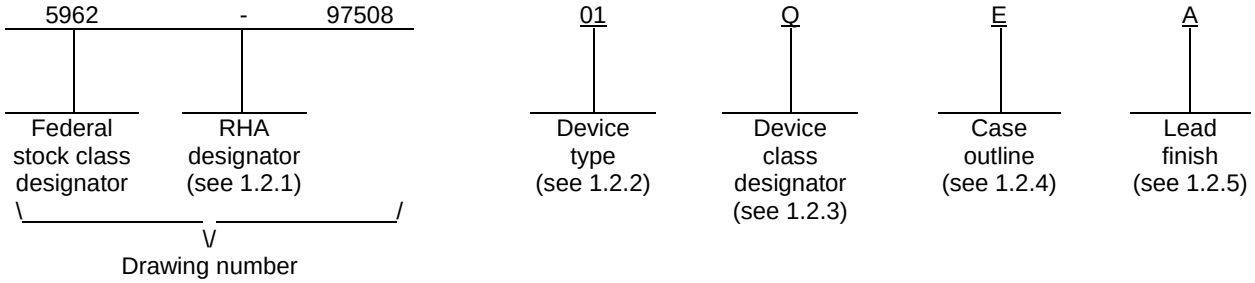

1.2.1 RHA designator. Device classes Q and V RHA marked devices meet the MIL-PRF-38535 specified RHA levels and are marked with the appropriate RHA designator. A dash (-) indicates a non-RHA device.

1.2.2 Device type. The device type identify the circuit function as follows:

Device type	Generic number	Circuit function
01	54LS155A	Dual 2-Line to 4-Line Decoder/Demultiplexer, TTL compatible inputs

1.2.3 Device class designator. The device class designator is a single letter identifying the product assurance level as follows:

Device class	Device requirements documentation
Q or V	Certification and qualification to MIL-PRF-38535

1.2.4 Case outlines. The case outlines are as designated in MIL-STD-1835 and as follows:

Outline letter	Descriptive designator	Terminals	Package style
E	GDIP1-T16 or CDIP2-T16	16	dual-in-line
F	GDFP2-F16 or CDFP3-F16	16	flat pack
2	CQCC1-N20	20	square leadless chip carrier

1.2.5 Lead finish. The lead finish is as specified in MIL-PRF-38535 for device classes Q and V.

1.3 Absolute maximum ratings. 1/ 2/ 3/

Supply voltage range (V_{CC})	7.0 V dc 2/
Input voltage	7.0 V dc
Operating free-air temperature range	-55°C to +125°C
Maximum power dissipation (P_D)	55 mW
Storage temperature range	-65°C to +150°C
Thermal resistance, junction-to-case (θ_{JC})	See MIL-STD-1835
Junction temperature (T_J)	150°C

1.4 Recommended operating conditions. 2/ 3/

Supply voltage range (V_{CC})	+4.5 V dc to +5.5 V dc
Minimum high level input voltage (V_{IH})	+2.0 V dc
Maximum low level input voltage (V_{IL})	+0.7 V dc
Maximum high level output current (I_{OH})	-400 µA
Maximum low level output current (I_{OL})	+4 mA
Case operating temperature range (T_C)	-55°C to +125°C

2. APPLICABLE DOCUMENTS

2.1 Government specification, standards, and handbooks. The following specification, standards, and handbooks form a part of this drawing to the extent specified herein. Unless otherwise specified, the issues of these documents are those cited in the solicitation or contract.

DEPARTMENT OF DEFENSE SPECIFICATION

MIL-PRF-38535 - Integrated Circuits, Manufacturing, General Specification for.

DEPARTMENT OF DEFENSE STANDARDS

MIL-STD-883 - Test Method Standard Microcircuits.
MIL-STD-1835 - Interface Standard Electronic Component Case Outlines.

DEPARTMENT OF DEFENSE HANDBOOKS

MIL-HDBK-103 - List of Standard Microcircuit Drawings.
MIL-HDBK-780 - Standard Microcircuit Drawings.

(Copies of these documents are available online at http://quicksearch.dla.mil or from the Standardization Document Order Desk, 700 Robbins Avenue, Building 4D, Philadelphia, PA 19111-5094.)

2.2 Order of precedence. In the event of a conflict between the text of this drawing and the references cited herein, the text of this drawing takes precedence. Nothing in this document, however, supersedes applicable laws and regulations unless a specific exemption has been obtained.

1/ Stresses above the absolute maximum rating may cause permanent damage to the device. Extended operation at the maximum levels may degrade performance and affect reliability.
2/ Unless otherwise noted, all voltages are referenced to GND.
3/ The limits for the parameters specified herein shall apply over the full specified V_{CC} range and case temperature range of -55°C to +125°C. Unused inputs must be held high or low.

3. REQUIREMENTS

3.1 Item requirements. The individual item requirements for device classes Q and V shall be in accordance with MIL-PRF-38535 as specified herein, or as modified in the device manufacturer's Quality Management (QM) plan. The modification in the QM plan shall not affect the form, fit, or function as described herein.

3.2 Design, construction, and physical dimensions. The design, construction, and physical dimensions shall be as specified in MIL-PRF-38535 and herein for device classes Q and V.

3.2.1 Case outlines. The case outlines shall be in accordance with 1.2.4 herein.

3.2.2 Terminal connections. The terminal connections shall be as specified on figure 1.

3.2.3 Truth table. The truth table shall be as specified on figure 2.

3.2.4 Logic diagram. The logic diagram shall be as specified on figure 3.

3.2.5 Switching waveforms and test circuit. The switching waveforms and test circuit shall be as specified on figure 4.

3.3 Electrical performance characteristics and postirradiation parameter limits. Unless otherwise specified herein, the electrical performance characteristics and postirradiation parameter limits are as specified in table I and shall apply over the full case operating temperature range.

3.4 Electrical test requirements. The electrical test requirements shall be the subgroups specified in table II. The electrical tests for each subgroup are defined in table I.

3.5 Marking. The part shall be marked with the PIN listed in 1.2 herein. In addition, the manufacturer's PIN may also be marked. For packages where marking of the entire SMD PIN number is not feasible due to space limitations, the manufacturer has the option of not marking the "5962-" on the device. For RHA product using this option, the RHA designator shall still be marked. Marking for device classes Q and V shall be in accordance with MIL-PRF-38535.

3.5.1 Certification/compliance mark. The certification mark for device classes Q and V shall be a "QML" or "Q" as required in MIL-PRF-38535.

3.6 Certificate of compliance. For device classes Q and V, a certificate of compliance shall be required from a QML-38535 listed manufacturer in order to supply to the requirements of this drawing (see 6.6.1 herein). The certificate of compliance submitted to DLA Land and Maritime-VA prior to listing as an approved source of supply for this drawing shall affirm that the manufacturer's product meets, for device classes Q and V, the requirements of MIL-PRF-38535 and herein.

3.7 Certificate of conformance. A certificate of conformance as required for device classes Q and V in MIL-PRF-38535 shall be provided with each lot of microcircuits delivered to this drawing.

TABLE I. Electrical performance characteristics.

Test 1/	Symbol	Conditions 2/ $-55°C \le T_C \le +125°C$ unless otherwise specified	V_{CC}	Group A subgroups	Device type	Limits 3/		Unit
						Min	Max	
High-level input voltage	V_{IH}		4.5 V	1, 2, 3	01	2.0		V
Low-level input voltage	V_{IL}		4.5 V	1, 2, 3	01		0.7	V
Input clamp voltage	V_{IK}	I_I = -18 mA	4.5 V	1, 2, 3	01		-1.5	V
High level output voltage	V_{OH}	V_{IH} = 2.0 V, V_{IL} = 0.7 V, I_{OH} = -400 µA	4.5 V	1, 2, 3	01	2.5		V
Low level output voltage	V_{OL}	V_{IH} = 2.0 V, V_{IL} = 0.7 V, I_{OL} = 4 mA	4.5 V	1, 2, 3	01		0.4	V
Input current at maximum input voltage	I_I	V_I = 7.0 V	5.5 V	1, 2, 3	01		0.1	mA
Input current, high	I_{IH}	V_I = 2.7 V	5.5 V	1, 2, 3	01		20.0	
Input current, low	I_{IL}	V_I = 0.4 V	5.5 V	1, 2, 3	01		-0.4	
Short circuit output current	I_{OS} 4/		5.5 V	1, 2, 3	01	-20	-100	mA
Supply current	I_{CC} 5/		5.5 V	1, 2, 3	01		10.0	mA
Functional test	6/	V_{IN} = V_{IH} min or V_{IL} max Verify output V_O See 4.4.1b	4.5 V	7, 8	01	L	H	
			5.5 V	7, 8	01	L	H	

See footnotes at end of table.

TABLE I. Electrical performance characteristics. - Continued.

Test 1/	Symbol	Conditions 2/ $-55°C \le T_C \le +125°C$ unless otherwise specified	V_{CC}	Group A subgroups	Device type	Limits 3/		Unit
						Min	Max	
Propagation delay time, A, B, $2\overline{C}$, $1\overline{G}$, or $2\overline{G}$ to Y	t_{PLH1}	C_L = 15 pF minimum, R_L =2 kΩ, 7/	5.0 V	9	01		15	V
	t_{PHL1}		5.0 V	9	01		30	V
Propagation delay time, A or B to Y	t_{PLH2}		5.0 V	9	01		26	V
	t_{PHL2}		5.0 V	9	01		30	V
Propagation delay time, 1C to Y	t_{PLH3}		5.0 V	9	01		27	ns
	t_{PHL3}		5.0 V	9	01		27	ns

1/ For tests not listed in the referenced MIL-STD-883 (e.g. ΔI_{CC}), utilize the general test procedure of 883 under the conditions listed herein.

2/ Each input/output, as applicable, shall be tested at the specified temperature, for the specified limits, to the tests in table I herein. Output terminals not designated shall be high level logic, low level logic, or open, except for all I_{CC} tests, where the output terminals shall be open. When performing these tests, the current meter shall be placed in the circuit such that all current flows through the meter. For input terminals not designated, V_{IN} = GND or $V_{IN} \ge 3.0$ V.

3/ For negative and positive voltage and current values, the sign designates the potential difference in reference to GND and the direction of current flow, respectively, and the absolute value of the magnitude, not the sign, is relative to the minimum and maximum limits, as applicable, listed herein.

4/ Not more than one output should be shorted at a time, and the duration of the short-circuit should not exceed one second.

5/ I_{CC} is measured with outputs open, A, B, and 1C inputs at 4.5 V, and $2\overline{C}$, $1\overline{G}$, and $2\overline{G}$ inputs grounded.

6/ Tests shall be performed in sequence, attributes data only. Functional tests shall include the truth table and other logic patterns used for fault detection. The test vectors used to verify the truth table shall, at a minimum, test all functions of each input and output. All possible input to output logic patterns per function shall be guaranteed, if not tested, to the truth table in figure 2 herein. Functional tests shall be performed in sequence as approved by the qualifying activity on qualified devices. Allowable tolerances per MIL-STD-883 may be incorporated. For outputs, L ≤ 0.7 V, H ≥ 2.0 V.

7/ Load circuits and voltage waveforms are shown on figure 4.

Case outlines	E, F	2
Terminal number	Terminal symbol	
1	1C	NC
2	$1\overline{G}$	1C
3	B	$1\overline{G}$
4	1Y3	B
5	1Y2	1Y3
6	1Y1	NC
7	1Y0	1Y2
8	GND	1Y1
9	2Y0	1Y0
10	2Y1	GND
11	2Y2	NC
12	2Y3	2Y0
13	A	2Y1
14	$2\overline{G}$	2Y2
15	$2\overline{C}$	2Y3
16	V_{CC}	NC
17		A
18		$2\overline{G}$
19		$2\overline{C}$
20		V_{CC}

Pin description	
Terminal symbol	Description
1C, $2\overline{C}$	Data input
$1\overline{G}$, $2\overline{G}$	Strobe
A, B	Select
1Y0, 1Y1, 1Y2, 1Y3, 2Y0, 2Y1, 2Y2, 2Y3	Output

FIGURE 1 Terminal connections.

2-line to 4-line Decoder
or 1-line to 4-line Demultiplexer

INPUTS				OUTPUTS			
SELECT		STROBE	DATA				
B	A	$1\overline{G}$	1C	1Y0	1Y1	1Y2	1Y3
X	X	H	X	H	H	H	H
L	L	L	H	L	H	H	H
L	H	L	H	H	L	H	H
H	L	L	H	H	H	L	H
H	H	L	H	H	H	H	L
X	X	X	L	H	H	H	H

INPUTS				OUTPUTS			
SELECT		STROBE	DATA				
B	A	$2\overline{G}$	$2\overline{C}$	2Y0	2Y1	2Y2	2Y3
X	X	H	X	H	H	H	H
L	L	L	L	L	H	H	H
L	H	L	L	H	L	H	H
H	L	L	L	H	H	L	H
H	H	L	L	H	H	H	L
X	X	X	H	H	H	H	H

FIGURE 2. Truth tables.

3-line to 8-line Decoder
or 1-line to 8-line Demultiplexer

INPUTS				OUTPUTS							
SELECT			STROBE OR DATA								
C 1/	B	A	$\overline{G}$ 2/	[0] 2Y0	[1] 2Y1	[2] 2Y2	[3] 2Y3	[4] 1Y0	[5] 1Y1	[6] 1Y2	[7] 1Y3
X	X	X	H	H	H	H	H	H	H	H	H
L	L	L	L	L	H	H	H	H	H	H	H
L	L	H	L	H	L	H	H	H	H	H	H
L	H	L	L	H	H	L	H	H	H	H	H
L	H	H	L	H	H	H	L	H	H	H	H
H	L	L	L	H	H	H	H	L	H	H	H
H	L	H	L	H	H	H	H	H	L	H	H
H	H	L	L	H	H	H	H	H	H	L	H
H	H	H	L	H	H	H	H	H	H	H	L

Notes: 1/ C = inputs 1C and 2$\overline{C}$ connected together.
2/ $\overline{G}$ = inputs 1$\overline{G}$ and 2$\overline{G}$ connected together.

H = High
L = Low
X = Irrelevant

FIGURE 2. Truth tables - Continued.

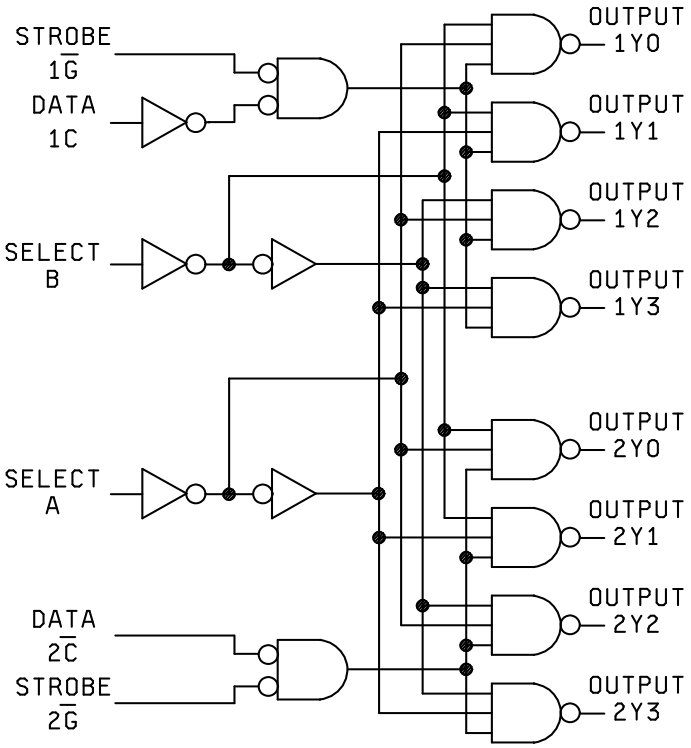

FIGURE 3. Logic diagram.

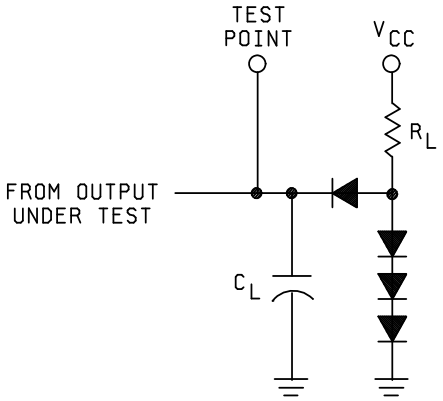

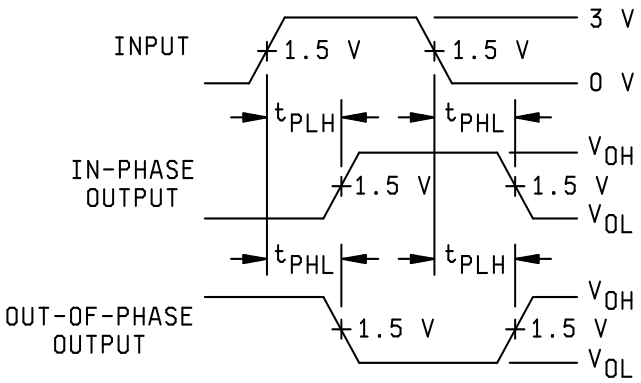

FIGURE 4. Switching waveforms and test circuit.

4. VERIFICATION

4.1 Sampling and inspection. For device classes Q and V, sampling and inspection procedures shall be in accordance with MIL-PRF-38535 or as modified in the device manufacturer's Quality Management (QM) plan. The modification in the QM plan shall not affect the form, fit, or function as described herein.

4.2 Screening. For device classes Q and V, screening shall be in accordance with MIL-PRF-38535, and shall be conducted on all devices prior to qualification and technology conformance inspection.

4.2.1 Additional criteria for device classes Q and V.

a. The burn-in test duration, test condition and test temperature, or approved alternatives shall be as specified in the device manufacturer's QM plan in accordance with MIL-PRF-38535. The burn-in test circuit shall be maintained under document revision level control of the device manufacturer's Technology Review Board (TRB) in accordance with MIL-PRF-38535 and shall be made available to the acquiring or preparing activity upon request. The test circuit shall specify the inputs, outputs, biases, and power dissipation, as applicable, in accordance with the intent specified in method 1015 of MIL-STD-883.

b. Interim and final electrical test parameters shall be as specified in table II herein.

c. Additional screening for device class V beyond the requirements of device class Q shall be as specified in MIL-PRF-38535, appendix B.

4.3 Qualification inspection for device classes Q and V. Qualification inspection for device classes Q and V shall be in accordance with MIL-PRF-38535. Inspections to be performed shall be those specified in MIL-PRF-38535 and herein for groups A, B, C, D, and E inspections (see 4.4.1 through 4.4.4).

4.4 Conformance inspection. Technology conformance inspection for classes Q and V shall be in accordance with MIL-PRF-38535 including groups A, B, C, D, and E inspections, and as specified herein.

4.4.1 Group A inspection.

a. Tests shall be as specified in table II herein.

b. For device classes Q and V, subgroups 7 and 8 shall include verifying the functionality of the device.

c. Subgroups 4, 5, and 6 in table I, method 5005 of MIL-STD-883 shall be omitted.

TABLE II. Electrical test requirements.

Test requirements	Subgroups (in accordance with MIL-PRF-38535, table III)	
	Device class Q	Device class V
Interim electrical parameters (see 4.2)	- - -	- - -
Final electrical parameters (see 4.2)	1/ 1, 2, 3, 7, 8, 9	2/ 1, 2, 3, 7, 8, 9
Group A test requirements (see 4.4)	1, 2, 3, 7, 8, 9	1, 2, 3, 7, 8, 9
Group C end-point electrical parameters (see 4.4)	1, 2, 3	1, 2, 3, 7, 8, 9
Group D end-point electrical parameters (see 4.4)	1, 2, 3	1, 2, 3
Group E end-point electrical parameters (see 4.4)	1, 7, 9	1, 7, 9

1/ PDA applies to subgroup 1.
2/ PDA applies to subgroups 1 and 7.

4.4.2 Group C inspection. The group C inspection end-point electrical parameters shall be as specified in table II herein.

4.4.2.1 Additional criteria for device classes Q and V. The steady-state life test duration, test condition and test temperature, or approved alternatives shall be as specified in the device manufacturer's QM plan in accordance with MIL-PRF-38535. The test circuit shall be maintained under document revision level control by the device manufacturer's TRB in accordance with MIL-PRF-38535 and shall be made available to the acquiring or preparing activity upon request. The test circuit shall specify the inputs, outputs, biases, and power dissipation, as applicable, in accordance with the intent specified in method 1005 of MIL-STD-883.

4.4.3 Group D inspection. The group D inspection end-point electrical parameters shall be as specified in table II herein.

4.4.4 Group E inspection. Group E inspection is required only for parts intended to be marked as radiation hardness assured (see 3.5 herein).

a. End-point electrical parameters shall be as specified in table II herein.

b. For device classes Q and V, the devices or test vehicle shall be subjected to radiation hardness assured tests as specified in MIL-PRF-38535 for the RHA level being tested. All device classes must meet the postirradiation end-point electrical parameter limits as defined in table I at T_A = +25°C ±5°C, after exposure, to the subgroups specified in table II herein.

5. PACKAGING

5.1 Packaging requirements. The requirements for packaging shall be in accordance with MIL-PRF-38535 for device classes Q and V.

6. NOTES

6.1 Intended use. Microcircuits conforming to this drawing are intended for use for Government microcircuit applications (original equipment), design applications, and logistics purposes.

6.1.1 Replaceability. Microcircuits covered by this drawing will replace the same generic device covered by a contractor prepared specification or drawing.

6.2 Configuration control of SMD's. All proposed changes to existing SMD's will be coordinated with the users of record for the individual documents. This coordination will be accomplished using DD Form 1692, Engineering Change Proposal.

6.3 Record of users. Military and industrial users should inform DLA Land and Maritime when a system application requires configuration control and which SMD's are applicable to that system. DLA Land and Maritime will maintain a record of users and this list will be used for coordination and distribution of changes to the drawings. Users of drawings covering microelectronic devices (FSC 5962) should contact DLA Land and Maritime-VA, telephone (614) 692-8108.

6.4 Comments. Comments on this drawing should be directed to DLA Land and Maritime-VA, Columbus, Ohio 43218-3990, or telephone (614) 692-0540.

6.5 Abbreviations, symbols, and definitions. The abbreviations, symbols, and definitions used herein are defined in MIL-PRF-38535 and MIL-HDBK-1331.

6.6 Sources of supply.

6.6.1 Sources of supply for device classes Q and V. Sources of supply for device classes Q and V are listed in MIL-HDBK-103 and QML-38535. The vendors listed in QML-38535 have submitted a certificate of compliance (see 3.6 herein) to DLA Land and Maritime-VA and have agreed to this drawing.

STANDARD MICROCIRCUIT DRAWING BULLETIN

DATE: 16-01-29

Approved sources of supply for SMD 5962-97508 are listed below for immediate acquisition information only and shall be added to MIL-HDBK-103 and QML-38535 during the next revision. MIL-HDBK-103 and QML-38535 will be revised to include the addition or deletion of sources. The vendors listed below have agreed to this drawing and a certificate of compliance has been submitted to and accepted by DLA Land and Maritime-VA. This information bulletin is superseded by the next dated revision of MIL-HDBK-103 and QML-38535. DLA Land and Maritime maintains an online database of all current sources of supply at http://www.landandmaritime.dla.mil/Programs/Smcr/.

Standard microcircuit drawing PIN 1/	Vendor CAGE number	Vendor similar PIN 2/
5962-9750801QEA	01295	SNJ54LS155AJ
5962-9750801QFA	01295	SNJ54LS155AW
5962-9750801Q2A	3/	SNJ54LS155AFK

1/ The lead finish shown for each PIN representing a hermetic package is the most readily available from the manufacturer listed for that part. If the desired lead finish is not listed contact the vendor to determine its availability.
2/ Caution. Do not use this number for item acquisition. Items acquired to this number may not satisfy the performance requirements of this drawing.
3/ Not available from an approved source of supply.

Vendor CAGE number	Vendor name and address
01295	Texas Instruments, Inc. Semiconductor Group 8505 Forest Ln. P.O. Box 660199 Dallas, TX 75243

The information contained herein is disseminated for convenience only and the Government assumes no liability whatsoever for any inaccuracies in the information bulletin.