REVISIONS			
LTR	DESCRIPTION	DATE (YR-MO-DA)	APPROVED
A	Correct V_{IN} test condition for input current I_{IN} of A port in table I. Correct footnote 2/ in table I. Correct the truth table in figure 2. Correct logic diagram in figure 3. Update boilerplate to MIL-PRF-38535 requirements. Editorial changes throughout. – LTG	03-02-04	Thomas M. Hess
B	Update boilerplate paragraphs to the current MIL-PRF-38535 requirements. - LTG	10-07-27	Thomas M. Hess
C	Update boilerplate paragraphs to the current MIL-PRF-38535 requirements. Delete class M requirement throughout. - LTG	16-09-21	Thomas M. Hess

REV																				
SHEET																				
REV	C	C	C	C	C	C														
SHEET	15	16	17	18	19	20														

REV STATUS	REV	C	C	C	C	C	C	C	C	C	C	C	C	C
OF SHEETS	SHEET	1	2	3	4	5	6	7	8	9	10	11	12	13	14

PMIC N/A

PREPARED BY
Joseph A. Kerby

STANDARD MICROCIRCUIT DRAWING

THIS DRAWING IS AVAILABLE FOR USE BY ALL DEPARTMENTS AND AGENCIES OF THE DEPARTMENT OF DEFENSE

AMSC N/A

CHECKED BY
Charles F. Saffle, Jr

APPROVED BY
Monica L. Poelking

DRAWING APPROVAL DATE
97-06-13

REVISION LEVEL
C

DLA LAND AND MARITIME
COLUMBUS, OHIO 43218-3990
http://www.landandmaritime.dla.mil

MICROCIRCUIT, DIGITAL, LOW VOLTAGE CMOS, 18-BIT GTL/LVT UNIVERSAL BUS TRANSCEIVER WITH THREE-STATE OUTPUTS, MONOLITHIC SILICON

SIZE	CAGE CODE	
A	**67268**	**5962-96890**

SHEET 1 OF 20

1. SCOPE

1.1 Scope. This drawing documents two product assurance class levels consisting of high reliability (device class Q) and space application (device class V). A choice of case outlines and lead finishes are available and are reflected in the Part or Identifying Number (PIN). When available, a choice of Radiation Hardness Assurance (RHA) levels is reflected in the PIN.

1.2 PIN. The PIN is as shown in the following example:

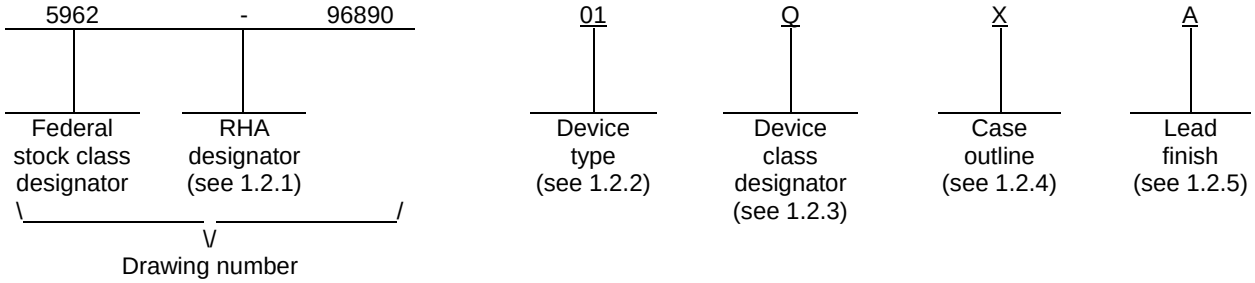

1.2.1 RHA designator. Device classes Q and V RHA marked devices meet the MIL-PRF-38535 specified RHA levels and are marked with the appropriate RHA designator. A dash (-) indicates a non-RHA device.

1.2.2 Device type(s). The device type(s) identify the circuit function as follows:

Device type	Generic number	Circuit function
01	54GTL16612	18-Bit GTL/LVT universal bus transceiver

1.2.3 Device class designator. The device class designator is a single letter identifying the product assurance level as follows:

Device class	Device requirements documentation
Q or V	Certification and qualification to MIL-PRF-38535

1.2.4 Case outline(s). The case outline(s) are as designated in MIL-STD-1835 and as follows:

Outline letter	Descriptive designator	Terminals	Package style
X	GDFP1-F56	56	Flat pack

1.2.5 Lead finish. The lead finish is as specified in MIL-PRF-38535 for device classes Q and V.

1.3 Absolute maximum ratings. 1/ 2/ 3/

Supply voltage ranges (V_{CC}):
3.3 V supply ..... -0.5 V dc to +4.6 V dc
5.0 V supply ..... -0.5 V dc to +7.0 V dc
DC input voltage range (V_{IN}):
A port ..... -0.5 V dc to +7.0 V dc 4/
B port ..... -0.5 V dc to +4.6 V dc 4/
DC output voltage range in the high or power-off state (V_{OUT}):
A port ..... -0.5 V dc to 7.0 V dc 4/
B port ..... -0.5 V dc to +4.6 V dc 4/
Current into any output in the low state (I_O):
A port ..... +128 mA
B port ..... +80 mA
Current into any A-port output in the high state (I_O) ..... +64 mA 5/
DC input clamp current (I_{IK}) (V_{IN} < 0.0) ..... -50 mA
DC output clamp current (I_{OK}) (V_{OUT} < 0.0) ..... -50 mA
Maximum power dissipation (P_D) at T_A = +55°C (in still air) ..... 1.0 W 6/
Storage temperature range (T_{STG}) ..... -65°C to +150°C
Lead temperature (soldering, 10 seconds) ..... +300°C
Thermal resistance, junction-to-case (θ_{JC}) ..... See MIL-STD-1835
Junction temperature (T_J) ..... +150°C

1.4 Recommended operating conditions. 2/ 3/ 7/

Supply voltage range (V_{CC}):
3.3 V supply ..... +3.15 V dc to +3.45 V dc
5.0 V supply ..... +4.75 V dc to +5.25 V dc
Supply voltage reference (V_{REF}) ..... 0.8 V dc
Maximum input voltage (V_{IN}):
B port ..... V_{CC} (3.3 V)
except B port ..... 5.5 V
Minimum high level input voltage (V_{IH}):
B port ..... V_{REF} + 50 mV
except B port ..... +2.0 V
Maximum low level input voltage (V_{IL}):
B port ..... V_{REF} - 50 mV
except B port ..... +0.8 V
Input clamp current (I_{IK}) ..... -18mA
Maximum high level output current (I_{OH}) A port ..... -32 mA
Maximum low level output current (I_{OL}):
A port ..... +64 mA
B port ..... +40 mA
Case operating temperature range (T_C) ..... -55°C to +125°C

1/ Stresses above the absolute maximum rating may cause permanent damage to the device. Extended operation at the maximum levels may degrade performance and affect reliability.
2/ Unless otherwise noted, all voltages are referenced to GND.
3/ The limits for the parameters specified herein shall apply over the full specified V_{CC} range and case temperature range of -55°C to +125°C.
4/ The input and output negative voltage ratings may be exceeded provided that the input and output clamp current ratings are observed.
5/ This current flows only when the output is in the high state and $V_{OUT} > V_{CC}$.
6/ The maximum package power dissipation is calculated using a junction temperature of 150°C and a board trace length of 750 mils.
7/ Unused inputs must be held high or low to prevent them from floating.

2. APPLICABLE DOCUMENTS

2.1 Government specification, standards, and handbooks. The following specification, standards, and handbooks form a part of this drawing to the extent specified herein. Unless otherwise specified, the issues of these documents are those cited in the solicitation or contract.

DEPARTMENT OF DEFENSE SPECIFICATION

MIL-PRF-38535 - Integrated Circuits, Manufacturing, General Specification for.

DEPARTMENT OF DEFENSE STANDARDS

MIL-STD-883 - Test Method Standard Microcircuits.
MIL-STD-1835 - Interface Standard Electronic Component Case Outlines.

DEPARTMENT OF DEFENSE HANDBOOKS

MIL-HDBK-103 - List of Standard Microcircuit Drawings.
MIL-HDBK-780 - Standard Microcircuit Drawings.

(Copies of these documents are available online at http://quicksearch.dla.mil or from the Standardization Document Order Desk, 700 Robbins Avenue, Building 4D, Philadelphia, PA 19111-5094).

2.2 Order of precedence. In the event of a conflict between the text of this drawing and the references cited herein, the text of this drawing takes precedence. Nothing in this document, however, supersedes applicable laws and regulations unless a specific exemption has been obtained.

3. REQUIREMENTS

3.1 Item requirements. The individual item requirements for device classes Q and V shall be in accordance with MIL-PRF-38535 as specified herein, or as modified in the device manufacturer's Quality Management (QM) plan. The modification in the QM plan shall not affect the form, fit, or function as described herein.

3.2 Design, construction, and physical dimensions. The design, construction, and physical dimensions shall be as specified in MIL-PRF-38535 and herein for device classes Q and V.

3.2.1 Case outline. The case outline shall be in accordance with 1.2.4 herein.

3.2.2 Terminal connections. The terminal connections shall be as specified on figure 1.

3.2.3 Truth table. The truth table shall be as specified on figure 2.

3.2.4 Logic diagram. The logic diagram shall be as specified on figure 3.

3.2.5 Ground bounce test circuit and waveforms. The ground bounce test circuit and waveforms shall be as specified on figure 4.

3.2.6 Switching waveforms and test circuit. The switching waveforms and test circuit shall be as specified on figure 5.

3.3 Electrical performance characteristics and postirradiation parameter limits. Unless otherwise specified herein, the electrical performance characteristics and postirradiation parameter limits are as specified in table I and shall apply over the full case operating temperature range.

3.4 Electrical test requirements. The electrical test requirements shall be the subgroups specified in table II. The electrical tests for each subgroup are defined in table I.

3.5 Marking. The part shall be marked with the PIN listed in 1.2 herein. In addition, the manufacturer's PIN may also be marked. For packages where marking of the entire SMD PIN number is not feasible due to space limitations, the manufacturer has the option of not marking the "5962-" on the device. For RHA product using this option, the RHA designator shall still be marked. Marking for device classes Q and V shall be in accordance with MIL-PRF-38535.

3.5.1 Certification/compliance mark. The certification mark for device classes Q and V shall be a "QML" or "Q" as required in MIL-PRF-38535.

3.6 Certificate of compliance. For device classes Q and V, a certificate of compliance shall be required from a QML-38535 listed manufacturer in order to supply to the requirements of this drawing (see 6.6.1 herein). The certificate of compliance submitted to DLA Land and Maritime-VA prior to listing as an approved source of supply for this drawing shall affirm that the manufacturer's product meets, for device classes Q and V, the requirements of MIL-PRF-38535 and herein.

3.7 Certificate of conformance. A certificate of conformance as required for device classes Q and V in MIL-PRF-38535 shall be provided with each lot of microcircuits delivered to this drawing.

TABLE I. Electrical performance characteristics.

Test and MIL-STD-883 test method 1/	Symbol	Test conditions 2/ 3/ -55°C ≤ T_C ≤ +125°C For 3.3 V supply: +3.15 V ≤ V_{CC} ≤ +3.45 V For 5.0 V supply: +4.75 ≤ V_{CC} ≤ +5.25 V unless otherwise specified		Group A subgroups	Limits 4/		Unit
					Min	Max	
Input clamp voltage 3022	V_{IK}	For input under test, I_{IN} = -18 mA V_{CC} (3.3 V) =3.15 V V_{CC} (5.0 V) = 4.75 V		1, 2, 3		-1.2	V
High level output voltage 3006	V_{OH}	A port For all inputs affecting output under test V_{IN} = V_{IH} or V_{IL} For all other inputs V_{IN} = V_{CC} or GND	I_{OH} = -100 μA V_{CC} (3.3 V) = 3.15 V to 3.45 V V_{CC} (5.0 V) =4.75 V to 5.25 V	1, 2, 3	V_{CC}-0.2		V
			I_{OH} = -8 mA V_{CC} (3.3 V) =3.15 V V_{CC} (5.0 V) = 4.75 V		2.4		
			I_{OH} = -32 mA V_{CC} (3.3 V) =3.15 V V_{CC} (5.0 V) = 4.75 V		2.0		
Low level output voltage 3007	V_{OL}	A port For all inputs affecting output under test V_{IN} = V_{IH} or V_{IL} For all other inputs V_{IN} = V_{CC} or GND	I_{OL}= 100 μA V_{CC} (3.3 V) =3.15 V V_{CC} (5.0 V) = 4.75 V	1, 2, 3		0.2	V
			I_{OL} = 16 mA V_{CC} (3.3 V) =3.15 V V_{CC} (5.0 V) = 4.75 V			0.4	V
			I_{OL} = 32 mA V_{CC} (3.3 V) = 3.15 V to 3.45 V V_{CC} (5.0 V) =4.75 V to 5.25 V	1, 2, 3		0.5	V
			I_{OL} = 64 mA V_{CC} (3.3 V) =3.15 V V_{CC} (5.0 V) = 4.75 V			0.6	
		B port For all inputs affecting output under test V_{IN} = V_{IH} or V_{IL} For all other inputs V_{IN} = V_{CC} or GND	I_{OL} = 40 mA V_{CC} (3.3 V) =3.15 V V_{CC} (5.0 V) = 4.75 V			0.5	

See footnotes at end of table.

TABLE I. Electrical performance characteristics - Continued.

Test and MIL-STD-883 test method 1/	Symbol	Test conditions 2/ 3/ -55°C ≤ T_C ≤ +125°C For 3.3 V supply: +3.15 V ≤ V_{CC} ≤ +3.45 V For 5.0 V supply: +4.75 ≤ V_{CC} ≤ +5.25 V unless otherwise specified	Group A subgroups	Limits 4/		Unit
				Min	Max	
Input current	I_{IN}	Control input For input under test V_{IN} = 5.5 V V_{CC} (3.3 V) = 0.0 V or 3.45 V V_{CC} (5.0 V) = 0.0 V or 5.25 V	1, 2, 3		10.0	µA
		A port For input under test V_{IN} = 5.5 V V_{CC} (3.3 V) =3.45 V V_{CC} (5.0 V) = 5.25 V			1.0	mA
		A port For input under test V_{IN} = V_{CC} (3.3 V) V_{CC} (3.3 V) =3.45 V V_{CC} (5.0 V) = 5.25 V			1.0	µA
		A port For input under test V_{IN} = 0.0 V V_{CC} (3.3 V) =3.45 V V_{CC} (5.0 V) = 5.25 V	1, 2, 3		-30.0	µA
		B port For input under test V_{IN} = V_{CC} (3.3 V) V_{CC} (3.3 V) =3.45 V V_{CC} (5.0 V) = 5.25 V			5.0	
		B port For input under test V_{IN} = 0.0 V V_{CC} (3.3 V) =3.45 V V_{CC} (5.0 V) = 5.25 V			-5.0	
Offstate leakage current	I_{OFF}	V_{IN} or V_{OUT} = 0.0 V to 4.5 V V_{CC} (3.3 V) and (5.0 V) = 0.0 V	1, 2, 3		1.0	mA
Input bus hold current	$I_{I(HOLD)}$	A port V_{IN} = 0.8 V V_{CC} (3.3 V) =3.15 V V_{CC} (5.0 V) = 4.75 V	1, 2, 3	75.0		µA
		A port V_{IN} =2.0 V V_{CC} (3.3 V) =3.15 V V_{CC} (5.0 V) = 4.75 V		-75.0		
Three-state output leakage current high 3021	I_{OZH}	A port V_{OUT} = 3.0 V V_{CC} (3.3 V) =3.45 V V_{CC} (5.0 V) = 5.25 V	1, 2, 3		1.0	µA
		B port V_{OUT} = 1.2 V V_{CC} (3.3 V) =3.45 V V_{CC} (5.0 V) = 5.25 V			10.0	

See footnotes at end of table.

TABLE I. Electrical performance characteristics - Continued.

Test and MIL-STD-883 test method 1/	Symbol	Test conditions 2/ 3/ -55°C ≤ T_C ≤ +125°C For 3.3 V supply: +3.15 V ≤ V_{CC} ≤ +3.45 V For 5.0 V supply: +4.75 ≤ V_{CC} ≤ +5.25 V unless otherwise specified		Group A subgroups	Limits 4/ Min	Limits 4/ Max	Unit
Three-state output leakage current low 3020	I_{OZL}	A port V_{OUT} = 0.5 V V_{CC} (3.3 V) =3.45 V V_{CC} (5.0 V) = 5.25 V		1, 2, 3		-1.0	µA
		B port V_{OUT} = 0.4 V V_{CC} (3.3 V) =3.45 V V_{CC} (5.0 V) = 5.25 V		1, 2, 3		-10.0	
Quiescent supply current 3005	I_{CC} (3.3 V)	A or B port For all inputs V_{IN} = 3.3 V or GND I_{OUT} = 0.0 A	Outputs high V_{CC} (3.3 V) =3.45 V V_{CC} (5.0 V) = 5.25 V	1, 2, 3		1.0	mA
			Outputs low V_{CC} (3.3 V) =3.45 V V_{CC} (5.0 V) = 5.25 V			5.0	
			Outputs Disabled V_{CC} (3.3 V) =3.45 V V_{CC} (5.0 V) = 5.25 V			1.0	
Quiescent supply current 3005	I_{CC} (5.0 V)	A or B port For all inputs V_{IN} = V_{CC} (3.3 V) or GND I_{OUT} = 0.0 A	Outputs high V_{CC} (3.3 V) =3.45 V V_{CC} (5.0 V) = 5.25 V	1, 2, 3		120.0	mA
			Outputs low V_{CC} (3.3 V) =3.45 V V_{CC} (5.0 V) = 5.25 V			120.0	
			Outputs disabled V_{CC} (3.3 V) =3.45 V V_{CC} (5.0 V) = 5.25 V			120.0	
Quiescent supply current delta, TTL input levels 3005	ΔI_{CC} 5/	For input under test, V_{IN} = 2.7 V, A port or control inputs at V_{CC} (3.3 V) or GND V_{CC} (3.3 V) =3.45 V V_{CC} (5.0 V) = 5.25 V		1, 2, 3		1.0	mA
Input capacitance 3012	C_{IN}	Control inputs V_{IN} = 3.15 V or 0.0 V T_C = +25°C See 4.4.1c V_{CC} (3.3 V) = 3.3 V V_{CC} (5.0 V) = 5.0 V		4		12.0	pF

See footnotes at end of table.

TABLE I. Electrical performance characteristics - Continued.

Test and MIL-STD-883 test method 1/	Symbol	Test conditions 2/ 3/ -55°C ≤ T_C ≤ +125°C For 3.3 V supply: +3.15 V ≤ V_{CC} ≤ +3.45 V For 5.0 V supply: +4.75 ≤ V_{CC} ≤ +5.25 V unless otherwise specified	Group A subgroups	Limits 4/ Min	Limits 4/ Max	Unit
I/O port capacitance 3012	$C_{I/O}$	A port V_{OUT} = 3.15 V or 0.0 V T_C = +25°C V_{CC} (3.3 V) = 3.3 V V_{CC} (5.0 V) = 5.0 V	4		18.0	pF
		B port T_C = +25°C See 4.4.1c V_{CC} (3.3 V) = 3.3 V V_{CC} (5.0 V) = 5.0 V	4		10.0	pF
Power dissipation capacitance per transceiver	C_{PD}	C_L = 50 pF minimum f = 10 MHz See 4.4.1c Outputs Enabled V_{CC} (3.3 V) = 3.3 V V_{CC} (5.0 V) = 5.0 V	4		18.0	pF
Low level ground bounce noise	V_{OLP} 6/	V_{IH} = 1.2 V, V_{IL} = 0.0 V T_A = +25°C See 4.4.1d See figure 4 A port only 7/ V_{CC} (3.3 V) = 3.3 V V_{CC} (5.0 V) = 5.0 V	4		1300	mV
Low level ground bounce noise	V_{OLV} 6/				-1000	
High level V_{CC} bounce noise	V_{OHP} 6/				750	
High level V_{CC} bounce noise	V_{OHV} 6/				-1000	
Functional test 3014	8/	V_{IN} = V_{IH} or V_{IL} Verify output V_{OUT} See 4.4.1b V_{CC} (3.3 V) = 3.15 V, 3.3 V and 3.45 V V_{CC} (5.0 V) = 4.75 V, 5.0 V and 5.25 V	7, 8	L	H	
Clock frequency	f_{CLOCK}	V_{CC} (3.3 V) = 3.15 V, 3.3 V and 3.45 V V_{CC} (5.0 V) = 4.75 V, 5.0 V and 5.25 V	9, 10,11	0	95.0	MHz
Pulse duration	t_w	LEAB or LEBA high V_{CC} (3.3 V) = 3.15 V, 3.3 V and 3.45 V V_{CC} (5.0 V) = 4.75 V, 5.0 V and 5.25 V	9,10,11	3.3		ns
		CLKAB or CLKBA high or low V_{CC} (3.3 V) = 3.15 V, 3.3 V and 3.45 V V_{CC} (5.0 V) = 4.75 V, 5.0 V and 5.25 V		5.6		

See footnotes at end of table.

TABLE I. Electrical performance characteristics - Continued.

Test and MIL-STD-883 test method 1/	Symbol	Test conditions 2/ 3/ -55°C ≤ T_C ≤ +125°C For 3.3 V supply: +3.15 V ≤ V_{CC} ≤ +3.45 V For 5.0 V supply: +4.75 ≤ V_{CC} ≤ +5.25 V unless otherwise specified	Group A subgroups	Limits 4/		Unit
				Min	Max	
Setup time	t_{su}	An before CLKAB↑ V_{CC} (3.3 V) = 3.15 V, 3.3 V and 3.45 V V_{CC} (5.0 V) = 4.75 V, 5.0 V and 5.25 V	9,10,11	1.2		ns
		Bn before CLKBA↑ V_{CC} (3.3 V) = 3.15 V, 3.3 V and 3.45 V V_{CC} (5.0 V) = 4.75 V, 5.0 V and 5.25 V		3.4		
		An before LEAB↓ V_{CC} (3.3 V) = 3.15 V, 3.3 V and 3.45 V V_{CC} (5.0 V) = 4.75 V, 5.0 V and 5.25 V		1.2		
		Bn before LEBA↓ V_{CC} (3.3 V) = 3.15 V, 3.3 V and 3.45 V V_{CC} (5.0 V) = 4.75 V, 5.0 V and 5.25 V		1.0		
		CEAB before CLKAB↑ V_{CC} (3.3 V) = 3.15 V, 3.3 V and 3.45 V V_{CC} (5.0 V) = 4.75 V, 5.0 V and 5.25 V		2.1		
		CEBA before CLKBA↑ V_{CC} (3.3 V) = 3.15 V, 3.3 V and 3.45 V V_{CC} (5.0 V) = 4.75 V, 5.0 V and 5.25 V		2.6		
Hold time	t_h	An after CLKAB↑ V_{CC} (3.3 V) = 3.15 V, 3.3 V and 3.45 V V_{CC} (5.0 V) = 4.75 V, 5.0 V and 5.25 V	9,10,11	2.9		ns
		Bn after CLKBA↑ V_{CC} (3.3 V) = 3.15 V, 3.3 V and 3.45 V V_{CC} (5.0 V) = 4.75 V, 5.0 V and 5.25 V		4.1		
		An after LEAB↓ V_{CC} (3.3 V) = 3.15 V, 3.3 V and 3.45 V V_{CC} (5.0 V) = 4.75 V, 5.0 V and 5.25 V		4.5		
		Bn before LEBA↓ V_{CC} (3.3 V) = 3.15 V, 3.3 V and 3.45 V V_{CC} (5.0 V) = 4.75 V, 5.0 V and 5.25 V		4.3		
		CEAB after CLKAB↑ V_{CC} (3.3 V) = 3.15 V, 3.3 V and 3.45 V V_{CC} (5.0 V) = 4.75 V, 5.0 V and 5.25 V		2.0		
		CEBA after CLKBA↑ V_{CC} (3.3 V) = 3.15 V, 3.3 V and 3.45 V V_{CC} (5.0 V) = 4.75 V, 5.0 V and 5.25 V		1.0		
Maximum operating frequency	f_{max}	V_{CC} (3.3 V) = 3.15 V, 3.3 V and 3.45 V V_{CC} (5.0 V) = 4.75 V, 5.0 V and 5.25 V	9,10,11	95.0		MHz
Propagation delay time, An to Bn 3003	t_{PLH1} 9/	C_L = 50 pF minimum R_L = 500Ω See figure 5 V_{CC} (3.3 V) = 3.15 V, 3.3 V and 3.45 V V_{CC} (5.0 V) = 4.75 V, 5.0 V and 5.25 V	9, 10, 11	1.0	4.5	ns
	t_{PHL1} 9/			1.0	4.5	

See footnotes at end of table.

TABLE I. Electrical performance characteristics - Continued.

Test and MIL-STD-883 test method 1/	Symbol	Test conditions 2/ 3/ -55°C ≤ T_C ≤ +125°C For 3.3 V supply: +3.15 V ≤ V_{CC} ≤ +3.45 V For 5.0 V supply: +4.75 ≤ V_{CC} ≤ +5.25 V unless otherwise specified	Group A subgroups	Limits 4/		Unit
				Min	Max	
Propagation delay time, LEAB to Bn 3003	t_{PLH2} 9/	C_L = 50 pF minimum R_L = 500Ω See figure 5 V_{CC} (3.3 V) = 3.15 V, 3.3 V and 3.45 V V_{CC} (5.0 V) = 4.75 V, 5.0 V and 5.25 V	9, 10, 11	1.0	5.5	ns
	t_{PHL2} 9/			1.0	6.0	
Propagation delay time, CLKAB to Bn 3003	t_{PLH3} 9/		9, 10, 11	1.0	5.5	
	t_{PHL3} 9/			1.0	5.5	
Propagation delay time, output enable, $\overline{OEAB}$ to Bn 3003	t_{PZH1}, t_{PZL1} 9/		9, 10, 11	1.0	5.5	
Propagation delay time, output disable, $\overline{OEAB}$ to Bn 3003	t_{PHZ1}, t_{PLZ1} 9/		9, 10, 11	1.0	5.5	
Propagation delay time, Bn to An 3003	t_{PLH4} 9/		9, 10, 11	2.0	6.9	
	t_{PHL4} 9/			1.0	5.1	
Propagation delay time, LEBA to An 3003	t_{PLH5} 9/		9, 10, 11	2.0	6.1	
	t_{PHL5} 9/			1.0	5.1	
Propagation delay time, CLKBA to An 3003	t_{PLH6} 9/		9, 10, 11	2.0	6.4	
	t_{PHL6} 9/			2.0	5.6	
Propagation delay time output enable, $\overline{OEBA}$ to An 3003	t_{PZH2}, t_{PZL2} 9/		9, 10, 11	1.0	7.5	
Propagation delay time, output disable, $\overline{OEBA}$ to An 3003	t_{PHZ2}, t_{PLZ2} 9/		9, 10, 11	2.0	6.9	

See footnotes on next sheet.

TABLE I. Electrical performance characteristics - Continued.

1/ For tests not listed in the referenced MIL-STD-883 (e.g. ΔI_{CC}), utilize the general test procedure of 883 under the conditions listed herein.

2/ Each input/output, as applicable, shall be tested at the specified temperature, for the specified limits, to the tests in table I herein. Output terminals not designated shall be high level logic, low level logic, or open, except for all I_{CC} and ΔI_{CC} tests, where the output terminals shall be open. When performing these tests, the current meter shall be placed in the circuit such that all current flows through the meter. The values to be used for V_{IH} and V_{IL} shall be the V_{IH} minimum and V_{IL} maximum values listed in section 1.4 herein. For input terminals not designated, V_{IN} = GND or $V_{IN} \geq 3.0$ V.

3/ This device requires both V_{CC} = 3.3 V and V_{CC} = 5.0 V power supplies for operation. The power supply will be indicated in parenthesis (i.e. (3.3 V) or (5.0 V)) followed by the voltage the power supply is set to for the given test. For all tests, V_{REF} = 0.8 V unless otherwise noted.

4/ For negative and positive voltage and current values, the sign designates the potential difference in reference to GND and the direction of current flow, respectively; and the absolute value of the magnitude, not the sign, is relative to the minimum and maximum limits, as applicable, listed herein.

5/ This is the increase in supply current for each input that is at the specified TTL voltage level rather than V_{CC} or GND

6/ This test is for qualification only. Ground and V_{CC} bounce tests are performed on a non-switching (quiescent) output and are used to measure the magnitude of induced noise caused by other simultaneously switching outputs. The test is performed on a low noise bench test fixture. For the device under test, all outputs shall be loaded with 500Ω of load resistance and a minimum of 50 pF of load capacitance (see figure 4). Only chip capacitors and resistors shall be used. The output load components shall be located as close as possible to the device outputs. It is suggested, that whenever possible, this distance be kept to less than 0.25 inches. Decoupling capacitors shall be placed in parallel from V_{CC} to ground. The values of these decoupling capacitors shall be determined by the device manufacturer. The low and high level ground and V_{CC} bounce noise is measured at the quiet output using a 1 GHz minimum bandwidth oscilloscope with a 50Ω input impedance.

The device inputs shall be conditioned such that all outputs are at a high nominal V_{OH} level. The device inputs shall then be conditioned such that they switch simultaneously and the output under test remains at V_{OH} as all other outputs possible are switched from V_{OH} to V_{OL}. V_{OHV} and V_{OHP} are then measured from the nominal V_{OH} level to the largest negative and positive peaks, respectively (see figure 4). This is then repeated with the same outputs not under test switching from V_{OL} to V_{OH}.

The device inputs shall be conditioned such that all outputs are at a low nominal V_{OL} level. The device inputs shall then be conditioned such that they switch simultaneously and the output under test remains at V_{OL} as all other outputs possible are switched from V_{OL} to V_{OH}. V_{OLP} and V_{OLV} are then measured from the nominal V_{OL} level to the largest positive and negative peaks, respectively (see figure 4). This is then repeated with the same outputs not under test switching from V_{OH} to V_{OL}.

7/ Ground bounce test is used on A ports only as B port has open drain outputs.

8/ Tests shall be performed in sequence, attributes data only. Functional tests shall include the truth table and other logic patterns used for fault detection. The test vectors used to verify the truth table shall, at a minimum, test all functions of each input and output. All possible input to output logic patterns per function shall be guaranteed, if not tested, to the truth table in figure 2 herein. Functional tests shall be performed in sequence as approved by the qualifying activity on qualified devices. After incorporating allowable tolerances per MIL-STD-883, V_{IL} = 0.4 V and V_{IH} = 2.4 V. For outputs, L ≤ 0.8 V, H ≥ 2.0 V.

9/ For propagation delay tests, all paths must be tested.

Device type	01		
Case outline	X		
Terminal number	Terminal symbol	Terminal number	Terminal symbol
1	$\overline{\text{OEAB}}$	29	$\overline{\text{CEBA}}$
2	LEAB	30	CLKBA
3	A1	31	B18
4	GND	32	GND
5	A2	33	B17
6	A3	34	B16
7	V_{CC} (3.3V)	35	V_{REF}
8	A4	36	B15
9	A5	37	B14
10	A6	38	B13
11	GND	39	GND
12	A7	40	B12
13	A8	41	B11
14	A9	42	B10
15	A10	43	B9
16	A11	44	B8
17	A12	45	B7
18	GND	46	GND
19	A13	47	B6
20	A14	48	B5
21	A15	49	B4
22	V_{CC} (3.3V)	50	V_{CC} (5.0 V)
23	A16	51	B3
24	A17	52	B2
25	GND	53	GND
26	A18	54	B1
27	$\overline{\text{OEBA}}$	55	$\overline{\text{CLKAB}}$
28	LEBA	56	CEAB

FIGURE 1. Terminal connections.

Device type 01 1/						
Inputs					Output	MODE
$\overline{CEAB}$	$\overline{OEAB}$	$\overline{LEAB}$	CLKAB	An	Bn	
X	H	X	X	X	Z	Isolation
L L	L L	L L	H L	X X	B_0 2/ B_0 3/	Latched storage of An data
X X	L L	H H	X X	L H	L H	Transparent
L L	L L	L L	↑ ↑	L H	L H	Clocked storage of An data
H	L	L	X	X	B_0 3/	Clock inhibit

H = High voltage level
L = Low voltage level
X = Irrelevant
↑ = Low-to-high transition
Z = High impedance state

1/ An-to-Bn data flow is shown. Bn-to-An data flow is similar but uses $\overline{OEBA}$, LEBA, CLKBA AND $\overline{CEBA}$.
2/ Output level before the indicated steady state input conditions were established, provided that CLKAB was high before LEAB went low.
3/ Output level before the indicated steady state input conditions were established.

FIGURE 2. Truth table.

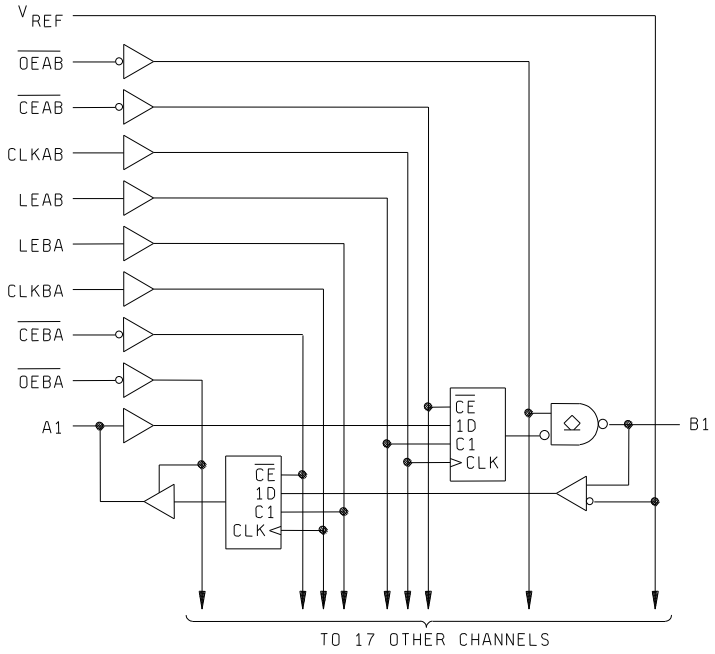

FIGURE 3. Logic diagram.

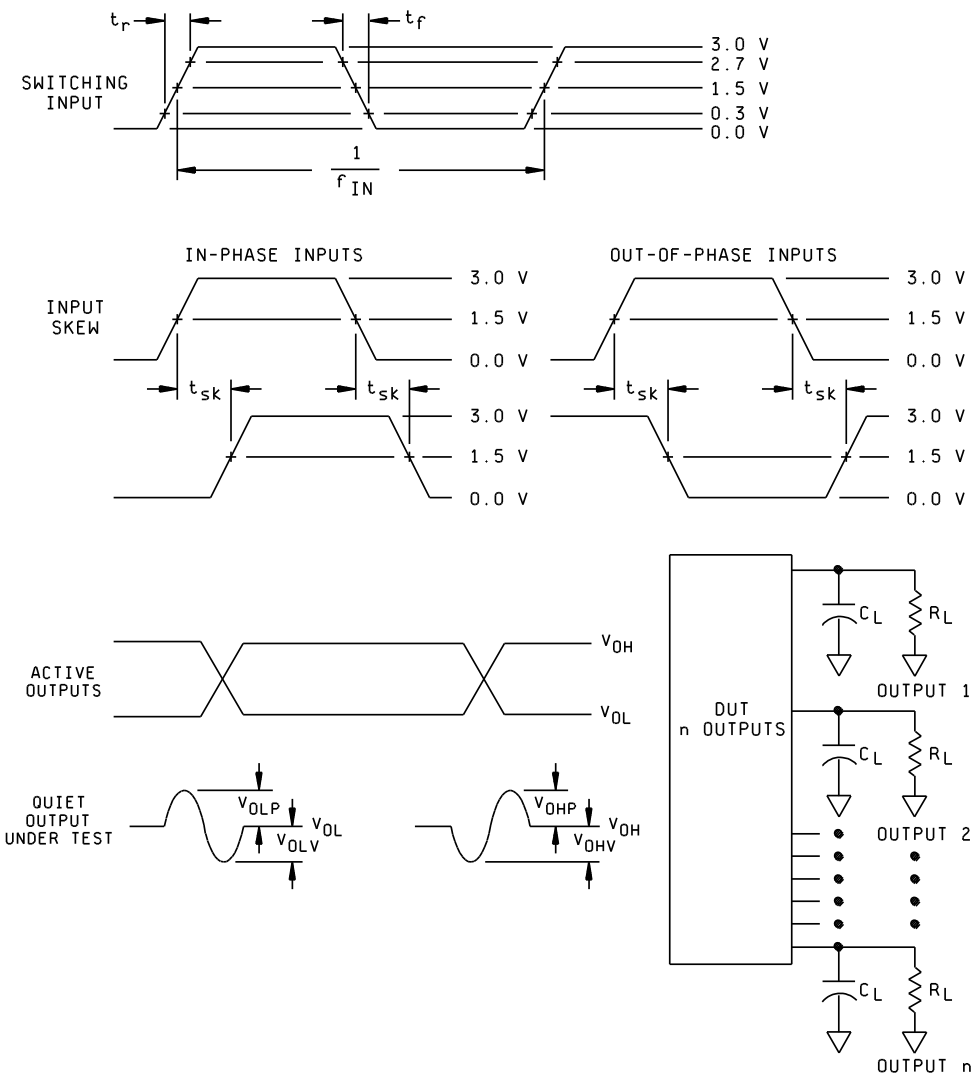

NOTES:

1. C_L includes a 47 pF chip capacitor (-0 percent, +20 percent) and at least 3 pF of equivalent capacitance from the test jig and probe.
2. R_L = 450Ω ±1 percent, chip resistor in series with a 50Ω termination. For monitored outputs, the 50Ω termination shall be the 50Ω characteristic impedance of the coaxial connector to the oscilloscope.
3. Input signal to the device under test:
   a. V_{IN} = 0.0 V to 3.0 V; duty cycle = 50 percent; $f_{IN} \geq$ 10 MHz.
   b. t_r, t_f = 3 ns ±1.0 ns. For input signal generators incapable of maintaining these values of t_r and t_f, the 2.5 ns limit may be increased up to 10 ns, as needed, maintaining the ±1.0 ns tolerance and guaranteeing the results at 2.5 ns ±1.0 ns; skew between any two switching inputs signals (t_{sk}) ≤ 250 ps.

FIGURE 4. Ground bounce test circuit and waveforms.

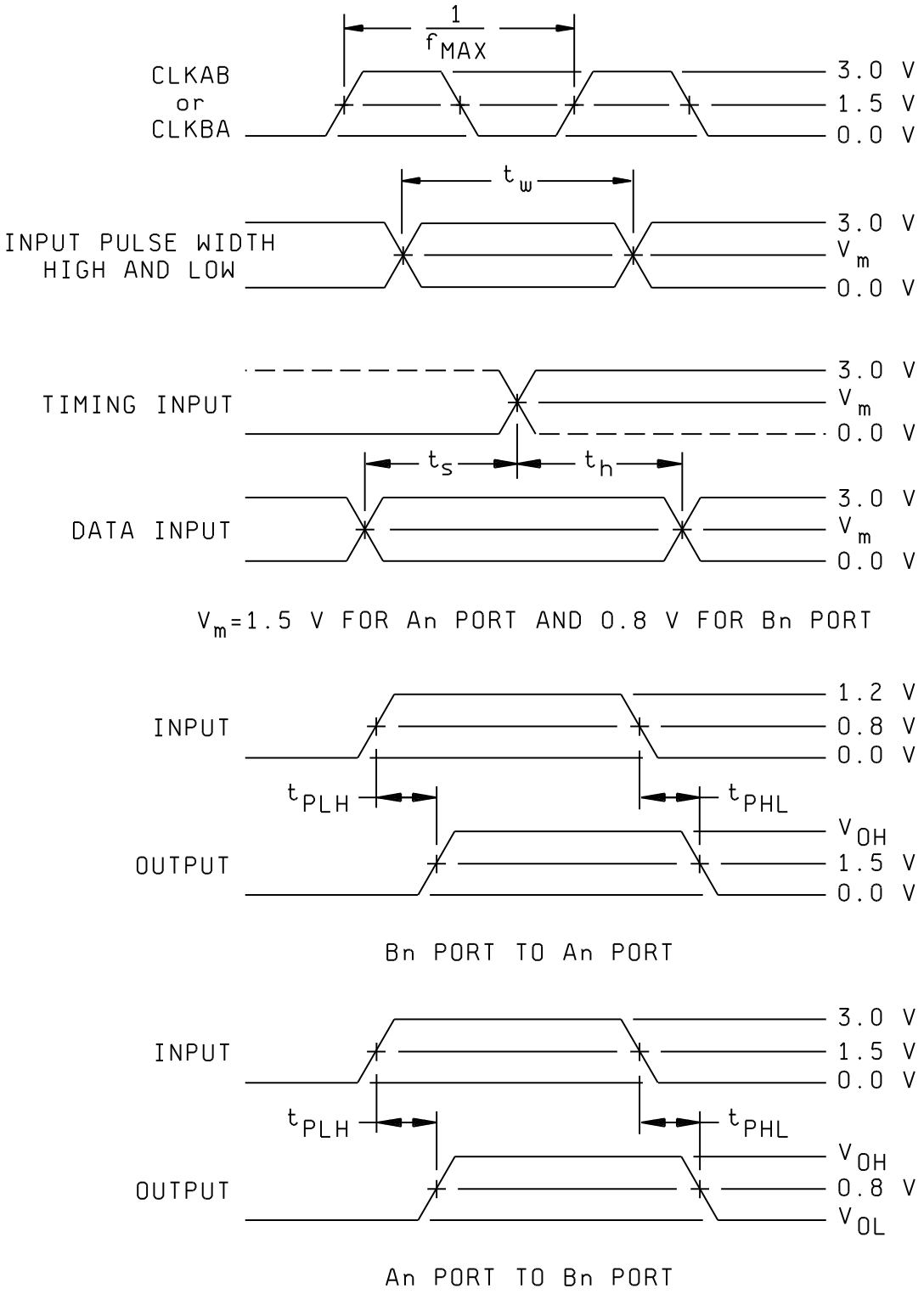

FIGURE 5. Switching waveforms and test circuit.

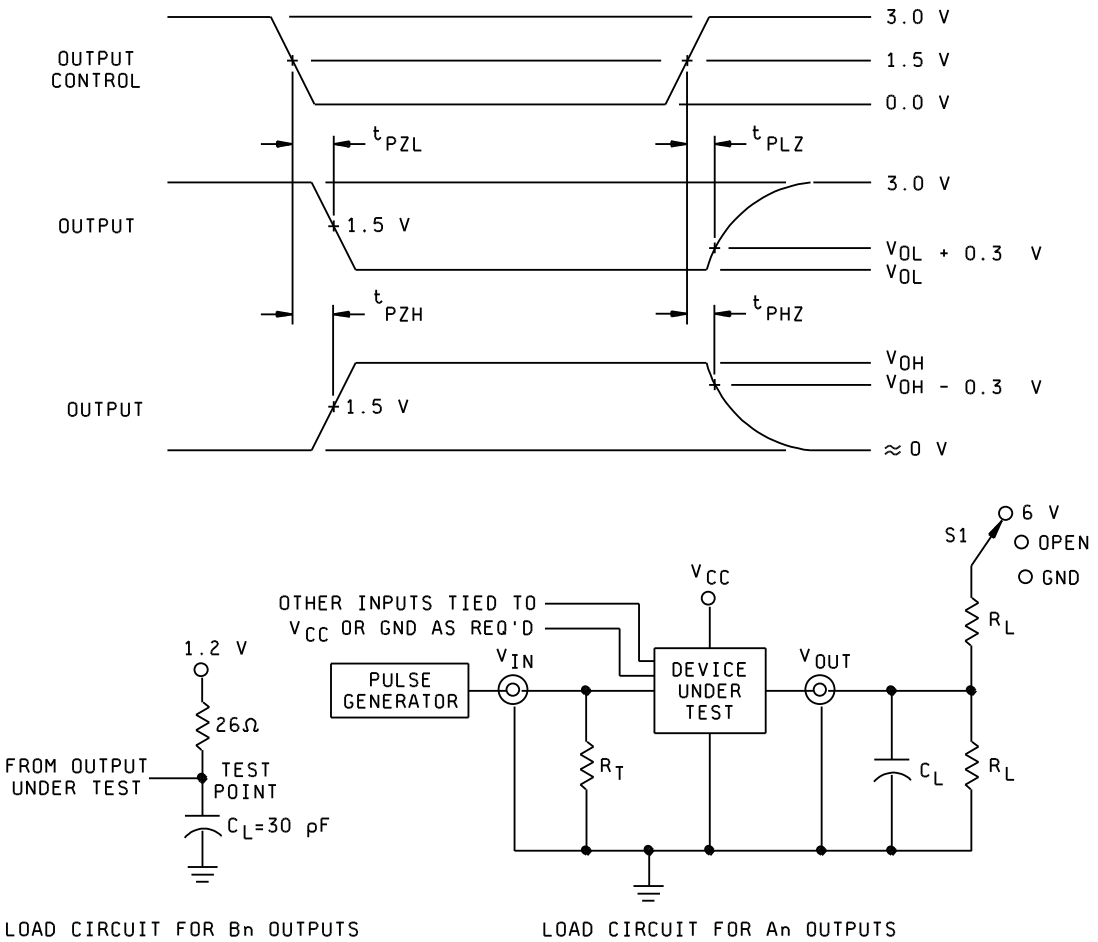

NOTES:

1. When measuring t_{PLH} and t_{PHL}: S1 = Open.
2. When measuring t_{PLZ} and t_{PZL}: S1 = 6.0 V.
3. When measuring t_{PHZ} and t_{PZH}: S1 = GND.
4. The t_{PZL} and t_{PLZ} reference waveform is for the output under test with internal conditions such that the output is low at V_{OL} except when disabled by the output enable control. The t_{PZH} and t_{PHZ} reference waveform is for the output under test with internal conditions such that the output is high at V_{OH} except when disabled by the output enable control.
5. C_L = 50 pF (includes test jig and probe capacitance).
6. R_T = 50Ω or equivalent, R_L = 500Ω.
7. Input signal from pulse generator: V_{IN} = 0.0 V to 3.0 V; PRR ≤ 1 MHz; t_r = 2.5 ns; t_f = 2.5 ns; t_r and t_f shall be measured from 0.3 V to 2.7 V and from 2.7 V to 0.3 V, respectively; duty cycle = 50 percent.
8. Timing parameters shall be tested at a minimum input frequency of 1 MHz.
9. The outputs are measured one at a time with one transition per measurement.

FIGURE 5. Switching waveforms and test circuit - Continued.

4. VERIFICATION

4.1 Sampling and inspection. For device classes Q and V, sampling and inspection procedures shall be in accordance with MIL-PRF-38535 or as modified in the device manufacturer's Quality Management (QM) plan. The modification in the QM plan shall not affect the form, fit, or function as described herein.

4.2 Screening. For device classes Q and V, screening shall be in accordance with MIL-PRF-38535, and shall be conducted on all devices prior to qualification and technology conformance inspection.

4.2.1 Additional criteria for device classes Q and V.

a. The burn-in test duration, test condition and test temperature, or approved alternatives shall be as specified in the device manufacturer's QM plan in accordance with MIL-PRF-38535. The burn-in test circuit shall be maintained under document revision level control of the device manufacturer's Technology Review Board (TRB) in accordance with MIL-PRF-38535 and shall be made available to the acquiring or preparing activity upon request. The test circuit shall specify the inputs, outputs, biases, and power dissipation, as applicable, in accordance with the intent specified in method 1015 of MIL-STD-883.

b. Interim and final electrical test parameters shall be as specified in table II herein.

c. Additional screening for device class V beyond the requirements of device class Q shall be as specified in MIL-PRF-38535, appendix B.

4.3 Qualification inspection for device classes Q and V. Qualification inspection for device classes Q and V shall be in accordance with MIL-PRF-38535. Inspections to be performed shall be those specified in MIL-PRF-38535 and herein for groups A, B, C, D, and E inspections (see 4.4.1 through 4.4.4).

4.4 Conformance inspection. Technology conformance inspection for classes Q and V shall be in accordance with MIL-PRF-38535 including groups A, B, C, D, and E inspections, and as specified herein.

4.4.1 Group A inspection.

a. Tests shall be as specified in table II herein.

b. For device classes Q and V, subgroups 7 and 8 shall include verifying the functionality of the device.

c. C_{IN}, C_{OUT}, and C_{PD} shall be measured only for initial qualification and after process or design changes which may affect capacitance. C_{IN} and C_{OUT} shall be measured between the designated terminal and GND at a frequency of 1 MHz. This test may be performed at 10 MHz and guaranteed, if not tested, at 1 MHz.
The DC bias for the pin under test (V_{BIAS}) = 2.5 V or 3.0 V. For C_{IN}, C_{OUT}, and C_{PD}, test all applicable pins on five devices with zero failures.

For C_{IN} and C_{OUT}, a device manufacturer may qualify devices by functional groups. A specific functional group shall be composed of function types that by design will yield the same capacitance values when tested in accordance with table I, herein. The device manufacturer shall set a function group limit for the C_{IN} and C_{OUT} tests. The device manufacturer may then test one device functional group, to the limits and conditions specified herein. All other device functions in that particular functional group shall be guaranteed, if not tested, to the limits and test conditions specified in table I, herein. The device manufacturers shall submit to DLA Land and Maritime-VA the device functions listed in each functional group and the test results for each device tested.

d. Ground and V_{CC} bounce tests are required for all device classes. These tests shall be performed only for initial qualification, after process or design changes which may affect the performance of the device, and any changes to the test fixture. V_{OLP}, V_{OLV}, V_{OHP}, and V_{OHV} shall be measured for the worst case outputs of the device. All other outputs shall be guaranteed, if not tested, to the limits established for the worst case outputs. The worst case outputs tested are to be determined by the manufacturer. Test 5 devices assembled in the worst case package type supplied to this document. All other package types shall be guaranteed, if not tested, to the limits established for the worst case package. The 5 devices to be tested shall be the worst case device type supplied to this drawing. All other device types shall be guaranteed, if not tested, to the limits established for the worst case device type. The package type and device type to be tested shall be determined by the manufacturer. The device manufacturer will submit to DLA Land and Maritime-VA data that shall include all measured peak values for each device tested and detailed oscilloscope plots for each V_{OLP}, V_{OLV}, V_{OHP}, and V_{OHV} from one sample part per function. The plot shall contain the waveforms of both a switching output and the output under test.

Each device manufacturer shall test product on the fixtures they currently use. When a new fixture is used, the device manufacturer shall inform DLA Land and Maritime-VA of this change and test the 5 devices on both the new and old test fixtures. The device manufacturer shall then submit to DLA Land and Maritime-VA data from testing on both fixtures, that shall include all measured peak values for each device tested and detailed oscilloscope plots for each V_{OLP}, V_{OLV}, V_{OHP}, and V_{OHV} from one sample part per function. The plot shall contain the waveforms of both a switching output and the output under test.

For V_{OHP}, V_{OHV}, V_{OLP}, and V_{OLV}, a device manufacturer may qualify devices by functional groups. A specific functional group shall be composed of function types that by design will yield the same test values when tested in accordance with table I, herein. The device manufacturer shall set a functional group limit for the V_{OHP}, V_{OHV}, V_{OLP}, and V_{OLV} tests. The device manufacturer may then test one device function from a functional group, to the limits and conditions specified herein. All other device functions in that particular functional group shall be guaranteed, if not tested, to the limits and conditions specified in table I, herein. The device manufacturers shall submit to DLA Land and Maritime-VA the device functions listed in each functional group and test results, along with the oscilloscope plots, for each device tested.

TABLE II. Electrical test requirements.

Test requirements	Subgroups (in accordance with MIL-PRF-38535, table III)	
	Device class Q	Device class V
Interim electrical parameters (see 4.2)	- - -	1
Final electrical parameters (see 4.2)	1/ 1, 2, 3, 7, 8, 9, 10, 11	2/ 1, 2, 3, 7, 8, 9, 10, 11
Group A test requirements (see 4.4)	1, 2, 3, 4, 7, 8, 9, 10, 11	1, 2, 3, 4, 7, 8, 9, 10, 11
Group C end-point electrical parameters (see 4.4)	1, 2, 3	1, 2, 3, 7,8, 9, 10, 11
Group D end-point electrical parameters (see 4.4)	1, 2, 3	1, 2, 3
Group E end-point electrical parameters (see 4.4)	1, 7, 9	1, 7, 9

1/ PDA applies to subgroup 1.
2/ PDA applies to subgroups 1 and 7.

4.4.2 Group C inspection. The group C inspection end-point electrical parameters shall be as specified in table II herein.

4.4.2.1 Additional criteria for device classes Q and V. The steady-state life test duration, test condition and test temperature, or approved alternatives shall be as specified in the device manufacturer's QM plan in accordance with MIL-PRF-38535. The test circuit shall be maintained under document revision level control by the device manufacturer's TRB in accordance with MIL-PRF-38535 and shall be made available to the acquiring or preparing activity upon request. The test circuit shall specify the inputs, outputs, biases, and power dissipation, as applicable, in accordance with the intent specified in method 1005 of MIL-STD-883.

4.4.3 Group D inspection. The group D inspection end-point electrical parameters shall be as specified in table II herein.

4.4.4 Group E inspection. Group E inspection is required only for parts intended to be marked as radiation hardness assured (see 3.5 herein).

a. End-point electrical parameters shall be as specified in table II herein.

b. For device classes Q and V, the devices or test vehicle shall be subjected to radiation hardness assured tests as specified in MIL-PRF-38535 for the RHA level being tested. All device classes must meet the postirradiation end-point electrical parameter limits as defined in table I at T_A = +25°C ±5°C, after exposure, to the subgroups specified in table II herein.

4.5 Methods of inspection. Methods of inspection shall be specified as follows:

4.5.1 Voltage and current. Unless otherwise specified, all voltages given are referenced to the microcircuit GND terminal. Currents given are conventional current and positive when flowing into the referenced terminal.

5. PACKAGING

5.1 Packaging requirements. The requirements for packaging shall be in accordance with MIL-PRF-38535 for device classes Q and V.

6. NOTES

6.1 Intended use. Microcircuits conforming to this drawing are intended for use for Government microcircuit applications (original equipment), design applications, and logistics purposes.

6.1.1 Replaceability. Microcircuits covered by this drawing will replace the same generic device covered by a contractor prepared specification or drawing.

6.2 Configuration control of SMD's. All proposed changes to existing SMD's will be coordinated with the users of record for the individual documents. This coordination will be accomplished using DD Form 1692, Engineering Change Proposal.

6.3 Record of users. Military and industrial users should inform DLA Land and Maritime when a system application requires configuration control and which SMD's are applicable to that system. DLA Land and Maritime will maintain a record of users and this list will be used for coordination and distribution of changes to the drawings. Users of drawings covering microelectronic devices (FSC 5962) should contact DLA Land and Maritime-VA, telephone (614) 692-8108.

6.4 Comments. Comments on this drawing should be directed to DLA Land and Maritime-VA, Columbus, Ohio 43218-3990, or telephone (614) 692-0540.

6.5 Abbreviations, symbols, and definitions. The abbreviations, symbols, and definitions used herein are defined in MIL-PRF-38535 and MIL-HDBK-1331.

6.6 Sources of supply.

6.6.1 Sources of supply for device classes Q and V. Sources of supply for device classes Q and V are listed in MIL-HDBK-103 and QML-38535. The vendors listed in QML-38535 have submitted a certificate of compliance (see 3.6 herein) to DLA Land and Maritime-VA and have agreed to this drawing.

STANDARD MICROCIRCUIT DRAWING BULLETIN

DATE: 16-09-21

Approved sources of supply for SMD 5962-96890 are listed below for immediate acquisition information only and shall be added to MIL-HDBK-103 and QML-38535 during the next revision. MIL-HDBK-103 and QML-38535 will be revised to include the addition or deletion of sources. The vendors listed below have agreed to this drawing and a certificate of compliance has been submitted to and accepted by DLA Land and Maritime-VA. This information bulletin is superseded by the next dated revision of MIL-HDBK-103 and QML-38535. DLA Land and Maritime maintains an online database of all current sources of supply a https://landandmaritimeapps.dla.mil/programs/smcr/.

Standard microcircuit drawing PIN 1/	Vendor CAGE number	Vendor similar PIN 2/
5962-9689001QXA	01295	SNJ54GTL16612WD

1/ The lead finish shown for each PIN representing a hermetic package is the most readily available from the manufacturer listed for that part. If the desired lead finish is not listed contact the vendor to determine its availability.

2/ Caution. Do not use this number for item acquisition. Items acquired to this number may not satisfy the performance requirements of this drawing.

Vendor CAGE number	Vendor name and address
01295	Texas Instruments Incorporated Semiconductor Group 8505 Forest Ln. P.O. Box 660199 Dallas, TX 75243

The information contained herein is disseminated for convenience only and the Government assumes no liability whatsoever for any inaccuracies in the information bulletin.