REVISIONS			
LTR	DESCRIPTION	DATE (YR-MO-DA)	APPROVED
A	Update to reflect latest changes in format and requirements. Editorial changes throughout. -les	01-07-10	Raymond Monnin
B	Update drawing to current requirements. Editorial changes throughout. - gap	08-12-12	Robert M. Heber
C	Update drawing to current MIL-PRF-38535 requirements. Remove class M references. - jt	15-11-16	Charles F. Saffle

REV																			
SHEET																			
REV																			
SHEET																			
REV STATUS				REV			C	C	C	C	C	C	C	C	C	C	C			
OF SHEETS				SHEET			1	2	3	4	5	6	7	8	9	10	11			

PMIC N/A

PREPARED BY
Larry T. Gauder

DLA LAND AND MARITIME
COLUMBUS, OHIO 43218-3990
http://www.landandmaritime.dla.mil

STANDARD MICROCIRCUIT DRAWING

THIS DRAWING IS AVAILABLE FOR USE BY ALL DEPARTMENTS AND AGENCIES OF THE DEPARTMENT OF DEFENSE

AMSC N/A

CHECKED BY
Thomas M. Hess

APPROVED BY
Monica L. Poelking

DRAWING APPROVAL DATE
94-12-09

REVISION LEVEL
C

MICROCIRCUIT, DIGITAL, BIPOLAR, ADVANCED SCHOTTKY TTL, QUADRUPLE D-TYPE FLIP-FLOPS WITH CLEAR, MONOLITHIC SILICON

SIZE	CAGE CODE	
A	**67268**	**5962-95537**

SHEET 1 OF 11

1. SCOPE

1.1 Scope. This drawing documents two product assurance class levels consisting of high reliability (device class Q) and space application (device class V). A choice of case outlines and lead finishes are available and are reflected in the Part or Identifying Number (PIN). When available, a choice of Radiation Hardness Assurance (RHA) levels is reflected in the PIN.

1.2 PIN. The PIN is as shown in the following example:

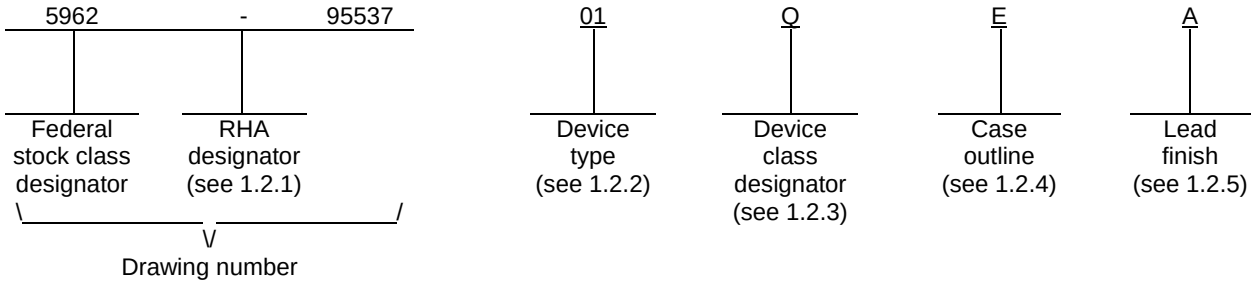

1.2.1 RHA designator. Device classes Q and V RHA marked devices meet the MIL-PRF-38535 specified RHA levels and are marked with the appropriate RHA designator. A dash (-) indicates a non-RHA device.

1.2.2 Device type. The device type identify the circuit function as follows:

Device type	Generic number	Circuit function
01	54AS175	Quadruple D-type flip-flops with clear

1.2.3 Device class designator. The device class designator is a single letter identifying the product assurance level as follows:

Device class	Device requirements documentation
Q or V	Certification and qualification to MIL-PRF-38535

1.2.4 Case outlines. The case outlines are as designated in MIL-STD-1835 and as follows:

Outline letter	Descriptive designator	Terminals	Package style
E	GDIP1-T16 or CDIP2-T16	16	Dual-in-line package
F	GDFP-F16 or CDFP3-F16	16	Flat package
2	CQCC1-N20	20	Leadless chip carrier

1.2.5 Lead finish. The lead finish is as specified in MIL-PRF-38535 for device classes Q and V.

1.3 Absolute maximum ratings. 1/

Supply voltage range	-0.5 V dc minimum to +7.0 V dc maximum
Input voltage range (V_{IN})	-1.2 V dc at -18 mA to +7.0 V dc
Storage temperature range	-65°C to +150°C
Thermal resistance, junction-to-case (θ_{JC})	See MIL-STD-1835
Junction temperature (T_J)	+175°C
Lead temperature (soldering, 10 seconds)	+300°C
Maximum power dissipation (P_D) 2/	187 mW

1.4 Recommended operating conditions.

Supply voltage range (V_{CC})	+4.5 V dc minimum to +5.5 V dc maximum
Minimum high level input voltage (V_{IH})	2.0 V dc
Maximum low level input voltage (V_{IL})	0.8 V dc
Maximum high level output current (I_{OH})	-2 mA
Maximum low level output current (I_{OL})	20 mA
Clock frequency (f_{CLOCK})	100 MHz maximum
Ambient operating temperature range (T_A)	-55°C to +125°C

2. APPLICABLE DOCUMENTS

2.1 Government specification, standards, and handbooks. The following specification, standards, and handbooks form a part of this drawing to the extent specified herein. Unless otherwise specified, the issues of these documents are those cited in the solicitation or contract.

DEPARTMENT OF DEFENSE SPECIFICATION

MIL-PRF-38535 - Integrated Circuits, Manufacturing, General Specification for.

DEPARTMENT OF DEFENSE STANDARDS

MIL-STD-883 - Test Method Standard Microcircuits.
MIL-STD-1835 - Interface Standard Electronic Component Case Outlines.

DEPARTMENT OF DEFENSE HANDBOOKS

MIL-HDBK-103 - List of Standard Microcircuit Drawings.
MIL-HDBK-780 - Standard Microcircuit Drawings.

(Copies of these documents are available online at http://quicksearch.dla.mil or from the Standardization Document Order Desk, 700 Robbins Avenue, Building 4D, Philadelphia, PA 19111-5094.)

2.2 Order of precedence. In the event of a conflict between the text of this drawing and the references cited herein, the text of this drawing takes precedence. Nothing in this document, however, supersedes applicable laws and regulations unless a specific exemption has been obtained.

1/ Stresses above the absolute maximum rating may cause permanent damage to the device. Extended operation at the maximum levels may degrade performance and affect reliability.
2/ Maximum power dissipation is defined as V_{CC} X I_{CC} and must withstand the added P_D due to output current test; e.g., I_O.

3. REQUIREMENTS

3.1 Item requirements. The individual item requirements for device classes Q and V shall be in accordance with MIL-PRF-38535 as specified herein, or as modified in the device manufacturer's Quality Management (QM) plan. The modification in the QM plan shall not affect the form, fit, or function as described herein.

3.2 Design, construction, and physical dimensions. The design, construction, and physical dimensions shall be as specified in MIL-PRF-38535 and herein for device classes Q and V.

3.2.1 Case outline. The case outline shall be in accordance with 1.2.4 herein.

3.2.2 Terminal connections. The terminal connections shall be as specified on figure 1.

3.2.3 Truth table. The truth table shall be as specified on figure 2.

3.2.4 Block diagram. The block diagram shall be as specified on figure 3.

3.2.5 Test circuit and switching waveforms. The test circuit and switching waveforms shall be as specified on figure 4.

3.3 Electrical performance characteristics and postirradiation parameter limits. Unless otherwise specified herein, the electrical performance characteristics and postirradiation parameter limits are as specified in table I and shall apply over the full ambient operating temperature range.

3.4 Electrical test requirements. The electrical test requirements shall be the subgroups specified in table II. The electrical tests for each subgroup are defined in table I.

3.5 Marking. The part shall be marked with the PIN listed in 1.2 herein. In addition, the manufacturer's PIN may also be marked. For packages where marking of the entire SMD PIN number is not feasible due to space limitations, the manufacturer has the option of not marking the "5962-" on the device. For RHA product using this option, the RHA designator shall still be marked. Marking for device classes Q and V shall be in accordance with MIL-PRF-38535.

3.5.1 Certification/compliance mark. The certification mark for device classes Q and V shall be a "QML" or "Q" as required in MIL-PRF-38535.

3.6 Certificate of compliance. For device classes Q and V, a certificate of compliance shall be required from a QML-38535 listed manufacturer in order to supply to the requirements of this drawing (see 6.6.1 herein). The certificate of compliance submitted to DLA Land and Maritime-VA prior to listing as an approved source of supply for this drawing shall affirm that the manufacturer's product meets, for device classes Q and V, the requirements of MIL-PRF-38535 and herein.

3.7 Certificate of conformance. A certificate of conformance as required for device classes Q and V in MIL-PRF-38535 shall be provided with each lot of microcircuits delivered to this drawing.

TABLE I. Electrical performance characteristics.

Test	Symbol	Conditions $-55°C \le T_A \le +125°C$ unless otherwise specified		Group A subgroups	Device Type	Limits		Unit
						Min	Max	
High level output voltage	V_{OH}	V_{CC} = 4.5 V to 5.5 V, V_{IL} = 0.8 V, V_{IH} = 2.0 V, I_{OH} = -2 mA		1, 2, 3	01	V_{cc} -2		V
Low level output voltage	V_{OL}	V_{CC} = 4.5 V, V_{IL} = 0.8 V, V_{IH} = 2.0 V, I_{OL} = 20 mA		1, 2, 3	01		0.5	V
Input clamp voltage	V_{IK}	V_{CC} = 4.5 V, I_N = -18 mA		1, 2, 3	01		-1.2	V
High level input current	I_{IH1}	V_{CC} = 5.5 V, V_{IN} = 2.7 V		1, 2, 3	01		20	µA
	I_{IH2}	V_{CC} = 5.5 V, V_{IN} = 7.0 V		1, 2, 3	01		0.1	mA
Low level input current	I_{IL}	V_{CC} = 5.5 V, V_{IN} = 0.4 V		1, 2, 3	01		-0.5	mA
Supply current	I_{CC}	V_{CC} = 5.5 V 1/		1, 2, 3	01		34	mA
Output current	I_O	V_{CC} = 5.5 V, V_{OUT} = 2.25 V		1, 2, 3	01	-30	-112	mA
Functional tests		See 4.4.1b, V_{CC} = 4.5 V, 5.5 V		7, 8	01			
Maximum clock frequency 3/	f_{MAX}			9, 10, 11	01	100		MHz
Propagation delay time, $\overline{CLR}$ to any Q or $\overline{Q}$	t_{PLH}	V_{CC} = 4.5 V to 5.5 V, C_L = 50 pF , R_L = 500 Ω		9, 10, 11	01	4	10	ns
	t_{PHL}			9, 10, 11	01	4.5	15	ns
Propagation delay time, CLK to any Q or $\overline{Q}$	t_{PLH}			9, 10, 11	01	4	8.5	ns
	t_{PHL}			9, 10, 11	01	4	11	ns
Pulse duration 3/	t_W	V_{CC} = 4.5 V to 5.5 V, C_L = 50 pF, R_L = 500 Ω	$\overline{CLR}$ low	9, 10, 11	01	5.5		ns
			CLK high	9, 10, 11	01	4		ns
			CLK low	9, 10, 11	01	5		ns
Setup time before CLK ↑	t_{SU}		Data	9, 10, 11	01	3		ns
			$\overline{CLR}$ inactive	9, 10, 11	01	6		ns
Hold time, data after CLK ↑	t_h		All	9, 10, 11	01	1		ns

1/ I_{CC} is measured with D inputs and $\overline{CLR}$ grounded, and CLK at 4.5 V.
2/ The output conditions have been chosen to produce a current that closely approximates on half of the true short-circuit output current, I_{OS}.
3/ Guaranteed, but not tested.

Device type 01		
Case outlines	E and F	2
Terminal number	Terminal symbol	
1	$\overline{CLR}$	NC
2	1Q	$\overline{CLR}$
3	$1\overline{Q}$	1Q
4	1D	$1\overline{Q}$
5	2D	1D
6	$2\overline{Q}$	NC
7	2Q	2D
8	GND	$2\overline{Q}$
9	CLK	2Q
10	3Q	GND
11	$3\overline{Q}$	NC
12	3D	CLK
13	4D	3Q
14	$4\overline{Q}$	$3\overline{Q}$
15	4Q	3D
16	V_{CC}	NC
17		4D
18		$4\overline{Q}$
19		4Q
20		V_{CC}

NC = No connection

FIGURE 1. Terminal connections.

Inputs			Outputs	
$\overline{CLR}$	CLK	D	Q	$\overline{Q}$
L	X	X	L	H
H	↑	H	H	L
H	↑	L	L	H
H	L	X	Q_0	$\overline{Q}_0$

FIGURE 2. Truth table.

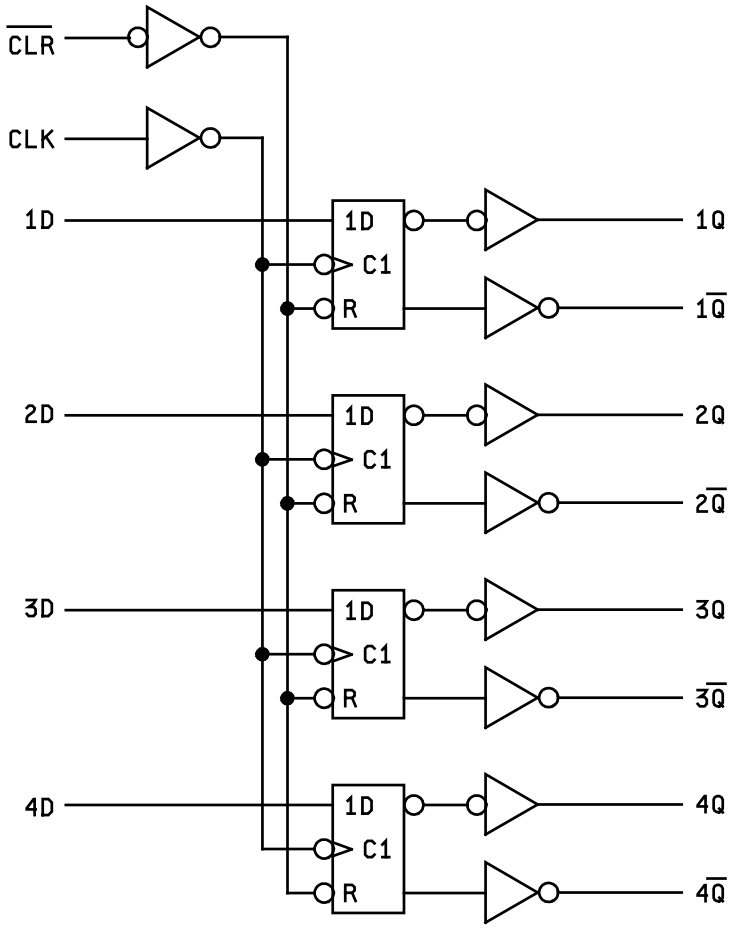

FIGURE 3. Block diagram.

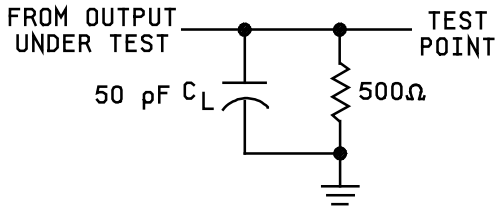

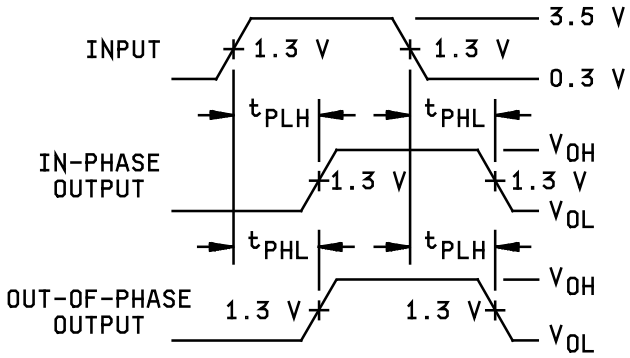

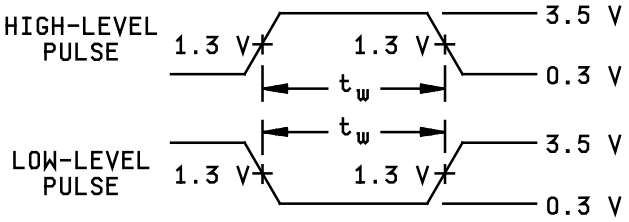

VOLTAGE WAVEFORMS
PULSE DURATION

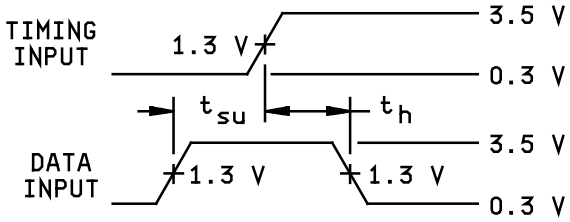

VOLTAGE WAVEFORMS
SETUP AND HOLD TIMES

NOTES:
1. C_L includes probe and jig capacitance.
2. Pulse generator characteristics: PRR = 1MHz, t_r = 2.0 ns, t_f = 2.0 ns, duty cycle = 50 percent.
3. The outputs are measured one at a time with one input transition per measurement..

FIGURE 4. Test circuit and switching waveforms.

4. VERIFICATION

4.1 Sampling and inspection. For device classes Q and V, sampling and inspection procedures shall be in accordance with MIL-PRF-38535 or as modified in the device manufacturer's Quality Management (QM) plan. The modification in the QM plan shall not affect the form, fit, or function as described herein.

4.2 Screening. For device classes Q and V, screening shall be in accordance with MIL-PRF-38535, and shall be conducted on all devices prior to qualification and technology conformance inspection.

4.2.1 Additional criteria for device classes Q and V.

a. The burn-in test duration, test condition and test temperature, or approved alternatives shall be as specified in the device manufacturer's QM plan in accordance with MIL-PRF-38535. The burn-in test circuit shall be maintained under document revision level control of the device manufacturer's Technology Review Board (TRB) in accordance with MIL-PRF-38535 and shall be made available to the acquiring or preparing activity upon request. The test circuit shall specify the inputs, outputs, biases, and power dissipation, as applicable, in accordance with the intent specified in method 1015 of MIL-STD-883.

b. Interim and final electrical test parameters shall be as specified in table II herein.

c. Additional screening for device class V beyond the requirements of device class Q shall be as specified in MIL-PRF-38535, appendix B.

4.3 Qualification inspection for device classes Q and V. Qualification inspection for device classes Q and V shall be in accordance with MIL-PRF-38535. Inspections to be performed shall be those specified in MIL-PRF-38535 and herein for groups A, B, C, D, and E inspections (see 4.4.1 through 4.4.4).

4.4 Conformance inspection. Technology conformance inspection for classes Q and V shall be in accordance with MIL-PRF-38535 including groups A, B, C, D, and E inspections, and as specified herein.

4.4.1 Group A inspection.

a. Tests shall be as specified in table II herein.

b. For device classes Q and V, subgroups 7 and 8 shall include verifying the functionality of the device.

TABLE II. Electrical test requirements.

Test requirements	Subgroups (in accordance with MIL-PRF-38535, table III)	
	Device class Q	Device class V
Interim electrical parameters (see 4.2)	- - -	- - -
Final electrical parameters (see 4.2)	1/ 1, 2, 3, 7, 8, 9, 10, 11	2/ 1, 2, 3, 7, 8, 9, 10, 11
Group A test requirements (see 4.4)	1, 2, 3, 7, 8, 9, 10, 11	1, 2, 3, 7, 8, 9, 10, 11
Group C end-point electrical parameters (see 4.4)	1, 2, 3, 7, 8	1, 2, 3, 7, 8
Group D end-point electrical parameters (see 4.4)	1, 2, 3, 7, 8	1, 2, 3, 7, 8
Group E end-point electrical parameters (see 4.4)	1, 7, 9	1, 7, 9

1/ PDA applies to subgroup 1.
2/ PDA applies to subgroups 1 and 7.

4.4.2 Group C inspection. The group C inspection end-point electrical parameters shall be as specified in table II herein.

4.4.2.1 Additional criteria for device classes Q and V. The steady-state life test duration, test condition and test temperature, or approved alternatives shall be as specified in the device manufacturer's QM plan in accordance with MIL-PRF-38535. The test circuit shall be maintained under document revision level control by the device manufacturer's TRB in accordance with MIL-PRF-38535 and shall be made available to the acquiring or preparing activity upon request. The test circuit shall specify the inputs, outputs, biases, and power dissipation, as applicable, in accordance with the intent specified in method 1005 of MIL-STD-883.

4.4.3 Group D inspection. The group D inspection end-point electrical parameters shall be as specified in table II herein.

4.4.4 Group E inspection. Group E inspection is required only for parts intended to be marked as radiation hardness assured (see 3.5 herein).

a. End-point electrical parameters shall be as specified in table II herein.

b. For device classes Q and V, the devices or test vehicle shall be subjected to radiation hardness assured tests as specified in MIL-PRF-38535 for the RHA level being tested. All device classes must meet the postirradiation end-point electrical parameter limits as defined in table I at T_A = +25°C ±5°C, after exposure, to the subgroups specified in table II herein.

5. PACKAGING

5.1 Packaging requirements. The requirements for packaging shall be in accordance with MIL-PRF-38535 for device classes Q and V.

6. NOTES

6.1 Intended use. Microcircuits conforming to this drawing are intended for use for Government microcircuit applications (original equipment), design applications, and logistics purposes.

6.1.1 Replaceability. Microcircuits covered by this drawing will replace the same generic device covered by a contractor prepared specification or drawing.

6.2 Configuration control of SMD's. All proposed changes to existing SMD's will be coordinated with the users of record for the individual documents. This coordination will be accomplished using DD Form 1692, Engineering Change Proposal.

6.3 Record of users. Military and industrial users should inform DLA Land and Maritime when a system application requires configuration control and which SMD's are applicable to that system. DLA Land and Maritime will maintain a record of users and this list will be used for coordination and distribution of changes to the drawings. Users of drawings covering microelectronic devices (FSC 5962) should contact DLA Land and Maritime-VA, telephone (614) 692-8108.

6.4 Comments. Comments on this drawing should be directed to DLA Land and Maritime-VA, Columbus, Ohio 43218-3990, or telephone (614) 692-0540.

6.5 Abbreviations, symbols, and definitions. The abbreviations, symbols, and definitions used herein are defined in MIL-PRF-38535 and MIL-HDBK-1331.

6.6 Sources of supply.

6.6.1 Sources of supply for device classes Q and V. Sources of supply for device classes Q and V are listed in MIL-HDBK-103 and QML-38535. The vendors listed in QML-38535 have submitted a certificate of compliance (see 3.6 herein) to DLA Land and Maritime-VA and have agreed to this drawing.

STANDARD MICROCIRCUIT DRAWING BULLETIN

DATE: 15-11-16

Approved sources of supply for SMD 5962-95537 are listed below for immediate acquisition information only and shall be added to MIL-HDBK-103 and QML-38535 during the next revision. MIL-HDBK-103 and QML-38535 will be revised to include the addition or deletion of sources. The vendors listed below have agreed to this drawing and a certificate of compliance has been submitted to and accepted by DLA Land and Maritime-VA. This information bulletin is superseded by the next dated revision of MIL-HDBK-103 and QML-38535. DLA Land and Maritime maintains an online database of all current sources of supply at http://www.landandmaritime.dla.mil/Programs/Smcr/.

Standard microcircuit drawing PIN 1/	Vendor CAGE number	Vendor similar PIN 2/
5962-9553701QEA	01295	SNJ54AS175AJ
5962-9553701QFA	3/	SNJ54AS175AW
5962-9553701Q2A	01295	SNJ54AS175AFK

1/ The lead finish shown for each PIN representing a hermetic package is the most readily available from the manufacturer listed for that part. If the desired lead finish is not listed contact the vendor to determine its availability.
2/ Caution. Do not use this number for item acquisition. Items acquired to this number may not satisfy the performance requirements of this drawing.
3/ Not available from an approved source of supply.

Vendor CAGE number	Vendor name and address
01295	Texas Instruments, Inc. Semiconductor Group 8505 Forest Lane P.O. Box 660199 Dallas, TX 75243

The information contained herein is disseminated for convenience only and the Government assumes no liability whatsoever for any inaccuracies in the information bulletin.