REVISIONS			
LTR	DESCRIPTION	DATE (YR-MO-DA)	APPROVED
A	Update drawing requirements to MIL-PRF-38534.	01-02-14	Raymond Monnin
B	Table I; Made correction to the third condition block for the output voltage test, I_O = "2 mA" should read "2 A". Change under the unit block for the current limits test (I_{CL}) to read "A" instead of "mA". Remove vendor cage 31757. Editorial changes troughout. -sld	04-04-21	Raymond Monnin
C	Table II, added note 1 to Group C end-point test parameters. Editorial changes throughout. -sld	15-08-18	Charles F. Saffle

THE ORIGINAL FIRST PAGE OF THIS DRAWING HAS BEEN REPLACED.

REV																			
SHEET																			
REV																			
SHEET																			

REV STATUS OF SHEETS	REV	C	C	C	C	C	C	C	C	C	C				
	SHEET	1	2	3	4	5	6	7	8	9	10				

PMIC N/A

PREPARED BY
Steve Duncan

CHECKED BY
Gary Zahn

APPROVED BY
Greg Lude

DRAWING APPROVAL DATE
91-10-29

REVISION LEVEL
C

STANDARD MICROCIRCUIT DRAWING

THIS DRAWING IS AVAILABLE FOR USE BY ALL DEPARTMENTS AND AGENCIES OF THE DEPARTMENT OF DEFENSE

AMSC N/A

DLA LAND AND MARITIME
COLUMBUS, OHIO 43218-3990
http://www.landandmaritime.dla.mil/

MICROCIRCUIT, HYBRID, LINEAR, HIGH POWER, OPERATIONAL AMPLIFIER

SIZE	CAGE CODE	
A	**67268**	**5962-91700**

SHEET 1 OF 10

1. SCOPE

1.1 Scope. This drawing documents five product assurance classes as defined in paragraph 1.2.3 and MIL-PRF-38534. A choice of case outlines and lead finishes which are available and are reflected in the Part or Identifying Number (PIN). When available, a choice of radiation hardness assurance levels are reflected in the PIN.

1.2 PIN. The PIN is as shown in the following example:

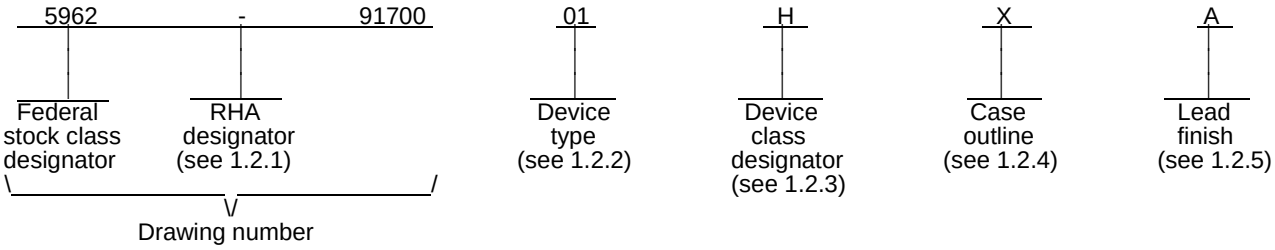

1.2.1 Radiation hardness assurance (RHA) designator. RHA marked devices meet the MIL-PRF-38534 specified RHA levels and are marked with the appropriate RHA designator. A dash (-) indicates a non-RHA device.

1.2.2 Device type(s). The device type(s) identify the circuit function as follows:

Device type	Generic number	Circuit function
01	PA09M	Power operational amplifier

1.2.3 Device class designator. This device class designator is a single letter identifying the product assurance level. All levels are defined by the requirements of MIL-PRF-38534 and require QML Certification as well as qualification (Class H, K, and E) or QML Listing (Class G and D). The product assurance levels are as follows:

Device class	Device performance documentation
K	Highest reliability class available. This level is intended for use in space applications.
H	Standard military quality class level. This level is intended for use in applications where non-space high reliability devices are required.
G	Reduced testing version of the standard military quality class. This level uses the Class H screening and In-Process Inspections with a possible limited temperature range, manufacturer specified incoming flow, and the manufacturer guarantees (but may not test) periodic and conformance inspections (Group A, B, C and D).
E	Designates devices which are based upon one of the other classes (K, H, or G) with exception(s) taken to the requirements of that class. These exception(s) must be specified in the device acquisition document; therefore the acquisition document should be reviewed to ensure that the exception(s) taken will not adversely affect system performance.
D	Manufacturer specified quality class. Quality level is defined by the manufacturers internal, QML certified flow. This product may have a limited temperature range.

1.2.4 Case outline(s). The case outline(s) are as designated in MIL-STD-1835 and as follows:

Outline letter	Descriptive designator	Terminals	Package style
X	See figure 1	8	Flange mount

1.2.5 Lead finish. The lead finish is as specified in MIL-PRF-38534.

1.3 Absolute maximum ratings. 1/

Supply voltage (V_S)	±40 V dc
Output current (I_O)	5.0 A
Power dissipation (P_D) 2/	78 W
Input voltage (differential)	±40 V dc
Input voltage (common mode)	±40 V dc
Lead temperature (soldering, 10 seconds)	+300°C
Junction temperature (T_J)	+150°C
Storage temperature range	-65°C to +150°C

1.4 Recommended operating conditions.

Supply voltage (V_S)	±35 V dc
Case operating temperature range (T_C)	-55°C to +125°C

2. APPLICABLE DOCUMENTS

2.1 Government specification, standards, and handbooks. The following specification, standards, and handbooks form a part of this drawing to the extent specified herein. Unless otherwise specified, the issues of these documents are those cited in the solicitation or contract.

DEPARTMENT OF DEFENSE SPECIFICATION

MIL-PRF-38534 - Hybrid Microcircuits, General Specification for.

DEPARTMENT OF DEFENSE STANDARDS

MIL-STD-883 - Test Method Standard Microcircuits.
MIL-STD-1835 - Interface Standard for Electronic Component Case Outlines.

DEPARTMENT OF DEFENSE HANDBOOKS

MIL-HDBK-103 - List of Standard Microcircuit Drawings.
MIL-HDBK-780 - Standard Microcircuit Drawings.

Copies of these documents are available online at http://quicksearch.dla.mil or from the Standardization Document Order Desk, 700 Robbins Avenue, Building 4D, Philadelphia, PA 19111-5094.)

2.2 Order of precedence. In the event of a conflict between the text of this drawing and the references cited herein, the text of this drawing takes precedence. Nothing in this document, however, supersedes applicable laws and regulations unless a specific exemption has been obtained.

1/ Stresses above the absolute maximum ratings may cause permanent damage to the device. Extended operation at the maximum levels may degrade performance and affect reliability.
2/ Derate at 1.8°C/W above case temperature (T_C) of +25°C.

3. REQUIREMENTS

3.1 Item requirements. The individual item performance requirements for device classes D, E, G, H, and K shall be in accordance with MIL-PRF-38534. Compliance with MIL-PRF-38534 shall include the performance of all tests herein or as designated in the device manufacturer's Quality Management (QM) plan or as designated for the applicable device class. The manufacturer may eliminate, modify or optimize the tests and inspections herein, however the performance requirements as defined in MIL-PRF-38534 shall be met for the applicable device class. In addition, the modification in the QM plan shall not affect the form, fit, or function of the device for the applicable device class.

3.2 Design, construction, and physical dimensions. The design, construction, and physical dimensions shall be as specified in MIL-PRF-38534 and herein.

3.2.1 Case outline(s). The case outline(s) shall be in accordance with 1.2.4 herein and figure 1.

3.2.2 Terminal connections. The terminal connections shall be as specified on figure 2.

3.3 Electrical performance characteristics. Unless otherwise specified herein, the electrical performance characteristics are as specified in table I and shall apply over the full specified operating temperature range.

3.4 Electrical test requirements. The electrical test requirements shall be the subgroups specified in table II. The electrical tests for each subgroup are defined in table I.

3.5 Marking of device(s). Marking of device(s) shall be in accordance with MIL-PRF-38534. The device shall be marked with the PIN listed in 1.2 herein. In addition, the manufacturer's vendor similar PIN may also be marked.

3.6 Data. In addition to the general performance requirements of MIL-PRF-38534, the manufacturer of the device described herein shall maintain the electrical test data (variables format) from the initial quality conformance inspection group A lot sample, for each device type listed herein. Also, the data should include a summary of all parameters manually tested, and for those which, if any, are guaranteed. This data shall be maintained under document revision level control by the manufacturer and be made available to the preparing activity (DLA Land and Maritime - VA) upon request.

3.7 Certificate of compliance. A certificate of compliance shall be required from a manufacturer in order to supply to this drawing. The certificate of compliance (original copy) submitted to DLA Land and Maritime - VA shall affirm that the manufacturer's product meets the performance requirements of MIL-PRF-38534 and herein.

3.8 Certificate of conformance. A certificate of conformance as required in MIL-PRF-38534 shall be provided with each lot of microcircuits delivered to this drawing.

4. VERIFICATION

4.1 Sampling and inspection. Sampling and inspection procedures shall be in accordance with MIL-PRF-38534 or as modified in the device manufacturer's Quality Management (QM) plan. The modification in the QM plan shall not affect the form, fit, or function as described herein.

4.2 Screening. Screening shall be in accordance with MIL-PRF-38534. The following additional criteria shall apply:

a. Burn-in test, method 1015 of MIL-STD-883.

(1) Test condition D. The test circuit shall be maintained by the manufacturer under document revision level control and shall be made available to either DLA Land and Maritime - VA or the acquiring activity upon request. Also, the test circuit shall specify the inputs, outputs, biases, and power dissipation, as applicable, in accordance with the intent specified in method 1015 of MIL-STD-883.

(2) T_C as specified in accordance with table I of method 1015 of MIL-STD-883.

b. Interim and final electrical test parameters shall be as specified in table II herein, except interim electrical parameter tests prior to burn-in are optional at the discretion of the manufacturer.

c. Constant acceleration may be performed after burn-in upon approval by the qualifying activity.

TABLE I. Electrical performance characteristics.

Test	Symbol	Conditions 1/ $-55°C \le T_C \le +125°C$ $V_S = \pm 35$ dc unless otherwise specified	Group A subgroups	Device type	Limits Min	Limits Max	Unit
Supply current	I_S	V_{IN} = 0 V dc, G = 100, V_{CM} = 0 V dc	1	01		85	mA
			2			140	
			3			165	
Input offset voltage	V_{OS}	V_{IN} = 0 V dc, G = 100, $V_S = \pm 12$ V dc	1	01	-5.3	+5.3	mV
			2		-8.3	+8.3	
			3		-7.7	+7.7	
		V_{IN} = 0 V dc, G = 100, $V_S = \pm 35$ V dc	1		-3.0	+3.0	mV
			2		-6.0	+6.0	
			3		-5.4	+5.4	
		V_{IN} = 0 V dc, G = 100, $V_S = \pm 40$ V dc	1		-3.5	+3.5	mV
			2		-6.5	+6.5	
			3		-5.9	+5.9	
Input bias current, $+I_N$	$+I_B$	V_{IN} = 0 V dc, $R_{BIAS} \le 100$ MΩ	1,3	01		100	pA
			2			10.0	nA
Input bias current, $-I_N$	$-I_B$	V_{IN} = 0 V dc, $R_{BIAS} \le 100$ MΩ	1,3	01		100	pA
			2			10.0	nA
Input offset current	I_{OS}	V_{IN} = 0 V dc, $R_{BIAS} \le 100$ MΩ	1,3	01		50.0	pA
			2			10.0	nA
Output voltage	V_O	$V_S = \pm 40$ V dc, I_O = 66 mA, R_L = 500 Ω	4,5,6	01	33		V
		$V_S = \pm 23.5$ V dc, I_O = 1 A, R_L = 15 Ω, T_C = +125°C	5		15		V
		$V_S = \pm 38$ V dc, I_O = 2 A, R_L = 15 Ω, T_C = +25°C, -55°C	4,6		30		V
		$V_S = \pm 21.3$ V dc, I_O = 3 A, R_L = 3.75 Ω, T_C = +25°C, -55°C	4,6		11.3		V

See footnotes at end of table.

TABLE I. Electrical performance characteristics - Continued.

Test	Symbol	Conditions 1/ $-55°C \le T_C \le +125°C$ $V_S = \pm 35$ V dc unless otherwise specified	Group A subgroups	Device type	Limits		Unit
					Min	Max	
Current limits	I_{CL}	$R_L = 3.75\ \Omega$, $V_S = \pm 32.2$ V dc, $T_C = +25°C$	4	01	3.4	6	A
Stability/noise	E_N	G = 1, $C_L = 1.5$ nF	4,5,6	01		1.0	mV
Slew rate	S_R	$R_L = 500\ \Omega$, $V_{IN} \ge 4\ V_{P-P}$	4,6	01	25	500	V/µs
			5		20	500	
Open loop gain	A_{OL}	$R_L = 500\ \Omega$, f = 15 Hz, $V_{IN} \ge 0.4\ V_{P-P}$	4,5,6	01	80		dB
Common mode rejection	CMR	$V_S = \pm 34.5$ V dc, f = dc, $V_{CM} = \pm 22.5$ V dc	4,5,6	01	64		dB

1/ During all group A testing, terminal connection BAL (pin 2) is left open.

Case outline X.

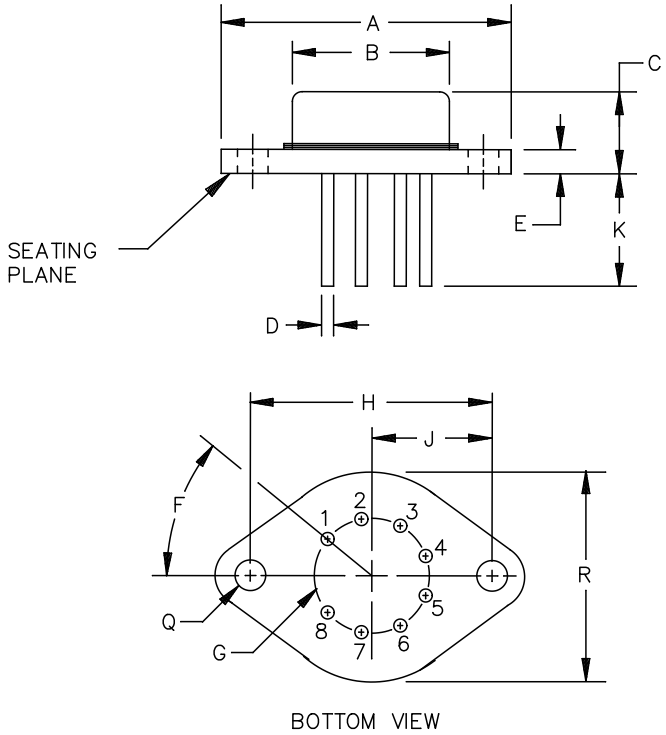

Symbol	Millimeters		Inches	
	Min	Max	Min	Max
A	38.35	39.37	1.510	1.550
B	19.30	19.81	.760	.780
C		7.37		.290
D	0.97	1.07	.038	.042
E	2.03	2.54	.080	.100
F	40° BSC		40° BSC	
G	12.7 BSC		.500 BSC	
H	30.12 BSC		1.186 BSC	
J	15.06 BSC		0.593 BSC	
K	11.68	12.70	.460	.500
Q	3.84	4.09	.151	.161
R	25.15	25.65	.990	1.010

NOTES:

1. The U. S. preferred system of measurement is the metric SI. This case outline was originally designed using inch-pound units of measurement, in the event of conflict between the metric and inch-pound units, the inch-pound shall take precedence.
2. Pin numbers are for reference and may not be marked on package.

FIGURE 1. Case outline(s).

Device type	01
Case outline	X
Terminal number	Terminal symbol
1	Output
2	Balance (BAL)
3	$+V_S$
4	+IN
5	-IN
6	$-V_S$
7	R_L
8	C_L

FIGURE 2. Terminal connections.

TABLE II. Electrical test requirements.

MIL-PRF-38534 test requirements	Subgroups (in accordance with MIL-PRF-38534, group A test table)
Interim electrical parameters	
Final electrical parameters	1*, 2, 3, 4, 5, 6
Group A test requirements	1, 2, 3, 4, 5, 6
Group C end-point electrical 1/ parameters	1, 2, 3, 4
End-point electrical parameters for radiation hardness assurance (RHA) devices	Not applicable

* PDA applies to subgroup 1.
1/ As a minimum, for all Group C testing performed after 15-08-18 manufacturers shall perform subgroups 1, 2, and 3 from the Group A electrical test table (Table C-Xa of MIL-PRF-38534).

4.3 Conformance and periodic inspections. Conformance inspection (CI) and periodic inspection (PI) shall be in accordance with MIL-PRF-38534 and as specified herein.

4.3.1 Group A inspection (CI). Group A inspection shall be in accordance with MIL-PRF-38534 and as follows:

a. Tests shall be as specified in table II herein.

b. Subgroups 7, 8, 9, 10, and 11 shall be omitted.

4.3.2 Group B inspection (PI). Group B inspection shall be in accordance with MIL-PRF-38534.

4.3.3 Group C inspection (PI). Group C inspection shall be in accordance with MIL-PRF-38534 and as follows:

a. End-point electrical parameters shall be as specified in table II herein.

b. Steady-state life test, method 1005 of MIL-STD-883.

(1) Test condition D. The test circuit shall be maintained by the manufacturer under document revision level control and shall be made available to either DLA Land and Maritime - VA or the acquiring activity upon request. Also, the test circuit shall specify the inputs, outputs, biases, and power dissipation, as applicable, in accordance with the intent specified in method 1005 of MIL-STD-883.

(2) T_C as specified in accordance with table I of method 1005 of MIL-STD-883.

(3) Test duration: 1,000 hours, except as permitted by method 1005 of MIL-STD-883.

4.3.4 Group D inspection (PI). Group D inspection shall be in accordance with MIL-PRF-38534.

4.3.5 Radiation Hardness Assurance (RHA) inspection. RHA inspection is not currently applicable to this drawing.

5. PACKAGING

5.1 Packaging requirements. The requirements for packaging shall be in accordance with MIL-PRF-38534.

6. NOTES

6.1 Intended use. Microcircuits conforming to this drawing are intended for use for Government microcircuit applications (original equipment), design applications, and logistics purposes.

6.2 Replaceability. Microcircuits covered by this drawing will replace the same generic device covered by a contractor-prepared specification or drawing.

6.3 Configuration control of SMD's. All proposed changes to existing SMD's will be coordinated as specified in MIL-PRF-38534.

6.4 Record of users. Military and industrial users should inform DLA Land and Maritime when a system application requires configuration control and the applicable SMD to that system. DLA Land and Maritime will maintain a record of users and this list will be used for coordination and distribution of changes to the drawings. Users of drawings covering microelectronic devices (FSC 5962) should contact DLA Land and Maritime-VA, telephone (614) 692-8108.

6.5 Comments. Comments on this drawing should be directed to DLA Land and Maritime-VA, Columbus, Ohio 43218-3990, or telephone (614) 692-1081.

6.6 Sources of supply. Sources of supply are listed in MIL-HDBK-103 and QML-38534. The vendors, listed in MIL-HDBK-103 and QML-38534, have submitted a certificate of compliance (see 3.7 herein) to DLA Land and Maritime-VA and have agreed to this drawing.

STANDARD MICROCIRCUIT DRAWING BULLETIN

DATE: 15-08-18

Approved sources of supply for SMD 5962-91700 are listed below for immediate acquisition information only and shall be added to MIL-HDBK-103 and QML-38534 during the next revisions. MIL-HDBK-103 and QML-38534 will be revised to include the addition or deletion of sources. The vendors listed below have agreed to this drawing and a certificate of compliance has been submitted to and accepted by DLA Land and Maritime -VA. This information bulletin is superseded by the next dated revisions of MIL-HDBK-103 and QML-38534. DLA Land and Maritime maintains an online database of all current sources of supply at http://www.landandmaritime.dla.mil/Programs/Smcr/.

Standard microcircuit drawing PIN 1/	Vendor CAGE number	Vendor similar PIN 2/
5962-9170001HXA 5962-9170001HXC	3/ 3/	MIOP42119/883 MIOP42119/883
5962-9170001HXA 5962-9170001HXC	60024 3/	PA09M/883 PA09M/883

1/ The lead finish shown for each PIN representing a hermetic package is the most readily available from the manufacturer listed for that part. If the desired lead finish is not listed contact the Vendor to determine its availability.
2/ Caution. Do not use this number for item acquisition. Items acquired to this number may not satisfy the performance requirements of this drawing.
3/ Not available from an source of supply.

Vendor CAGE number	Vendor name and address
60024	Apex Microtechnology Corporation 5980 North Shannon Road Tucson, AZ 85741-5247

The information contained herein is disseminated for convenience only and the Government assumes no liability whatsoever for any inaccuracies in the information bulletin.