REVISIONS			
LTR	DESCRIPTION	DATE (YR-MO-DA)	APPROVED
A	Add logic diagram. Add notes to figure 4, switching waveforms and test circuit. Update the boilerplate to current requirements as specified in MIL-PRF-38535. Editorial changes throughout – jak.	05-10-03	Thomas M. Hess
B	Correct output current conditions for V_{OH} and V_{OL} tests in table I. Modify footnote 2 in table I to be more correct. Update the boilerplate to current requirements as specified in MIL-PRF-38535. Editorial changes throughout – jak.	12-02-23	Thomas M. Hess

REV																			
SHEET																			
REV																			
SHEET																			
REV STATUS				REV	B	B	B	B	B	B	B	B	B	B	B			
OF SHEETS				SHEET	1	2	3	4	5	6	7	8	9	10	11			

PMIC N/A

PREPARED BY
Ronald L. Couch

DLA LAND AND MARITIME
COLUMBUS, OHIO 43218-3990
http://www.landandmaritime.dla.mil

STANDARD MICROCIRCUIT DRAWING

THIS DRAWING IS AVAILABLE FOR USE BY ALL DEPARTMENTS AND AGENCIES OF THE DEPARTMENT OF DEFENSE

CHECKED BY
Monica L. Poelking

APPROVED BY
Michael A. Frye

DRAWING APPROVAL DATE
89-08-18

MICROCIRCUIT, DIGITAL, HIGH-SPEED CMOS, TRIPLE 3-INPUT NAND GATE, TTL COMPATIBLE INPUTS, MONOLITHIC SILICON

AMSC N/A

REVISION LEVEL
B

SIZE	CAGE CODE	
A	**67268**	**5962-89843**

SHEET 1 OF 11

1. SCOPE

1.1 Scope. This drawing describes device requirements for MIL-STD-883 compliant, non-JAN class level B microcircuits in accordance with MIL-PRF-38535, appendix A.

1.2 Part or Identifying Number (PIN). The complete PIN is as shown in the following example:

5962-89843	01	C	A
Drawing number	Device type (see 1.2.1)	Case outline (see 1.2.2)	Lead finish (see 1.2.3)

1.2.1 Device type(s). The device type(s) identify the circuit function as follows:

Device type	Generic number	Circuit function
01	54HCT10	Triple 3-input NAND gate, TTL compatible inputs

1.2.2 Case outline(s). The case outline(s) are as designated in MIL-STD-1835 and as follows:

Outline letter	Descriptive designator	Terminals	Package style
C	GDIP1-T14 or CDIP2-T14	14	Dual-in-line

1.2.3 Lead finish. The lead finish is as specified in MIL-PRF-38535, appendix A.

1.3 Absolute maximum ratings. 1/ 2/

Supply voltage range (V_{CC}) ..... -0.5 V dc to +7.0 V dc
DC input voltage range (V_{IN}) ..... -0.5 V dc to V_{CC} + 0.5 V dc
DC output voltage range (V_{OUT}) ..... -0.5 V dc to V_{CC} + 0.5 V dc
DC input diode current (I_{IK}) ..... ±20 mA
DC output diode current (per pin) (I_{OK}) ..... ±20 mA
DC drain current (per pin) (I_{DRAIN}) ..... ±25 mA
DC V_{CC} or GND current (per pin) (I_{CC}, I_{GND}) ..... ±50 mA
Storage temperature range (T_{STG}) ..... -65°C to +150°C
Maximum power dissipation (P_D) ..... 500 mW 3/
Lead temperature (soldering, 10 seconds) ..... +300°C
Thermal resistance, junction-to-case (θ_{JC}) ..... See MIL-STD-1835
Junction temperature (T_J) ..... +175°C

1.4 Recommended operating conditions. 2/

Supply voltage range (V_{CC}) ..... +4.5 V dc to +5.5 V dc
Input voltage range (V_{IN}) ..... +0.0 V dc to V_{CC}
Output voltage range (V_{OUT}) ..... +0.0 V dc to V_{CC}
Case operating temperature range (T_C) ..... -55°C to +125°C
Input rise or fall time (t_r, t_f):
V_{CC} = 4.5 V ..... 0 to 500 ns

1/ Stresses above the absolute maximum rating may cause permanent damage to the device. Extended operation at the maximum levels may degrade performance and affect reliability.

2/ Unless other wise specified, all voltages are referenced to ground.

3/ For T_C = +100°C to +125°C, derate linearly at 8 mW/°C.

2. APPLICABLE DOCUMENTS

2.1 Government specification, standards, and handbooks. The following specification, standards, and handbooks form a part of this drawing to the extent specified herein. Unless otherwise specified, the issues of these documents are those cited in the solicitation or contract.

DEPARTMENT OF DEFENSE SPECIFICATION

MIL-PRF-38535 - Integrated Circuits, Manufacturing, General Specification for.

DEPARTMENT OF DEFENSE STANDARDS

MIL-STD-883 - Test Method Standard Microcircuits.
MIL-STD-1835 - Interface Standard Electronic Component Case Outlines.

DEPARTMENT OF DEFENSE HANDBOOKS

MIL-HDBK-103 - List of Standard Microcircuit Drawings.
MIL-HDBK-780 - Standard Microcircuit Drawings.

(Copies of these documents are available online at https://assist.daps.dla.mil/quicksearch/ or from the Standardization Document Order Desk, 700 Robbins Avenue, Building 4D, Philadelphia, PA 19111-5094.)

2.2 Non-Government publications. The following document(s) form a part of this document to the extent specified herein. Unless otherwise specified, the issues of these documents are those cited in the solicitation or contract.

JEDEC – SOLID STATE TECHNOLOGY ASSOCIATION (JEDEC)

JESD-7-A - Standard for Description of 54/74HCXXXX and 54/74HCTXXXX High-Speed CMOS Devices.

(Copies of these documents are available online at http://www.jedec.org or from JEDEC – Solid State Technology Association, 3103 North 10th Street, Suite 240–S, Arlington, VA 22201.)

2.3 Order of precedence. In the event of a conflict between the text of this drawing and the references cited herein, the text of this drawing takes precedence. Nothing in this document, however, supersedes applicable laws and regulations unless a specific exemption has been obtained.

3. REQUIREMENTS

3.1 Item requirements. The individual item requirements shall be in accordance with MIL-PRF-38535, appendix A for non-JAN class level B devices and as specified herein. Product built to this drawing that is produced by a Qualified Manufacturer Listing (QML) certified and qualified manufacturer or a manufacturer who has been granted transitional certification to MIL-PRF-38535 may be processed as QML product in accordance with the manufacturers approved program plan and qualifying activity approval in accordance with MIL-PRF-38535. This QML flow as documented in the Quality Management (QM) plan may make modifications to the requirements herein. These modifications shall not affect form, fit, or function of the device. These modifications shall not affect the PIN as described herein. A "Q" or "QML" certification mark in accordance with MIL-PRF-38535 is required to identify when the QML flow option is used.

3.2 Design, construction, and physical dimensions. The design, construction, and physical dimensions shall be as specified in MIL-PRF-38535, appendix A and herein.

3.2.1 Case outline. The case outline shall be in accordance with 1.2.2 herein.

3.2.2 Terminal connections. The terminal connections shall be as specified on figure 1.

3.2.3 Truth table. The truth table shall be as specified on figure 2.

3.2.4 Logic diagram. The logic diagram shall be as specified on figure 3.

3.2.5 Switching waveforms and test circuit. The switching waveforms and test circuit shall be as specified on figure 4.

3.3 Electrical performance characteristics. Unless otherwise specified herein, the electrical performance characteristics are as specified in table I and shall apply over the full case operating temperature range.

3.4 Electrical test requirements. The electrical test requirements shall be the subgroups specified in table II. The electrical tests for each subgroup are described in table I.

3.5 Marking. Marking shall be in accordance with MIL-PRF-38535, appendix A. The part shall be marked with the PIN listed in 1.2 herein. In addition, the manufacturer's PIN may also be marked. For packages where marking of the entire SMD PIN number is not feasible due to space limitations, the manufacturer has the option of not marking the "5962-" on the device.

3.5.1 Certification/compliance mark. A compliance indicator “C” shall be marked on all non-JAN devices built in compliance to MIL-PRF-38535, appendix A. The compliance indicator “C” shall be replaced with a "Q" or "QML" certification mark in accordance with MIL-PRF-38535 to identify when the QML flow option is used.

3.6 Certificate of compliance. A certificate of compliance shall be required from a manufacturer in order to be listed as an approved source of supply in MIL-HDBK-103 (see 6.6 herein). The certificate of compliance submitted to DLA Land and Maritime-VA prior to listing as an approved source of supply shall affirm that the manufacturer's product meets the requirements of
MIL-PRF-38535, appendix A and the requirements herein.

3.7 Certificate of conformance. A certificate of conformance as required in MIL-PRF-38535, appendix A shall be provided with each lot of microcircuits delivered to this drawing.

3.8 Notification of change. Notification of change to DLA Land and Maritime -VA shall be required for any change that affects this drawing.

3.9 Verification and review. DLA Land and Maritime, DLA Land and Maritime 's agent, and the acquiring activity retain the option to review the manufacturer's facility and applicable required documentation. Offshore documentation shall be made available onshore at the option of the reviewer.

TABLE I. Electrical performance characteristics.

Test	Symbol	Conditions 1/ -55°C ≤ T_C ≤ +125°C unless otherwise specified		V_{CC}	Group A subgroups	Limits		Unit
						Min	Max	
High level output voltage	V_{OH}	V_{IN} = 2.0 V or 0.8 V	I_{OH} = -20 μA	4.5 V	1, 2, 3	4.4		V
			I_{OH} = -4 mA			3.7		
Low level output voltage	V_{OL}	V_{IN} = 2.0 V or 0.8 V	I_{OL} = +20 μA	4.5 V	1, 2, 3		0.1	V
			I_{OL} = +4 mA				0.4	
High level input voltage	V_{IH} 2/			4.5 V	1, 2, 3	2.0		V
Low level input voltage	V_{IL} 2/			4.5 V	1, 2, 3		0.8	V
Input capacitance	C_{IN}	V_{IN} = 0 V, see 4.3.1c, T_C = +25°C			4		10	pF
Quiescent supply current	I_{CC}	V_{IN} = V_{CC} or GND, I_{OUT} = 0.0 A		5.5 V	1, 2, 3		40	μA
Input leakage current	I_{IN}	V_{IN} = V_{CC} or GND		5.5 V	1, 2, 3		±1.0	μA
Additional quiescent supply current, TTL input levels	ΔI_{CC}	Any one input, V_{IN} = 2.4 V Other inputs, V_{IN} = V_{CC} or GND I_{OUT} = 0.0 A		5.5 V	1, 2, 3		294	μA
Functional tests		See 4.3.1d			7, 8			
Propagation delay time, An, Bn, or Cn to Yn	t_{PHL}, t_{PLH}	C_L = 50 pF See figure 4		4.5 V	9		24	ns
					10, 11		36	
Output transition time	t_{TLH}, t_{THL} 3/			4.5 V	9		15	ns
					10, 11		22	

1/ For power supply of 5 V ±10 percent, the worst case output voltages (V_{OH} and V_{OL}) occur for HCT at 4.5 V. Thus, the 4.5 V values should be used when designing with this supply. Worst cases V_{IH} and V_{IL} occur at V_{CC} = 5.5 V and 4.5 V, respectively.

2/ V_{IH} and V_{IL} tests are guaranteed if not tested but shall be applied as forcing functions for V_{OH} or V_{OL} tests.

3/ Transition times (t_{TLH}, t_{THL}), if not tested, shall be guaranteed to the specified limits in table I.

Device type	01
Case outline	C
Terminal number	Terminal symbol
1	A1
2	B1
3	A2
4	B2
5	C2
6	Y2
7	GND
8	Y3
9	A3
10	B3
11	C3
12	Y1
13	C1
14	V_{CC}

FIGURE 1. Terminal connections.

Inputs			Outputs
An	Bn	Cn	Yn
L	L	L	H
L	L	H	H
L	H	L	H
L	H	H	H
H	L	L	H
H	L	H	H
H	H	L	H
H	H	H	L

L = Low voltage level
H = High voltage level

FIGURE 2. Truth table.

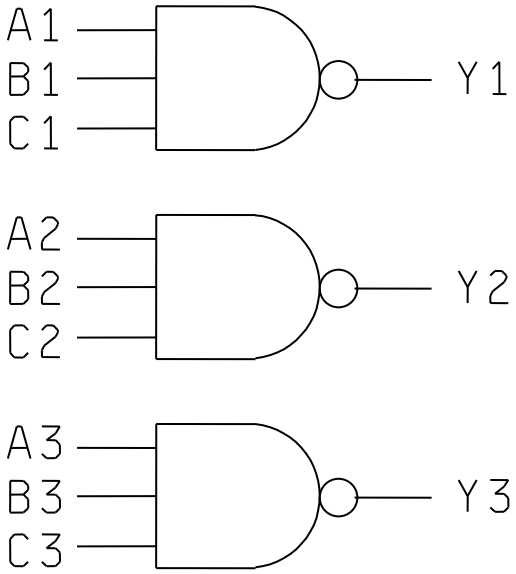

FIGURE 3. Logic diagram.

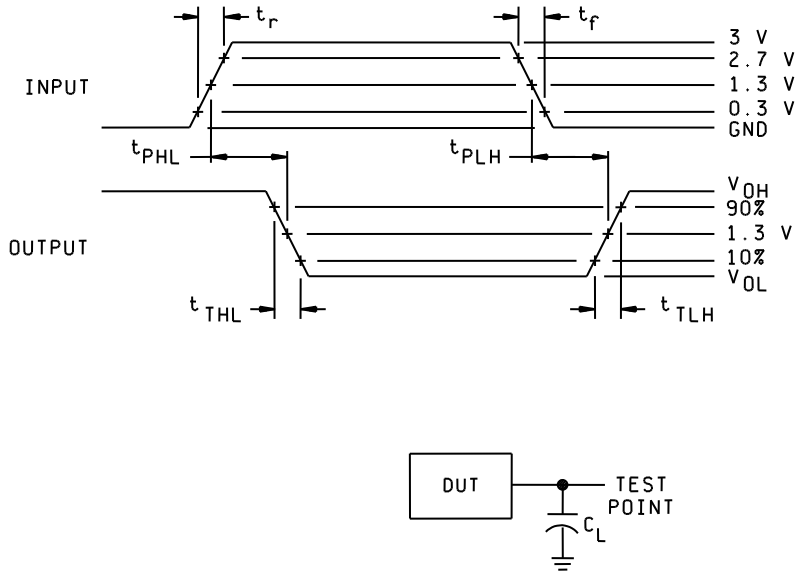

NOTES:

1. C_L = 50 pF or equivalent, includes test jig and probe capacitance.
2. Input signal from pulse generator: V_{IN} = 0.0 V to 3.0 V; PRR ≤ 1 MHz; Z_O = 50Ω; t_r = 6.0 ns; t_f = 6.0 ns; t_r and t_f shall be measured from 0.3 V to 2.7 V and from 2.7 V to 0.3 V, respectively; duty cycle = 50 percent.
3. The outputs are measured one at a time with one transition per measurement.

FIGURE 4. Switching waveforms and test circuit.

4. VERIFICATION

4.1 Sampling and inspection. Sampling and inspection procedures shall be in accordance with MIL-PRF-38535, appendix A.

4.2 Screening. Screening shall be in accordance with method 5004 of MIL-STD-883, and shall be conducted on all devices prior to quality conformance inspection. The following additional criteria shall apply:

a. Burn-in test, method 1015 of MIL-STD-883.

(1) Test condition A, B, C, or D. The test circuit shall be maintained by the manufacturer under document revision level control and shall be made available to the preparing or acquiring activity upon request. The test circuit shall specify the inputs, outputs, biases, and power dissipation, as applicable, in accordance with the intent specified in method 1015 of MIL-STD-883.

(2) T_A = +125°C, minimum.

b. Interim and final electrical test parameters shall be as specified in table II herein, except interim electrical parameter tests prior to burn-in are optional at the discretion of the manufacturer.

TABLE II. Electrical test requirements.

MIL-STD-883 test requirements	Subgroups (in accordance with MIL-STD-883, method 5005, table I)
Interim electrical parameters (method 5004)	- - -
Final electrical test parameters (method 5004)	1*, 2, 3, 7, 8, 9
Group A test requirements (method 5005)	1, 2, 3, 4, 7, 8, 9, 10**, 11**
Groups C and D end-point electrical parameters (method 5005)	1, 2, 3

* PDA applies to subgroup 1.
** Subgroups 10 and 11, if not tested, shall be guaranteed to the specified limits in table I.

4.3 Quality conformance inspection. Quality conformance inspection shall be in accordance with method 5005 of MIL-STD-883 including groups A, B, C, and D inspections. The following additional criteria shall apply.

4.3.1 Group A inspection.

a. Tests shall be as specified in table II herein.

b. Subgroups 5 and 6 in table I, method 5005 of MIL-STD-883 shall be omitted.

c. Subgroup 4 (C_{IN} measurement) shall be measured only for the initial test and after process or design changes which may affect capacitance. Test all applicable pins on 5 devices with zero failures.

d. Subgroup 7 and 8 tests shall verify the truth table as specified on figure 2.

4.3.2 Groups C and D inspections.

a. End-point electrical parameters shall be as specified in table II herein.

b. Steady-state life test conditions, method 1005 of MIL-STD-883.

(1) Test condition A, B, C, or D. The test circuit shall be maintained by the manufacturer under document revision level control and shall be made available to the preparing or acquiring activity upon request. The test circuit shall specify the inputs, outputs, biases, and power dissipation, as applicable, in accordance with the intent specified in method 1005 of MIL-STD-883.

(2) T_A = +125°C, minimum.

(3) Test duration: 1,000 hours, except as permitted by method 1005 of MIL-STD-883.

5. PACKAGING

5.1 Packaging requirements. The requirements for packaging shall be in accordance with MIL-PRF-38535, appendix A.

6. NOTES

6.1 Intended use. Microcircuits conforming to this drawing are intended for use for Government microcircuit applications (original equipment), design applications, and logistics purposes.

6.2 Replaceability. Microcircuits covered by this drawing will replace the same generic device covered by a contractor-prepared specification or drawing.

6.3 Configuration control of SMD's. All proposed changes to existing SMD's will be coordinated with the users of record for the individual documents. This coordination will be accomplished using DD Form 1692, Engineering Change Proposal.

6.4 Record of users. Military and industrial users should inform DLA Land and Maritime when a system application requires configuration control and the applicable SMD. DLA Land and Maritime will maintain a record of users and this list will be used for coordination and distribution of changes to the drawings. Users of drawings covering microelectronics devices (FSC 5962) should contact DLA Land and Maritime -VA, telephone (614) 692-0547.

6.5 Comments. Comments on this drawing should be directed to DLA Land and Maritime -VA, Columbus, Ohio 43218-3990, or telephone (614) 692-0547.

6.6 Approved sources of supply. Approved sources of supply are listed in MIL-HDBK-103. The vendors listed in MIL-HDBK-103 have agreed to this drawing and a certificate of compliance (see 3.6 herein) has been submitted to and accepted by DLA Land and Maritime -VA.

STANDARD MICROCIRCUIT DRAWING BULLETIN

DATE: 12-02-23

Approved sources of supply for SMD 5962-89843 are listed below for immediate acquisition information only and shall be added to MIL-HDBK-103 and QML-38535 during the next revision. MIL-HDBK-103 and QML-38535 will be revised to include the addition or deletion of sources. The vendors listed below have agreed to this drawing and a certificate of compliance has been submitted to and accepted by DLA Land and Maritime -VA. This information bulletin is superseded by the next dated revision of MIL-HDBK-103 and QML-38535. DLA Land and Maritime maintains an online database of all current sources of supply at http://www.landandmaritime.dla.mil/Programs/Smcr/.

Standard microcircuit drawing PIN 1/	Vendor CAGE number	Vendor similar PIN 2/
5962-8984301CA	01295	CD54HCT10F3A

1/ The lead finish shown for each PIN representing a hermetic package is the most readily available from the manufacturer listed for that part. If the desired lead finish is not listed, contact the vendor to determine its availability.

2/ Caution. Do not use this number for item acquisition. Items acquired to this number may not satisfy the performance requirements of this drawing.

Vendor CAGE number	Vendor name and address
01295	Texas Instruments Inc. Semiconductor Group 8505 Forest Ln. P.O. Box 660199 Dallas, TX 75243 Point of contact: U.S. Highway 75 South P.O. Box 84, M/S 853 Sherman, TX 75090-9493

The information contained herein is disseminated for convenience only and the Government assumes no liability whatsoever for any inaccuracies in the information bulletin.