REVISIONS			
LTR	DESCRIPTION	DATE (YR-MO-DA)	APPROVED
A	Add "Changes in accordance with NOR 5962-R295-92".	92-09-02	M. L. Poelking
B	Update to reflect latest changes in format and requirements. Editorial changes throughout. -les	01-02-05	Raymond Monnin
C	Update drawing to current requirements. Editorial changes throughout. - gap	08-07-23	Robert M. Heber
D	Update drawing to current MIL-PRF-38535 requirement. - jt	16-01-11	Charles F. Saffle

The original first sheet of this drawing has been replaced.

REV																				
SHEET																				
REV																				
SHEET																				
REV STATUS				REV			D	D	D	D	D	D	D	D	D	D	D	D		
OF SHEETS				SHEET			1	2	3	4	5	6	7	8	9	10	11	12		

PMIC N/A	PREPARED BY Christopher A. Rauch	**DLA LAND AND MARITIME** **COLUMBUS, OHIO 43218-3990** **http://www.landandmaritime.dla.mil**
STANDARD MICROCIRCUIT DRAWING THIS DRAWING IS AVAILABLE FOR USE BY ALL DEPARTMENTS AND AGENCIES OF THE DEPARTMENT OF DEFENSE	CHECKED BY Raymond Monnin	
	APPROVED BY Michael A. Frye	MICROCIRCUIT, DIGITAL, BIPOLAR, ADVANCED LOW POWER SCHOTTKY TTL, INVERTING, OCTAL BUFFER AND LINE DRIVER WITH THREE-STATE OUTPUTS, MONOLITHIC SILICON
	DRAWING APPROVAL DATE 88-04-27	
AMSC N/A	REVISION LEVEL D	SIZE A / CAGE CODE **67268** / **5962-88591**
		SHEET 1 OF 12

1. SCOPE

1.1 Scope. This drawing describes device requirements for MIL-STD-883 compliant, non-JAN class level B microcircuits in accordance with MIL-PRF-38535, appendix A.

1.2 Part or Identifying Number (PIN). The complete PIN is as shown in the following example:

5962-88591	01	S	A
Drawing number	Device type (see 1.2.1)	Case outline (see 1.2.2)	Lead finish (see 1.2.3)

1.2.1 Device type. The device type identify the circuit function as follows:

Device type	Generic number	Circuit function
01	54ALS240	Inverting octal buffer and line driver with three-state output

1.2.2 Case outline. The case outline are as designated in MIL-STD-1835 and as follows:

Outline letter	Descriptive designator	Terminals	Package style
S	GDFP2-F20 or CDFP3-F20	20	Flat package

1.2.3 Lead finish. The lead finish is as specified in MIL-PRF-38535, appendix A.

1.3 Absolute maximum ratings. 1/

Supply voltage ..... -0.5 V dc to +7.0 V dc
Input voltage (V_{IN}) ..... -1.2 V dc at -18mA to +7.0 V dc
Voltage applied to a disable 3-state output ..... 5.5 V dc
Storage temperature range ..... -65°C to +150°C
Maximum power dissipation (P_D) ..... 137.5 mW 2/
Lead temperature (soldering, 10 seconds) ..... +300°C
Thermal resistance, junction-to-case (θ_{JC}) ..... See MIL-STD-1835
Junction temperature (T_J) ..... +175°C

1.4 Recommended operating conditions.

Supply voltage range (V_{CC}) ..... +4.5 V dc to +5.5 V dc
Minimum high-level input voltage (V_{IH}) ..... +2.0 V dc
Maximum low level input voltage (V_{IL}):
T_C = +125°C ..... 0.7 V dc
T_C = -55°C ..... 0.8 V dc
T_C = +25°C ..... 0.8 V dc
Case operating temperature range (T_C) ..... -55°C to +125°C

1/ Stresses above the absolute maximum rating may cause permanent damage to the device. Extended operation at the maximum levels may degrade performance and affect reliability.
2/ Maximum power dissipation is defined as V_{CC} x I_{CC}, and must withstand the added P_D due to short circuit test; e.g., I_{OS}.

2. APPLICABLE DOCUMENTS

2.1 Government specification, standards, and handbooks. The following specification, standards, and handbooks form a part of this drawing to the extent specified herein. Unless otherwise specified, the issues of these documents are those cited in the solicitation or contract.

DEPARTMENT OF DEFENSE SPECIFICATION

MIL-PRF-38535 - Integrated Circuits, Manufacturing, General Specification for.

DEPARTMENT OF DEFENSE STANDARDS

MIL-STD-883 - Test Method Standard Microcircuits.
MIL-STD-1835 - Interface Standard Electronic Component Case Outlines.

DEPARTMENT OF DEFENSE HANDBOOKS

MIL-HDBK-103 - List of Standard Microcircuit Drawings.
MIL-HDBK-780 - Standard Microcircuit Drawings.

(Copies of these documents are available online at http://quicksearch.dla.mil/ or from the Standardization Document Order Desk, 700 Robbins Avenue, Building 4D, Philadelphia, PA 19111-5094.)

2.2 Order of precedence. In the event of a conflict between the text of this drawing and the references cited herein, the text of this drawing takes precedence. Nothing in this document, however, supersedes applicable laws and regulations unless a specific exemption has been obtained.

3. REQUIREMENTS

3.1 Item requirements. The individual item requirements shall be in accordance with MIL-PRF-38535, appendix A for non-JAN class level B devices and as specified herein. Product built to this drawing that is produced by a Qualified Manufacturer Listing (QML) certified and qualified manufacturer or a manufacturer who has been granted transitional certification to MIL-PRF-38535 may be processed as QML product in accordance with the manufacturers approved program plan and qualifying activity approval in accordance with MIL-PRF-38535. This QML flow as documented in the Quality Management (QM) plan may make modifications to the requirements herein. These modifications shall not affect form, fit, or function of the device. These modifications shall not affect the PIN as described herein. A "Q" or "QML" certification mark in accordance with MIL-PRF-38535 is required to identify when the QML flow option is used.

3.2 Design, construction, and physical dimensions. The design, construction, and physical dimensions shall be as specified in MIL-PRF-38535, appendix A and herein.

3.2.1 Case outlines. The case outlines shall be in accordance with 1.2.2 herein.

3.2.2 Terminal connections. The terminal connections shall be as specified on figure1.

3.2.3 Truth table. The truth tables shall be as specified on figure 2.

3.2.4 Logic diagram. The logic diagram shall be as specified on figure 3.

3.2.5 Switching waveforms and test circuit. The switching waveforms and test circuit shall be as specified on figure 4.

3.3 Electrical performance characteristics. Unless otherwise specified herein, the electrical performance characteristics are as specified in table I and shall apply over the full case operating temperature range.

3.4 Electrical test requirements. The electrical test requirements shall be the subgroups specified in table II. The electrical tests for each subgroup are described in table I.

3.5 Marking. Marking shall be in accordance with MIL-PRF-38535, appendix A. The part shall be marked with the PIN listed in 1.2 herein. In addition, the manufacturer's PIN may also be marked. For packages where marking of the entire SMD PIN number is not feasible due to space limitations, the manufacturer has the option of not marking the "5962-" on the device.

3.5.1 Certification/compliance mark. A compliance indicator “C” shall be marked on all non-JAN devices built in compliance to MIL-PRF-38535, appendix A. The compliance indicator “C” shall be replaced with a "Q" or "QML" certification mark in accordance with MIL-PRF-38535 to identify when the QML flow option is used.

3.6 Certificate of compliance. A certificate of compliance shall be required from a manufacturer in order to be listed as an approved source of supply in MIL-HDBK-103 (see 6.6 herein). The certificate of compliance submitted to DLA Land and Maritime -VA prior to listing as an approved source of supply shall affirm that the manufacturer's product meets the requirements of MIL-PRF-38535, appendix A and the requirements herein.

3.7 Certificate of conformance. A certificate of conformance as required in MIL-PRF-38535, appendix A shall be provided with each lot of microcircuits delivered to this drawing.

3.8 Notification of change. Notification of change to DLA Land and Maritime -VA shall be required for any change that affects this drawing.

3.9 Verification and review. DLA Land and Maritime, DLA Land and Maritime's agent, and the acquiring activity retain the option to review the manufacturer's facility and applicable required documentation. Offshore documentation shall be made available onshore at the option of the reviewer.

4. VERIFICATION

4.1 Sampling and inspection. Sampling and inspection procedures shall be in accordance with MIL-PRF-38535, appendix A.

4.2 Screening. Screening shall be in accordance with method 5004 of MIL-STD-883, and shall be conducted on all devices prior to quality conformance inspection. The following additional criteria shall apply:

a. Burn-in test, method 1015 of MIL-STD-883.

(1) Test condition A, B, C or D. The test circuit shall be maintained by the manufacturer under document revision level control and shall be made available to the preparing or acquiring activity upon request. The test circuit shall specify the inputs, outputs, biases, and power dissipation, as applicable, in accordance with the intent specified in method 1015 of MIL-STD-883.

(2) T_A = +125°C, minimum.

b. Interim and final electrical test parameters shall be as specified in table II herein, except interim electrical parameter tests prior to burn-in are optional at the discretion of the manufacturer.

TABLE I. Electrical performance characteristics.

Test	Symbol	Conditions 1/ $-55°C \le T_C \le +125°C$ unless otherwise specified		Group A subgroups	Device type	Limits		Unit
						Min	Max	
High level output voltage	V_{OH1}	V_{IH} = +2.0 V, V_{CC} = +4.5 V, I_{OH} = -12 mA 2/	V_{IL} = 0.8 V	1, 3	01	2.0		V
			V_{IL} = 0.7 V	2	01			
	V_{OH2}	V_{IH} = +2.0 V, V_{CC} = +4.5 V, I_{OH} = -3 mA 2/	V_{IL} = 0.8 V	1, 3	01	2.4		V
			V_{IL} = 0.7 V	2	01			
	V_{OH3}	V_{IH} = +2.0 V, V_{CC} = +4.5 V, I_{OH} = -0.4 mA 2/	V_{IL} = 0.8 V	1, 3	01	2.5		V
			V_{IL} = 0.7 V	2				
Low level output voltage	V_{OL}	I_{OL} = +12 mA V_{CC} = +4.5 V, V_{IH} = +2.0 V 2/	V_{IL} = 0.8 V	1, 3	01		0. 4	V
			V_{IL} = 0.7 V	2				
Input clamp voltage	V_{IC}	I_{IN} = -18 mA, V_{CC} = +4.5 V		1, 2, 3	01		-1.2	V
Off-state output current	I_{OZH}	V_{CC} = +5.5 V, V_{IH} = +2.0 V, V_{OUT} = +2.7 V		1, 2, 3	01		20	µA
	I_{OZL}	V_{CC} = +5.5 V, V_{IH} = +2.0 V, V_{OUT} = +0.4 V		1, 2, 3	01		-20	
High level input current	I_{IH1}	V_{CC} = +5.5 V, V_{IN} = +2.7 V, All other inputs = 0.0 V		1, 2, 3	01		20	µA
	I_{IH2}	V_{CC} = +5.5 V, V_{IN} = +7.0 V, All other inputs = 0.0 V		1, 2, 3	01		0.1	mA
Low level input current	I_{IL}	V_{CC} = +5.5 V, V_{IN} = 0.4 V, All other inputs = 4.5 V		1, 2, 3	01		-0.1	mA
Output current	I_O	V_{CC} = +5.5 V, V_{OUT} = 2.25 V 3/		1, 2, 3	01	-20	-112	mA
Supply current	I_{CCH}	V_{CC} = +5.5 V		1, 2, 3	01		11	mA
	I_{CCL}			1, 2, 3	01		23	mA
Supply current disabled	I_{CCZ}			1, 2, 3	01		25	mA

See footnotes at end of table.

TABLE I. Electrical performance characteristics. - Continued.

Test	Symbol	Conditions $-55°C \le T_C \le +125°C$ unless otherwise specified	Group A subgroups	Device type	Limits		Unit
					Min	Max	
Functional tests		See 4.3.1c 4/	7, 8	01			
Propagation delay time, A to Y	t_{PLH}	V_{CC} = 4.5 V to 5.5 V, C_L = 50 pF, 5/ R_{L1} = 500 Ω ±5% , R_{L2} = 500 Ω ±5% See figure 4	9, 10, 11	01	2	12	ns
	t_{PHL}		9, 10, 11	01	2	9	ns
Output enable time, $\overline{G}$ to Y	t_{PZL}		9, 10, 11	01	5	18	ns
	t_{PZH}		9, 10, 11	01	4	15	ns
Output disable time, $\overline{G}$ to Y	t_{PLZ}		9, 10, 11	01	3	15	ns
	t_{PHZ}		9, 10, 11	01	1	10	ns

1/ Unused inputs that do not directly control the pin under test must be ≥ 2.5 V or ≤ 0.4 V. No unused inputs shall exceed 5.5 V or go less than 0.0 V. No input shall be floated.

2/ All outputs must be tested. In the case where only one input at V_{IL} maximum or V_{IH} minimum produces the proper output state, the test must be performed with each input being selected as the V_{IL} maximum or V_{IH} minimum input.

3/ The output conditions have been chosen to produce a current that closely approximates on half of the true short circuit output current, I_{OS}. Not more than one output shall be tested at one time, and the duration of the test condition shall not exceed one second.

4/ Function tests shall be conducted at input test conditions of GND ≤ V_{IL} ≤ V_{OL} and V_{OH} ≤ V_{IH} ≤ V_{CC}.

5/ Propagation delay limits are based on single output switching. Unused inputs = 3.5 V or ≤ 0.3 V.

Device type 01	
Case outline S	
Terminal number	Terminal symbol
1	$\overline{G}$
2	1A1
3	2Y4
4	1A2
5	2Y3
6	1A3
7	2Y2
8	1A4
9	2Y1
10	GND
11	2A1
12	1Y4
13	2A2
14	1Y3
15	2A3
16	1Y2
17	2A4
18	1Y1
19	2G
20	V_{CC}

FIGURE 1. Terminal connections.

Inputs		Output
$\overline{G}$	A	Y
H	X	Z
L	L	L
L	H	H

H = High level
L = Low level
X = Irrelevant
Z = High impedance

FIGURE 2. Truth table.

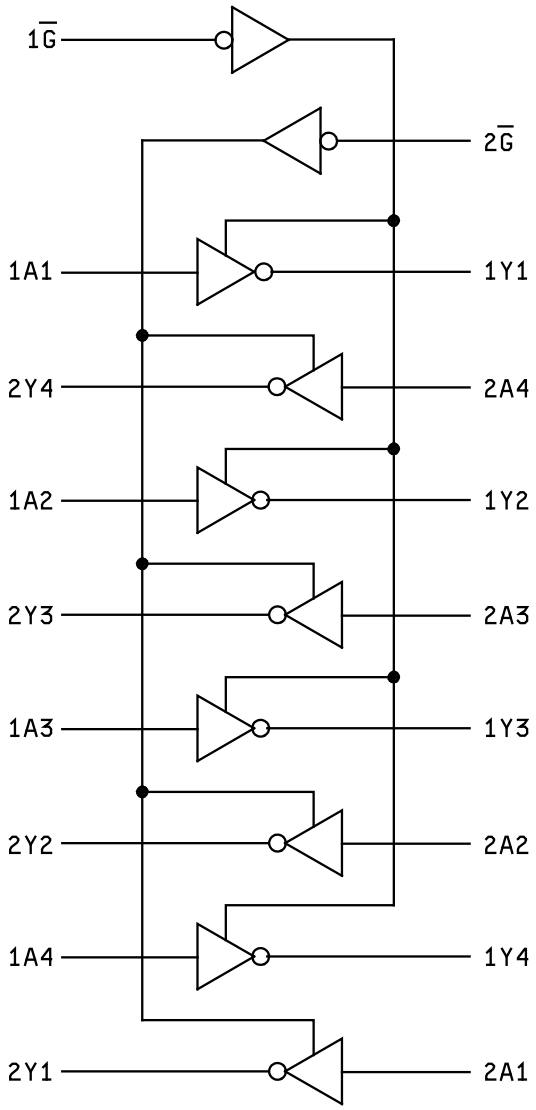

FIGURE 3. Logic diagram.

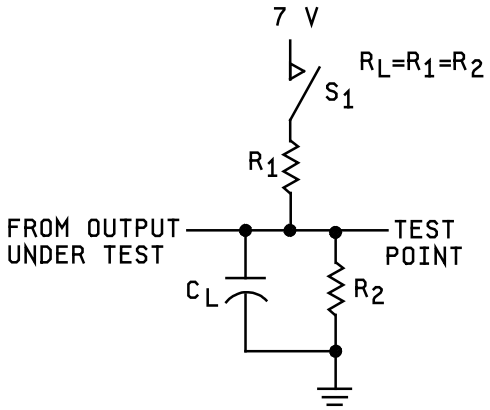

LOAD CIRCUIT FOR
THREE-STATE OUTPUTS

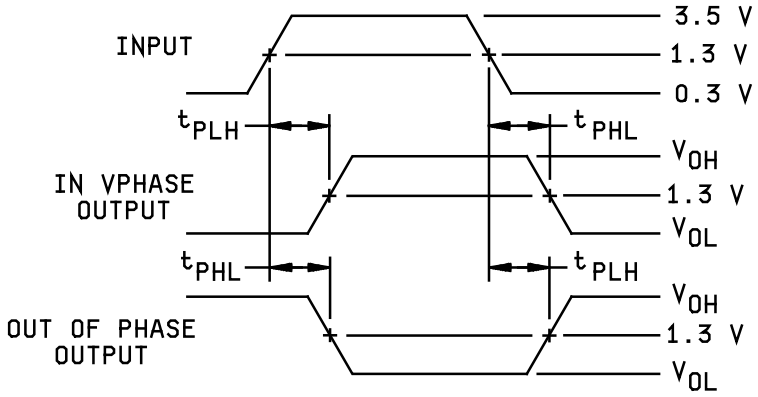

VOLTAGE WAVEFORMS
PROPAGATION DELAY TIMES

FIGURE 4. Switching waveforms and test circuit.

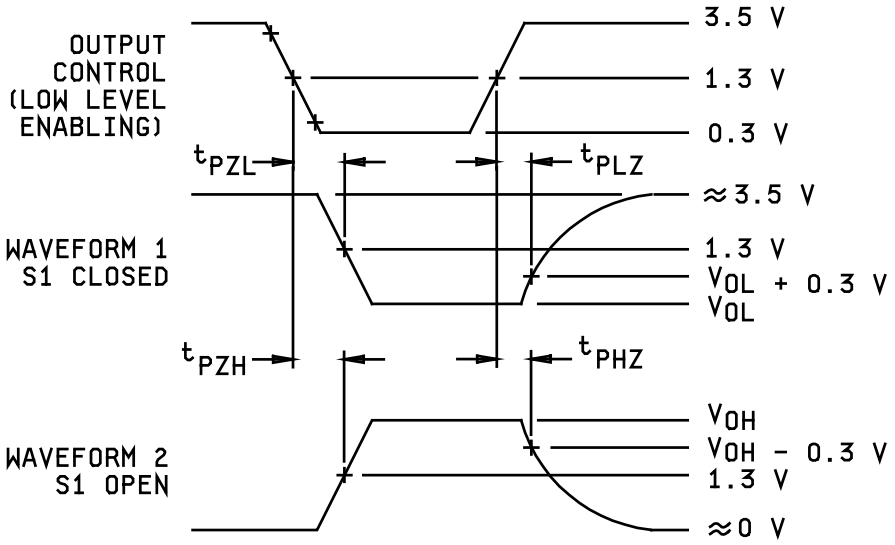

VOLTAGE WAVEFORMS
ENABLE AND DISABLE TIMES
THREE-STATE OUTPUTS

NOTES:

1. C_L includes probe and jig capacitance.
2. All input pulses have the following characteristics: PRR $\leq$ 10 MHz, duty cycle = 50%, t_r = 3 ns $\pm$ 1 ns, t_f = 3 ns $\pm$ 1 ns.
3. The outputs are measured one at a time with one input transition per measurement.
4. Waveform 1 is for an output with internal conditions such that the output is low except when disabled by the output control.
   Waveform 2 is for an output with internal conditions such that the output is high except when disabled by the output control.
5. When measuring propagation delay times of three-state outputs, switch S1 is open.

FIGURE 4. Switching waveforms and test circuit - Continued.

TABLE II. Electrical test requirements.

MIL-STD-883 test requirements	Subgroups (in accordance with MIL-STD-883, method 5005, table I)
Interim electrical parameters (method 5004)	- - -
Final electrical test parameters (method 5004)	1*, 2, 3, 7, 8, 9, 10, 11
Group A test requirements (method 5005)	1, 2, 3, 7, 8, 9, 10, 11
Groups C and D end-point electrical parameters (method 5005)	1, 2, 3

* PDA applies to subgroup 1.

4.3 Quality conformance inspection. Quality conformance inspection shall be in accordance with method 5005 of MIL-STD-883 including groups A, B, C, and D inspections. The following additional criteria shall apply.

4.3.1 Group A inspection.

a. Tests shall be as specified in table II herein.

b. Subgroups 4, 5, and 6 in table I, method 5005 of MIL-STD-883 shall be omitted.

c. Subgroups 7 and 8 shall include verification of the truth table.

4.3.2 Groups C and D inspections.

a. End-point electrical parameters shall be as specified in table II herein.

b. Steady-state life test conditions, method 1005 of MIL-STD-883.

(1) Test condition A, B, C or D. The test circuit shall be maintained by the manufacturer under document revision level control and shall be made available to the preparing or acquiring activity upon request. The test circuit shall specify the inputs, outputs, biases, and power dissipation, as applicable, in accordance with the intent specified in method 1005 of MIL-STD-883.

(2) T_A = +125°C, minimum.

(3) Test duration: 1,000 hours, except as permitted by method 1005 of MIL-STD-883.

5. PACKAGING

5.1 Packaging requirements. The requirements for packaging shall be in accordance with MIL-PRF-38535, appendix A.

6. NOTES

6.1 Intended use. Microcircuits conforming to this drawing are intended for use for Government microcircuit applications (original equipment), design applications, and logistics purposes.

6.2 Replaceability. Microcircuits covered by this drawing will replace the same generic device covered by a contractor-prepared specification or drawing.

6.3 Configuration control of SMD's. All proposed changes to existing SMD's will be coordinated with the users of record for the individual documents. This coordination will be accomplished using DD Form 1692, Engineering Change Proposal.

6.4 Record of users. Military and industrial users shall inform DLA Land and Maritime when a system application requires configuration control and the applicable SMD to that system. DLA Land and Maritime will maintain a record of users and this list will be used for coordination and distribution of changes to the drawings. Users of drawings covering microelectronics devices (FSC 5962) should contact DLA Land and Maritime -VA, telephone (614) 692-8108.

6.5 Comments. Comments on this drawing should be directed to DLA Land and Maritime -VA, Columbus, Ohio 43218-3990, or telephone (614) 692-0540.

6.6 Approved sources of supply. Approved sources of supply are listed in MIL-HDBK-103 and QML-38535. The vendors listed in MIL-HDBK-103 and QML-38535 have agreed to this drawing and a certificate of compliance (see 3.6 herein) has been submitted to and accepted by DLA Land and Maritime -VA.

STANDARD MICROCIRCUIT DRAWING BULLETIN

DATE: 16-01-11

Approved sources of supply for SMD 5962-88591 are listed below for immediate acquisition information only and shall be added to MIL-HDBK-103 and QML-38535 during the next revision. MIL-HDBK-103 and QML-38535 will be revised to include the addition or deletion of sources. The vendors listed below have agreed to this drawing and a certificate of compliance has been submitted to and accepted by DLA Land and Maritime -VA. This information bulletin is superseded by the next dated revision of MIL-HDBK-103 and QML-38535. DLA Land and Maritime maintains an online database of all current sources of supply at http://www.landandmaritime.dla.mil/Programs/Smcr/.

Standard microcircuit drawing PIN 1/	Vendor CAGE number	Vendor similar PIN 2/	Reference military specification part number
5962-8859101SA	01295	SNJ54ALS240AW	M38510/38301BSA
	3/	54ALS240AW/883	
	3/	54ALS240A/BSA	

1/ The lead finish shown for each PIN representing a hermetic package is the most readily available from the manufacturer listed for that part. If the desired lead finish is not listed contact the vendor to determine its availability.
2/ Caution. Do not use this number for item acquisition. Items acquired to this number may not satisfy the performance requirements of this drawing.
3/ Not available from an approved source of supply.

Vendor CAGE number	Vendor name and address
01295	Texas Instruments, Inc. Semiconductor Group 8505 Forest Lane P.O. Box 660199 Dallas, TX 75243

The information contained herein is disseminated for convenience only and the Government assumes no liability whatsoever for any inaccuracies in the information bulletin.