REVISIONS			
LTR	DESCRIPTION	DATE (YR-MO-DA)	APPROVED
A	Add logic diagram. Add notes to figure 4, switching waveforms and test circuit. Update boilerplate to MIL-PRF-38535 requirements. – LTG	05-06-14	Thomas M. Hess
B	Update boilerplate paragraphs to the current MIL-PRF-38535 requirements. - LTG	11-12-19	Thomas M. Hess

REV																			
SHEET																			
REV																			
SHEET																			
REV STATUS				REV			B	B	B	B	B	B	B	B	B	B			
OF SHEETS				SHEET			1	2	3	4	5	6	7	8	9	10			

PMIC N/A

PREPARED BY
James E. Nicklaus

DLA LAND AND MARITIME
COLUMBUS, OHIO 43218-3990
http://www.landandmaritime.dla.mil

STANDARD MICROCIRCUIT DRAWING

THIS DRAWING IS AVAILABLE FOR USE BY ALL DEPARTMENTS AND AGENCIES OF THE DEPARTMENT OF DEFENSE

AMSC N/A

CHECKED BY
D. A. DiCenzo

APPROVED BY
Michael A. Frye

DRAWING APPROVAL DATE
88-08-10

MICROCIRCUIT, DIGITAL, HIGH-SPEED CMOS, DUAL 4-INPUT AND GATE, MONOLITHIC SILICON

REVISION LEVEL
B

SIZE	CAGE CODE	
A	**67268**	**5962-88576**

SHEET 1 OF 10

1. SCOPE

1.1 Scope. This drawing describes device requirements for MIL-STD-883 compliant, non-JAN class level B microcircuits in accordance with MIL-PRF-38535, appendix A.

1.2 Part or Identifying Number (PIN). The complete PIN is as shown in the following example:

5962-88576	01	C	A
Drawing number	Device type (see 1.2.1)	Case outline (see 1.2.2)	Lead finish (see 1.2.3)

1.2.1 Device type(s). The device type(s) identify the circuit function as follows:

Device type	Generic number	Circuit function
01	54HC21	Dual 4-input AND gate

1.2.2 Case outline(s). The case outline(s) are as designated in MIL-STD-1835 and as follows:

Outline letter	Descriptive designator	Terminals	Package style
C	GDIP1-T14 or CDIP2-T14	14	Dual-in-line
D	GDFP1-F14 or CDFP2-F14	14	Flat pack
2	CQCC1-N20	20	Square chip carrier

1.2.3 Lead finish. The lead finish is as specified in MIL-PRF-38535, appendix A.

1.3 Absolute maximum ratings. 1/ 2/ 3/

Supply voltage range (V_{CC}) ..... -0.5 V dc to +7.0 V dc
DC input voltage range (V_{IN}) ..... -0.5 V dc to V_{CC} + 0.5 V dc
DC output voltage range (V_{OUT}) ..... -0.5 V dc to V_{CC} + 0.5 V dc
Clamp diode current (I_{IK}, I_{OK}) ..... ±20 mA
DC output current (per pin) (I_{OUT}) ..... ±25 mA
DC V_{CC} or GND current (per pin) ..... ±50 mA
Storage temperature range (T_{STG}) ..... -65°C to +150°C
Maximum power dissipation (P_D) ..... 500 mW 4/
Lead temperature (soldering, 10 seconds) ..... +260°C
Thermal resistance, junction-to-case (θ_{JC}) ..... See MIL-STD-1835
Junction temperature (T_J) ..... +175°C

1.4 Recommended operating conditions.

Supply voltage range (V_{CC}) ..... +2.0 V dc to +6.0 V dc
Case operating temperature range (T_C) ..... -55°C to +125°C
Input rise or fall time (t_r, t_f):
V_{CC} = 2.0 V ..... 0 to 1000 ns
V_{CC} = 4.5 V ..... 0 to 500 ns
V_{CC} = 6.0 V ..... 0 to 400 ns

1/ Stresses above the absolute maximum rating may cause permanent damage to the device. Extended operation at the maximum levels may degrade performance and affect reliability.
2/ Unless otherwise specified, all voltages are referenced to ground.
3/ The limits for the parameters specified herein shall apply over the full specified V_{CC} range and case temperature range of -55°C to +125°C.
4/ For T_C = +100°C to +125°C, derate linearly at 12 mW/°C.

2. APPLICABLE DOCUMENTS

2.1 Government specification, standards, and handbooks. The following specification, standards, and handbooks form a part of this drawing to the extent specified herein. Unless otherwise specified, the issues of these documents are those cited in the solicitation or contract.

DEPARTMENT OF DEFENSE SPECIFICATION

MIL-PRF-38535 - Integrated Circuits, Manufacturing, General Specification for.

DEPARTMENT OF DEFENSE STANDARDS

MIL-STD-883 - Test Method Standard Microcircuits.
MIL-STD-1835 - Interface Standard Electronic Component Case Outlines.

DEPARTMENT OF DEFENSE HANDBOOKS

MIL-HDBK-103 - List of Standard Microcircuit Drawings.
MIL-HDBK-780 - Standard Microcircuit Drawings.

(Copies of these documents are available online at https://assist.daps.dla.mil/quicksearch/ or from the Standardization Document Order Desk, 700 Robbins Avenue, Building 4D, Philadelphia, PA 19111-5094.)

2.2 Non-Government publications. The following document(s) form a part of this document to the extent specified herein. Unless otherwise specified, the issues of these documents cited in the solicitation or contract.

JEDEC – SOLID STATE TECHNOLOGY ASSOCIATION (JEDEC)

JEDEC Standard No. 7 - Standard for Description of 54/74HCXXXXX and 54/74HCTXXXXX Advanced High-Speed CMOS Devices.

(Copies of these documents are available online at http://www.jedec.org or from JEDEC – Solid State Technology Association, 3103 North 10th Street, Suite 240-S Arlington, VA 22201).

2.3 Order of precedence. In the event of a conflict between the text of this drawing and the references cited herein, the text of this drawing takes precedence. Nothing in this document, however, supersedes applicable laws and regulations unless a specific exemption has been obtained.

3. REQUIREMENTS

3.1 Item requirements. The individual item requirements shall be in accordance with MIL-PRF-38535, appendix A for non-JAN class level B devices and as specified herein. Product built to this drawing that is produced by a Qualified Manufacturer Listing (QML) certified and qualified manufacturer or a manufacturer who has been granted transitional certification to MIL-PRF-38535 may be processed as QML product in accordance with the manufacturers approved program plan and qualifying activity approval in accordance with MIL-PRF-38535. This QML flow as documented in the Quality Management (QM) plan may make modifications to the requirements herein. These modifications shall not affect form, fit, or function of the device. These modifications shall not affect the PIN as described herein. A "Q" or "QML" certification mark in accordance with MIL-PRF-38535 is required to identify when the QML flow option is used.

3.2 Design, construction, and physical dimensions. The design, construction, and physical dimensions shall be as specified in MIL-PRF-38535, appendix A and herein.

3.2.1 Case outlines. The case outlines shall be in accordance with 1.2.2 herein.

3.2.2 Terminal connections. The terminal connections shall be as specified on figure 1.

3.2.3 Truth table. The truth table shall be as specified on figure 2.

3.2.4 Logic diagram. The logic diagram shall be as specified on figure 3.

3.2.5 Switching waveforms and test circuit. The switching waveforms and test circuit shall be as specified on figure 4.

3.3 Electrical performance characteristics. Unless otherwise specified herein, the electrical performance characteristics are as specified in table I and shall apply over the full case operating temperature range.

3.4 Electrical test requirements. The electrical test requirements shall be the subgroups specified in table II. The electrical tests for each subgroup are described in table I.

3.5 Marking. Marking shall be in accordance with MIL-PRF-38535, appendix A. The part shall be marked with the PIN listed in 1.2 herein. In addition, the manufacturer's PIN may also be marked. For packages where marking of the entire SMD PIN number is not feasible due to space limitations, the manufacturer has the option of not marking the "5962-" on the device.

3.5.1 Certification/compliance mark. A compliance indicator “C” shall be marked on all non-JAN devices built in compliance to MIL-PRF-38535, appendix A. The compliance indicator “C” shall be replaced with a "Q" or "QML" certification mark in accordance with MIL-PRF-38535 to identify when the QML flow option is used.

3.6 Certificate of compliance. A certificate of compliance shall be required from a manufacturer in order to be listed as an approved source of supply in MIL-HDBK-103 (see 6.6 herein). The certificate of compliance submitted to DLA Land and Maritime -VA prior to listing as an approved source of supply shall affirm that the manufacturer's product meets the requirements of MIL-PRF-38535, appendix A and the requirements herein.

3.7 Certificate of conformance. A certificate of conformance as required in MIL-PRF-38535, appendix A shall be provided with each lot of microcircuits delivered to this drawing.

3.8 Notification of change. Notification of change to DLA Land and Maritime -VA shall be required for any change that affects this drawing.

3.9 Verification and review. DLA Land and Maritime, DLA Land and Maritime's agent, and the acquiring activity retain the option to review the manufacturer's facility and applicable required documentation. Offshore documentation shall be made available onshore at the option of the reviewer.

TABLE I. Electrical performance characteristics.

Test	Symbol	Test conditions 1/ $-55°C \le T_C \le +125°C$ unless otherwise specified		Device type	Group A subgroups	Limits		Unit
						Min	Max	
High level output voltage	V_{OH}	$V_{IN} = V_{IH}$ or V_{IL} $I_{OH} = -20\ \mu A$	$V_{CC} = 2.0$ V	All	1, 2, 3	1.9		V
			$V_{CC} = 4.5$ V			4.4		
			$V_{CC} = 6.0$ V			5.9		
		$V_{IN} = V_{IH}$ or V_{IL} $I_{OH} = -4.0$ mA	$V_{CC} = 4.5$ V			3.7		
		$V_{IN} = V_{IH}$ or V_{IL} $I_{OH} = -5.2$ mA	$V_{CC} = 6.0$ V			5.2		
Low level output voltage	V_{OL}	$V_{IN} = V_{IH}$ or V_{IL} $I_{OL} = +20\ \mu A$	$V_{CC} = 2.0$ V	All	1, 2, 3		0.1	V
			$V_{CC} = 4.5$ V				0.1	
			$V_{CC} = 6.0$ V				0.1	
		$V_{IN} = V_{IH}$ or V_{IL} $I_{OL} = +4.0$ mA	$V_{CC} = 4.5$ V				0.4	
		$V_{IN} = V_{IH}$ or V_{IL} $I_{OL} = +5.2$ mA	$V_{CC} = 6.0$ V				0.4	
High level input voltage 2/	V_{IH}		$V_{CC} = 2.0$ V	All	1, 2, 3	1.5		V
			$V_{CC} = 4.5$ V			3.15		
			$V_{CC} = 6.0$ V			4.2		
Low level input voltage 2/	V_{IL}		$V_{CC} = 2.0$ V	All	1, 2, 3		0.3	V
			$V_{CC} = 4.5$ V				0.9	
			$V_{CC} = 6.0$ V				1.2	
Input leakage current	I_{IN}	$V_{CC} = 6.0$ V, $V_{IN} = V_{CC}$ or GND		All	1, 2, 3		±1.0	μA
Quiescent current	I_{CC}	$V_{CC} = 6.0$ V, $V_{IN} = V_{CC}$ or GND		All	1, 2, 3		40	μA
Input capacitance	C_{IN}	$V_{IN} = 0.0$ V, $T_C = +25°C$ See 4.3.1c		All	4		10	pF
Functional tests		See 4.3.1d		All	7			
Propagation delay time, input mA, mB, mC, or mD to output mY 3/	t_{PHL}, t_{PLH}	$C_L = 50$ pF ±10% See figure 4	$V_{CC} = 2.0$ V	All	9		175	ns
					10, 11		265	
			$V_{CC} = 4.5$ V		9		35	
					10, 11		53	
			$V_{CC} = 6.0$ V		9		30	
					10, 11		45	
Transition time 4/	t_{THL}, t_{TLH}	$C_L = 50$ pF ±10% See figure 4	$V_{CC} = 2.0$ V	All	9		75	ns
					10, 11		110	
			$V_{CC} = 4.5$ V		9		15	
					10, 11		22	
			$V_{CC} = 6.0$ V		9		13	
					10, 11		19	

See footnotes on next sheet.

TABLE I. Electrical performance characteristics – Continued.

1/ For a power supply of 5.0 V ±10%, the worst case output voltage (V_{OH} and V_{OL}) occur at V_{CC} = 4.5 V. Thus, the 4.5 V values should be used when designing with this supply. Worst case V_{IH} and V_{IL} occur at V_{CC} = 5.5 V and 4.5 V, respectively. (The V_{IH} value at 5.5 V is 3.85 V). The worst case leakage currents (I_{IN} and I_{CC}) occur for CMOS at the higher voltage so the 6.0 V value should be used. Power dissipation capacitance (C_{PD}), typically 100 pF, determines the no-load dynamic power consumption (P_D) and the no-load dynamic current consumption (I_S).
Where:
$P_D = C_{PD} V_{CC}^2 f + I_{CC} V_{CC}$
$I_S = C_{PD} V_{CC} f + I_{CC}$
f is the frequency of the input signal.

2/ Test not required if applied as a forcing function for V_{OH} or V_{OL}.

3/ AC testing at V_{CC} = 2.0 V and V_{CC} = 6.0 V shall be guaranteed, if not tested, to the specified parameters.

4/ Transition time (t_{TLH}, t_{THL}), if not tested, shall be guaranteed to the specified parameters.

Device type	All	
Case outlines	C and D	2
Terminal number	Terminal symbol	Terminal symbol
1	1A	NC
2	1B	1A
3	NC	1B
4	1C	NC
5	1D	NC
6	1Y	1C
7	GND	NC
8	2Y	1D
9	2A	1Y
10	2B	GND
11	NC	NC
12	2C	2Y
13	2D	2A
14	V_{CC}	2B
15	---	NC
16	---	NC
17	---	NC
18	---	2C
19	---	2D
20	---	V_{CC}

NC = No internal connection

FIGURE 1. Terminal connections.

Inputs				Outputs
mA	mB	mC	mD	mY
L	L	L	L	L
L	L	L	H	L
L	L	H	L	L
L	L	H	H	L
L	H	L	L	L
L	H	L	H	L
L	H	H	L	L
L	H	H	H	L
H	L	L	L	L
H	L	L	H	L
H	L	H	L	L
H	L	H	H	L
H	H	L	L	L
H	H	L	H	L
H	H	H	L	L
H	H	H	H	H

H = High voltage level
L = Low voltage level

FIGURE 2. Truth table.

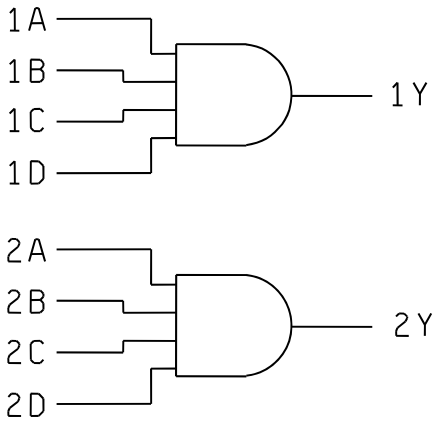

FIGURE 3. Logic diagram.

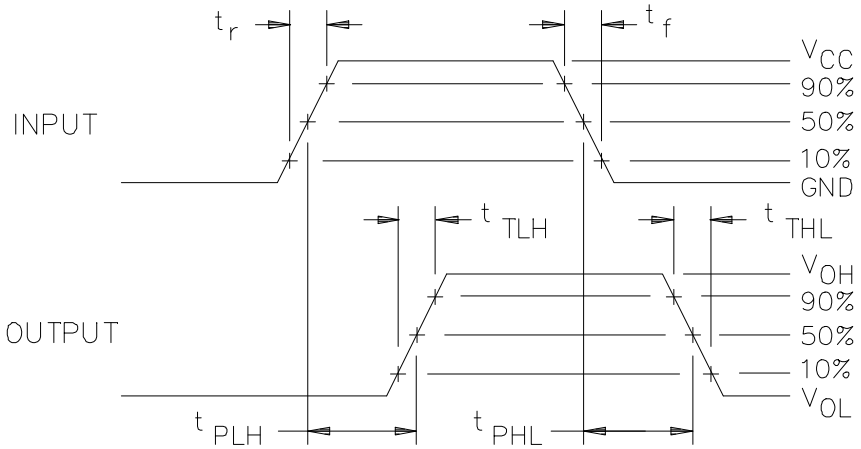

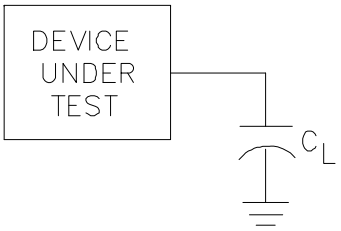

NOTES:

1. C_L = 50 pF minimum or equivalent (includes test jig and probe capacitance).
2. Input signal from pulse generator: V_{IN} = 0.0 V to V_{CC}; PRR ≤ 1 MHz; Z_O = 50Ω; t_r ≤ 6.0 ns; t_f ≤ 6.0 ns; t_r and t_f shall be measured from 10% of V_{CC} to 90% of V_{CC} and from 90% of V_{CC} to 10% of V_{CC}, respectively; duty cycle = 50 percent.
3. The outputs are measured one at a time with one transition per measurement.

FIGURE 4. Switching waveforms and test circuit.

4. VERIFICATION

4.1 Sampling and inspection. Sampling and inspection procedures shall be in accordance with MIL-PRF-38535, appendix A.

4.2 Screening. Screening shall be in accordance with method 5004 of MIL-STD-883, and shall be conducted on all devices prior to quality conformance inspection. The following additional criteria shall apply:

a. Burn-in test, method 1015 of MIL-STD-883.

(1) Test condition A, B, C, or D. The test circuit shall be maintained by the manufacturer under document revision level control and shall be made available to the preparing or acquiring activity upon request. The test circuit shall specify the inputs, outputs, biases, and power dissipation, as applicable, in accordance with the intent specified in method 1015 of MIL-STD-883.

(2) T_A = +125°C, minimum.

b. Interim and final electrical test parameters shall be as specified in table II herein, except interim electrical parameter tests prior to burn-in are optional at the discretion of the manufacturer.

TABLE II. Electrical test requirements.

MIL-STD-883 test requirements	Subgroups (in accordance with MIL-STD-883, method 5005, table I)
Interim electrical parameters (method 5004)	-----
Final electrical test parameters (method 5004)	1*, 2, 9
Group A test requirements (method 5005)	1, 2, 3, 4, 7, 9, 10**, 11**
Groups C and D end-point electrical parameters (method 5005)	1, 2, 3

* PDA applies to subgroup 1.
** Subgroups 10 and 11 if not tested, shall be guaranteed to the specified limits in table I.

4.3 Quality conformance inspection. Quality conformance inspection shall be in accordance with method 5005 of MIL-STD-883 including groups A, B, C, and D inspections. The following additional criteria shall apply.

4.3.1 Group A inspection.

a. Tests shall be as specified in table II herein.

b. Subgroups 5, 6, and 8 in table I, method 5005 of MIL-STD-883 shall be omitted.

c. Subgroup 4 (C_{IN} measurement) shall be measured only for the initial test and after process or design changes which may affect input capacitance.

d. Subgroup 7 shall include verification of the truth table as specified in figure 2 herein.

4.3.2 Groups C and D inspections.

a. End-point electrical parameters shall be as specified in table II herein.

b. Steady-state life test conditions, method 1005 of MIL-STD-883.

(1) Test condition A, B, C, or D. The test circuit shall be maintained by the manufacturer under document revision level control and shall be made available to the preparing or acquiring activity upon request. The test circuit shall specify the inputs, outputs, biases, and power dissipation, as applicable, in accordance with the intent specified in method 1005 of MIL-STD-883.

(2) T_A = +125°C, minimum.

(3) Test duration: 1,000 hours, except as permitted by method 1005 of MIL-STD-883.

5. PACKAGING

5.1 Packaging requirements. The requirements for packaging shall be in accordance with MIL-PRF-38535, appendix A.

6. NOTES

6.1 Intended use. Microcircuits conforming to this drawing are intended for use for Government microcircuit applications (original equipment), design applications, and logistics purposes.

6.2 Replaceability. Microcircuits covered by this drawing will replace the same generic device covered by a contractor-prepared specification or drawing.

6.3 Configuration control of SMD's. All proposed changes to existing SMD's will be coordinated with the users of record for the individual documents. This coordination will be accomplished using DD Form 1692, Engineering Change Proposal.

6.4 Record of users. Military and industrial users shall inform DLA Land and Maritime when a system application requires configuration control and the applicable SMD to that system. DLA Land and Maritime will maintain a record of users and this list will be used for coordination and distribution of changes to the drawings. Users of drawings covering microelectronics devices (FSC 5962) should contact DLA Land and Maritime -VA, telephone (614) 692-0544.

6.5 Comments. Comments on this drawing should be directed to DLA Land and Maritime -VA, Columbus, Ohio 43218-3990, or telephone (614) 692-0540.

6.6 Approved sources of supply. Approved sources of supply are listed in MIL-HDBK-103. The vendors listed in MIL-HDBK-103 have agreed to this drawing and a certificate of compliance (see 3.6 herein) has been submitted to and accepted by DLA Land and Maritime -VA.

STANDARD MICROCIRCUIT DRAWING BULLETIN

DATE: 11-12-19

Approved sources of supply for SMD 5962-88576 are listed below for immediate acquisition information only and shall be added to MIL-HDBK-103 and QML-38535 during the next revision. MIL-HDBK-103 and QML-38535 will be revised to include the addition or deletion of sources. The vendors listed below have agreed to this drawing and a certificate of compliance has been submitted to and accepted by DLA Land and Maritime -VA. This information bulletin is superseded by the next dated revision of MIL-HDBK-103 and QML-38535. DLA Land and Maritime maintains an online database of all current sources of supply at http://www.landandmaritime.dla.mil/Programs/Smcr/.

Standard microcircuit drawing PIN 1/	Vendor CAGE number	Vendor similar PIN 2/
5962-8857601CA	01295	SNJ54HC21J
5962-8857601DA	3/	SNJ54HC21W
5962-88576012A	01295	SNJ54HC21FK

1/ The lead finish shown for each PIN representing a hermetic package is the most readily available from the manufacturer listed for that part. If the desired lead finish is not listed contact the vendor to determine its availability.

2/ Caution. Do not use this number for item acquisition. Items acquired to this number may not satisfy the performance requirements of this drawing.

3/ Not available from an approved source of supply.

Vendor CAGE number	Vendor name and address
01295	Texas Instruments Incorporated Semiconductor Group 8505 Forest Lane P.O. Box 660199 Dallas, TX 75243 Point of contact: U.S. Highway 75 South P.O. Box 84, M/S 853 Sherman, TX 75090-9493

The information contained herein is disseminated for convenience only and the Government assumes no liability whatsoever for any inaccuracies in the information bulletin.