| REVISIONS | | | |
|---|---|---|---|
| LTR | DESCRIPTION | DATE (YR-MO-DA) | APPROVED |
| B | Inactivate device 01EX and 012X for new design. Add vendor CAGE 27014 to case outline "2". Convert to military drawing format. Editorial changes throughout. | 87-12-16 | M. A. Frye |
| C | Add vendor CAGE F8859. Add device class V criteria. Add table III. Correct data limits in paragraph 1.3. Add case outline X. Update boilerplate. Editorial changes throughout. --les | 00-07-19 | Raymond Monnin |
| D | Correct table II. Update boilerplate to MIL-PRF- 38535 requirements. – jak | 02-01-18 | Thomas M. Hess |
| E | Change address. Add JEDEC Standard 7-A reference in paragraphs 2.2 and 4.4.1c. Update boilerplate paragraphs to the current requirements as specified in MIL-PRF-38535. - jak | 09-08-21 | Thomas M. Hess |
| F | Update source of supply information. Update boilerplate paragraphs to the current requirements as specified in MIL-PRF-38535. - jwc | 16-01-27 | Muhammad Akbar |

**CURRENT CAGE CODE 67268**

| | | | | | | | | | | | | | | | | | | | | |
|---|---|---|---|---|---|---|---|---|---|---|---|---|---|---|---|---|---|---|---|---|
| REV | | | | | | | | | | | | | | | | | | | | |
| SHEET | | | | | | | | | | | | | | | | | | | | |
| REV | F | F | | | | | | | | | | | | | | | | | | |
| SHEET | 15 | 16 | | | | | | | | | | | | | | | | | | |

| REV STATUS OF SHEETS | | | | | | | | | | | | | | | |
|---|---|---|---|---|---|---|---|---|---|---|---|---|---|---|---|
| REV | F | F | F | F | F | F | F | F | F | F | F | F | F | F | F |
| SHEET | 1 | 2 | 3 | 4 | 5 | 6 | 7 | 8 | 9 | 10 | 11 | 12 | 13 | 14 | |

PMIC N/A

**STANDARD MICROCIRCUIT DRAWING**

THIS DRAWING IS AVAILABLE FOR USE BY ALL DEPARTMENTS

AND AGENCIES OF THE DEPARTMENT OF DEFENSE

AMSC N/A

PREPARED BY
James Nicklaus

CHECKED BY
D. A. DiCenzo

APPROVED BY
Michael A. Frye

DRAWING APPROVAL DATE
84-09-25

REVISION LEVEL
F

**DLA LAND AND MARITIME**
**COLUMBUS, OHIO 43218-3990**
**http://www.landandmaritime.dla.mil**

MICROCIRCUIT, DIGITAL, HIGH-SPEED CMOS, QUAD D-TYPE FLIP-FLOP, WITH CLEAR MONOLITHIC SILICON

| SIZE | CAGE CODE | |
|---|---|---|
| **A** | **14933** | **84089** |

SHEET 1 OF 16

1. SCOPE

1.1 Scope. This drawing documents two product assurance class levels consisting of high reliability (device classes Q and M) and space application (device class V). A choice of case outlines and lead finishes are available and are reflected in the Part or Identifying Number (PIN). When available, a choice of Radiation Hardness Assurance (RHA) levels is reflected in the PIN.

1.2 PIN. The PIN is as shown in the following examples.

For device classes M and Q:

| 84089 | 01 | E | A |
|---|---|---|---|
| Drawing number | Device type (see 1.2.2) | Case outline (see 1.2.4) | Lead finish (see 1.2.5) |

For device class V:

| 5962 | - | 84089 | 01 | V | X | A |
|---|---|---|---|---|---|---|
| Federal stock class designator | RHA designator (see 1.2.1) | | Device type (see 1.2.2) | Device class designator (see 1.2.3) | Case outline (see 1.2.4) | Lead finish (see 1.2.5) |

_____ _____/
\/
Drawing number

1.2.1 RHA designator. Device classes Q and V RHA marked devices meet the MIL-PRF-38535 specified RHA levels and are marked with the appropriate RHA designator. Device class M RHA marked devices meet the MIL-PRF-38535, appendix A specified RHA levels and are marked with the appropriate RHA designator. A dash (-) indicates a non-RHA device.

1.2.2 Device type(s). The device type(s) identify the circuit function as follows:

| Device type | Generic number | Circuit function |
|---|---|---|
| 01 | 54HC175 | Quad D-Type flip-flop, with clear |

1.2.3 Device class designator. The device class designator is a single letter identifying the product assurance level as listed below. Since the device class designator has been added after the original issuance of this drawing, device classes M and Q designators will not be included in the PIN and will not be marked on the device.

| Device class | Device requirements documentation |
|---|---|
| M | Vendor self-certification to the requirements for MIL-STD-883 compliant, non-JAN class level B microcircuits in accordance with MIL-PRF-38535, appendix A |
| Q or V | Certification and qualification to MIL-PRF-38535 |

1.2.4 Case outline(s). The case outline(s) are as designated in MIL-STD-1835 and as follows:

| Outline letter | Descriptive designator | Terminals | Package style |
|---|---|---|---|
| E | GDIP1-T16 or CDIP2-T16 | 16 | Dual-in-line |
| F | GDFP2-F16 or CDFP3-F16 | 16 | Flat pack |
| 2 | CQCC1-N20 | 20 | Square leadless chip carrier |
| X | CDFP4-F16 | 16 | Flat pack |

1.2.5 Lead finish. The lead finish is as specified in MIL-PRF-38535 for device classes Q and V or MIL-PRF-38535, appendix A for device class M.

1.3 Absolute maximum ratings. 1/ 2/ 3/

Supply voltage range ($V_{CC}$) ..... -0.5 V dc to +7.0 V dc
DC input voltage range ($V_{IN}$) ..... -0.5 V dc to $V_{CC}$ +0.5 V dc
DC output voltage range ($V_{OUT}$) ..... -0.5 V dc to $V_{CC}$ +0.5 V dc
Input clamp current ($I_{IK}$) ..... ±20 mA
Output clamp current ($I_{OK}$) ..... ±20 mA
Continuous output current ..... ±25 mA
Continuous current through $V_{CC}$ or GND ..... ±50 mA
Storage temperature range ($T_{STG}$) ..... -65°C to +150°C
Maximum power dissipation ($P_D$): ..... 500 mW 4/
Lead temperature (soldering, 10 seconds) ..... +260°C
Thermal resistance, junction-to-case ($\theta_{JC}$) ..... See MIL-STD-1835
Junction temperature ($T_J$) ..... +175°C 5/

1.4 Recommended operating conditions. 2/ 3/

Supply voltage range ($V_{CC}$) ..... +2.0 V dc to +6.0 V dc
Case operating temperature range ($T_C$) ..... -55°C to +125°C
Input rise or fall time $t_r$, $t_f$):
$V_{CC}$ = 2.0 V ..... 0 to 1,000 ns
$V_{CC}$ = 4.5 V ..... 0 to 500 ns
$V_{CC}$ = 6.0 V ..... 0 to 400 ns

---

1/ Stresses above the absolute maximum rating may cause permanent damage to the device. Extended operation at the maximum levels may degrade performance and affect reliability.
2/ Unless otherwise specified, all voltages are referenced to GND.
3/ The limits for the parameters specified herein shall apply over the full specified $V_{CC}$ range and case temperature range of -55°C to +125°C.
4/ For $T_C$ = +100°C to +125°C, derate linearly at 12 mW/°C.
5/ Maximum junction temperature shall not be exceeded except for allowable short duration burn-in screening conditions in accordance with method 5004 of MIL-STD-883.

2. APPLICABLE DOCUMENTS

2.1 Government specification, standards, and handbooks. The following specification, standards, and handbooks form a part of this drawing to the extent specified herein. Unless otherwise specified, the issues of these documents are those cited in the solicitation or contract.

DEPARTMENT OF DEFENSE SPECIFICATION

MIL-PRF-38535 - Integrated Circuits, Manufacturing, General Specification for.

DEPARTMENT OF DEFENSE STANDARDS

MIL-STD-883 - Test Method Standard Microcircuits.
MIL-STD-1835 - Interface Standard Electronic Component Case Outlines.

DEPARTMENT OF DEFENSE HANDBOOKS

MIL-HDBK-103 - List of Standard Microcircuit Drawings.
MIL-HDBK-780 - Standard Microcircuit Drawings.

(Copies of these documents are available online at http://quicksearch.dla.mil or from the Standardization Document Order Desk, 700 Robbins Avenue, Building 4D, Philadelphia, PA 19111-5094.)

2.2 Non-Government publications. The following document(s) form a part of this document to the extent specified herein. Unless otherwise specified, the issues of these documents are those cited in the solicitation or contract.

JEDEC – SOLID STATE TECHNOLOGY ASSOCIATION (JEDEC)

JESD20 - Standard for Description of 54/74ACXXXX and 54/74ACTXXXX Advanced High-Speed CMOS Devices.

(Copies of these documents are available online at http://www.jedec.org or from JEDEC – Solid State Technology Association, 3103 North 10th Street, Suite 240–S, Arlington, VA 22201.)

2.3 Order of precedence. In the event of a conflict between the text of this drawing and the references cited herein, the text of this drawing takes precedence. Nothing in this document, however, supersedes applicable laws and regulations unless a specific exemption has been obtained.

3. REQUIREMENTS

3.1 Item requirements. The individual item requirements for device classes Q and V shall be in accordance with MIL-PRF-38535 and as specified herein or as modified in the device manufacturer's Quality Management (QM) plan. The modification in the QM plan shall not affect the form, fit, or function as described herein. The individual item requirements for device class M shall be in accordance with MIL-PRF-38535, appendix A for non-JAN class level B devices and as specified herein.

3.2 Design, construction, and physical dimensions. The design, construction, and physical dimensions shall be as specified in MIL-PRF-38535 and herein for device classes Q and V or MIL-PRF-38535, appendix A and herein for device class M.

3.2.1 Case outlines. The case outlines shall be in accordance with 1.2.4 herein.

3.2.2 Terminal connections. The terminal connections shall be as specified on figure 1.

3.2.3 Truth table. The truth table shall be as specified on figure 2.

3.2.4 Logic diagram. The logic diagram shall be as specified on figure 3.

3.2.5 Switching waveforms and test circuit. The switching waveforms and test circuit shall be as specified in figure 4.

3.3 Electrical performance characteristics and postirradiation parameter limits. Unless otherwise specified herein, the electrical performance characteristics and postirradiation parameter limits are as specified in table I and shall apply over the full case operating temperature range.

3.4 Electrical test requirements. The electrical test requirements shall be the subgroups specified in table II. The electrical tests for each subgroup are defined in table I.

3.5 Marking. The part shall be marked with the PIN listed in 1.2 herein. In addition, the manufacturer's PIN may also be marked. For packages where marking of the entire SMD PIN number is not feasible due to space limitations, the manufacturer has the option of not marking the "5962-" on the device. For RHA product using this option, the RHA designator shall still be marked. Marking for device classes Q and V shall be in accordance with MIL-PRF-38535. Marking for device class M shall be in accordance with MIL-PRF-38535, appendix A.

3.5.1 Certification/compliance mark. The certification mark for device classes Q and V shall be a "QML" or "Q" as required in MIL-PRF-38535. The compliance mark for device class M shall be a "C" as required in MIL-PRF-38535, appendix A.

3.6 Certificate of compliance. For device classes Q and V, a certificate of compliance shall be required from a QML-38535 listed manufacturer in order to supply to the requirements of this drawing (see 6.6.1 herein). For device class M, a certificate of compliance shall be required from a manufacturer in order to be listed as an approved source of supply in MIL-HDBK-103 (see 6.6.2 herein). The certificate of compliance submitted to DLA Land and Maritime-VA prior to listing as an approved source of supply for this drawing shall affirm that the manufacturer's product meets, for device classes Q and V, the requirements of MIL-PRF-38535 and herein or for device class M, the requirements of MIL-PRF-38535, appendix A and herein.

3.7 Certificate of conformance. A certificate of conformance as required for device classes Q and V in MIL-PRF-38535 or for device class M in MIL-PRF-38535, appendix A shall be provided with each lot of microcircuits delivered to this drawing.

3.8 Notification of change for device class M. For device class M, notification to DLA Land and Maritime-VA of change of product (see 6.2 herein) involving devices acquired to this drawing is required for any change that affects this drawing.

3.9 Verification and review for device class M. For device class M, DLA Land and Maritime, DLA Land and Maritime's agent, and the acquiring activity retain the option to review the manufacturer's facility and applicable required documentation. Offshore documentation shall be made available onshore at the option of the reviewer.

3.10 Microcircuit group assignment for device class M. Device class M devices covered by this drawing shall be in microcircuit group number 38 (see MIL-PRF-38535, appendix A).

TABLE I. Electrical performance characteristics.

| Test | Symbol | Test conditions 1/ -55°C ≤ $T_C$ ≤ +125°C unless otherwise specified | | Group A subgroups | Limits | | Unit |
|---|---|---|---|---|---|---|---|
| | | | | | Min | Max | |
| High level output voltage | $V_{OH}$ | $V_{IN}$ = $V_{IH}$ minimum or $V_{IL}$ maximum $I_{OH}$ = -20 μA | $V_{CC}$ = 2.0 V | 1, 2, 3 | 1.9 | | V |
| | | | $V_{CC}$ = 4.5 V | | 4.4 | | |
| | | | $V_{CC}$ = 6.0 V | | 5.9 | | |
| | | $V_{IN}$ = $V_{IH}$ minimum or $V_{IL}$ maximum $I_{OH}$ = -4.0 mA | $V_{CC}$ = 4.5 V | 1 | 3.98 | | |
| | | | $V_{CC}$ = 4.5 V | 2, 3 | 3.7 | | |
| | | $V_{IN}$ = $V_{IH}$ minimum or $V_{IL}$ maximum $I_{OH}$ = -5.2 mA | $V_{CC}$ = 6.0 V | 1 | 5.48 | | |
| | | | $V_{CC}$ = 6.0 V | 2, 3 | 5.2 | | |
| Low level output voltage | $V_{OL}$ | $V_{IN}$ = $V_{IH}$ minimum or $V_{IL}$ maximum $I_{OH}$ = 20 μA | $V_{CC}$ = 2.0 V | 1, 2, 3 | | 0.1 | V |
| | | | $V_{CC}$ = 4.5 V | | | 0.1 | |
| | | | $V_{CC}$ = 6.0 V | | | 0.1 | |
| | | $V_{IN}$ = $V_{IH}$ minimum or $V_{IL}$ maximum $I_{OH}$ = 4.0 mA | $V_{CC}$ = 4.5 V | 1 | | 0.26 | |
| | | | $V_{CC}$ = 4.5 V | 2, 3 | | 0.4 | |
| | | $V_{IN}$ = $V_{IH}$ minimum or $V_{IL}$ maximum $I_{OH}$ = 5.2 mA | $V_{CC}$ = 6.0 V | 1 | | 0.26 | |
| | | | $V_{CC}$ = 6.0 V | 2, 3 | | 0.4 | |
| High level input voltage | $V_{IH}$ 2/ | | $V_{CC}$ = 2.0 V | 1, 2, 3 | 1.5 | | V |
| | | | $V_{CC}$ = 4.5 V | | 3.15 | | |
| | | | $V_{CC}$ = 6.0 V | | 4.2 | | |
| Low level input voltage | $V_{IL}$ 2/ | | $V_{CC}$ = 2.0 V | 1, 2, 3 | | 0.3 | V |
| | | | $V_{CC}$ = 4.5 V | | | 0.9 | |
| | | | $V_{CC}$ = 6.0 V | | | 1.2 | |
| Input capacitance | $C_{IN}$ | $V_{CC}$ = 2 V to 6 V, $T_C$ = +25°C See 4.4.1c | | 4 | | 10.0 | pF |
| Quiescent supply current | $I_{CC}$ | $V_{IN}$ = $V_{CC}$ or GND $V_{CC}$ = 6.0 V, $I_O$ = 0 μA | | 1 | | 8.0 | μA |
| | | | | 2, 3 | | 160.0 | |

See footnotes at end of table.

TABLE I. Electrical performance characteristics - Continued.

| Test | Symbol | Test conditions 1/ $-55°C \le T_C \le +125°C$ unless otherwise specified | | Group A subgroups | Limits Min | Limits Max | Unit |
|---|---|---|---|---|---|---|---|
| Input leakage current | $I_{IN}$ | $V_{CC}$ = 6.0 V, $V_{IN}$ = $V_{CC}$ or GND | | 1 | | ±0.1 | µA |
| | | | | 2, 3 | | ±1.0 | |
| Functional tests | | See 4.4.1b | | 7, 8 | | | |
| Power dissipation capacitance (per flip-flop) | $C_{PD}$ | See 4.4.1c | | 4 | | 47.0 | pF |
| Propagation delay time, CLK to Q or $\overline{Q}$ | $t_{PHL1}$ $t_{PLH1}$ 3/ | $T_C$ = +25°C CL = 50 pF See figure 4 | $V_{CC}$ = 2.0 V | 9 | | 150 | ns |
| | | | $V_{CC}$ = 4.5 V | | | 30 | |
| | | | $V_{CC}$ = 6.0 V | | | 26 | |
| | | $T_C$ = -55°C, +125°C $C_L$ = 50 pF See figure 4 | $V_{CC}$ = 2.0 V | 10, 11 | | 255 | ns |
| | | | $V_{CC}$ = 4.5 V | | | 45 | |
| | | | $V_{CC}$ = 6.0 V | | | 38 | |
| Propagation delay time, $\overline{CLR}$ to Q or $\overline{Q}$ | $t_{PHL2}$ $t_{PLH2}$ 3/ | $T_C$ = +25°C $C_L$ = 50 pF See figure 4 | $V_{CC}$ = 2.0 V | 9 | | 150 | ns |
| | | | $V_{CC}$ = 4.5 V | | | 30 | |
| | | | $V_{CC}$ = 6.0 V | | | 26 | |
| | | $T_C$ = -55°C, +125°C $C_L$ = 50 pF See figure 4 | $V_{CC}$ = 2.0 V | 10, 11 | | 255 | ns |
| | | | $V_{CC}$ = 4.5 V | | | 45 | |
| | | | $V_{CC}$ = 6.0 V | | | 38 | |
| Recovery time, $\overline{CLR}$ inactive to CLK | $t_{rec}$ | $T_C$ = +25°C CL = 50 pF See figure 4 | $V_{CC}$ = 2.0 V | 9 | 100 | | ns |
| | | | $V_{CC}$ = 4.5 V | | 20 | | |
| | | | $V_{CC}$ = 6.0 V | | 17 | | |
| | | $T_C$ = -55°C, +125°C $C_L$ = 50 pF See figure 4 | $V_{CC}$ = 2.0 V | 10, 11 | 150 | | ns |
| | | | $V_{CC}$ = 4.5 V | | 30 | | |
| | | | $V_{CC}$ = 6.0 V | | 25 | | |

See footnotes at end of table.

TABLE I. Electrical performance characteristics - Continued.

| Test | Symbol | Test conditions 1/ -55°C ≤ $T_C$ ≤ +125°C unless otherwise specified | | Group A subgroups | Limits | | Unit |
|---|---|---|---|---|---|---|---|
| | | | | | Min | Max | |
| Setup time, data to CLK | $t_s$ | $T_C$ = +25°C<br>CL = 50 pF<br>See figure 4 | $V_{CC}$ = 2.0 V | 9 | 100 | | ns |
| | | | $V_{CC}$ = 4.5 V | | 20 | | |
| | | | $V_{CC}$ = 6.0 V | | 17 | | |
| | | $T_C$ = -55°C, +125°C<br>$C_L$ = 50 pF<br>See figure 4 | $V_{CC}$ = 2.0 V | 10, 11 | 150 | | |
| | | | $V_{CC}$ = 4.5 V | | 30 | | |
| | | | $V_{CC}$ = 6.0 V | | 25 | | |
| Pulse width, $\overline{CLR}$ or CLK | $t_w$ | $T_C$ = +25°C<br>$C_L$ = 50 pF<br>See figure 4 | $V_{CC}$ = 2.0 V | 9 | 80 | | ns |
| | | | $V_{CC}$ = 4.5 V | | 16 | | |
| | | | $V_{CC}$ = 6.0 V | | 14 | | |
| | | $T_C$ = -55°C, +125°C<br>$C_L$ = 50 pF<br>See figure 4 | $V_{CC}$ = 2.0 V | 10, 11 | 120 | | ns |
| | | | $V_{CC}$ = 4.5 V | | 24 | | |
| | | | $V_{CC}$ = 6.0 V | | 20 | | |
| Hold time, data from CLK | $t_h$ | $T_C$ = +25°C<br>$C_L$ = 50 pF<br>See figure 4 | $V_{CC}$ = 2.0 V | 9 | 0 | | ns |
| | | | $V_{CC}$ = 4.5 V | | 0 | | |
| | | | $V_{CC}$ = 6.0 V | | 0 | | |
| | | $T_C$ = -55°C, +125°C<br>$C_L$ = 50 pF<br>See figure 4 | $V_{CC}$ = 2.0 V | 10, 11 | 0 | | ns |
| | | | $V_{CC}$ = 4.5 V | | 0 | | |
| | | | $V_{CC}$ = 6.0 V | | 0 | | |

See footnotes at end of table.

TABLE I. Electrical performance characteristics - Continued.

| Test | Symbol | Test conditions 1/ $-55°C \le T_C \le +125°C$ unless otherwise specified | | Group A subgroups | Limits | | Unit |
|---|---|---|---|---|---|---|---|
| | | | | | Min | Max | |
| Maximum CLK frequency | $f_{MAX}$ | $T_C$ = +25°C<br>$C_L$ = 50 pF<br>See figure 4 | $V_{CC}$ = 2.0 V | 9 | 6 | | MHz |
| | | | $V_{CC}$ = 4.5 V | | 31 | | |
| | | | $V_{CC}$ = 6.0 V | | 36 | | |
| | | $T_C$ = -55°C, +125°C<br>$C_L$ = 50 pF<br>See figure 4 | $V_{CC}$ = 2.0 V | 10, 11 | 4.2 | | MHz |
| | | | $V_{CC}$ = 4.5 V | | 21 | | |
| | | | $V_{CC}$ = 6.0 V | | 25 | | |
| Transition time, high to low, low to high | $t_{THL}$<br>$t_{TLH}$<br>4/ | $T_C$ = +25°C<br>$C_L$ = 50 pF<br>See figure 4 | $V_{CC}$ = 2.0 V | 9 | | 75 | ns |
| | | | $V_{CC}$ = 4.5 V | | | 15 | |
| | | | $V_{CC}$ = 6.0 V | | | 13 | |
| | | $T_C$ = -55°C, +125°C<br>$C_L$ = 50 pF<br>See figure 4 | $V_{CC}$ = 2.0 V | 10, 11 | | 110 | ns |
| | | | $V_{CC}$ = 4.5 V | | | 22 | |
| | | | $V_{CC}$ = 6.0 V | | | 19 | |

1/ For a power supply of 5 V ±10%, the worst case output voltages ($V_{OH}$ and $V_{OL}$) occur for HC at 4.5 V. Thus, the 4.5 V values should be used when designing with this supply. Worst cases $V_{IH}$ and $V_{IL}$ occur at $V_{CC}$ = 5.5 V and 4.5 V respectively. (The $V_{IH}$ value at 5.5 V is 3.85 V.) The worst case leakage currents ($I_{IN}$, $I_{CC}$, and $I_{OZ}$) occur for CMOS at the higher voltage, so the 6.0 V values should be used. Power dissipation capacitance ($C_{PD}$), typically 50 pF per latch, determines the no load dynamic power consumption, $P_D = (C_{PD} V_{CC}^2 f) + (I_{CC} V_{CC})$, and the no load dynamic current consumption, $I_S = C_{PD} V_{CC} f + I_{CC}$.

2/ $V_{IH}$ and $V_{IL}$ tests are not required and shall be applied as forcing functions for the $V_{OH}$ or $V_{OL}$ tests.

3/ AC testing at $V_{CC}$ = 2.0 V and $V_{CC}$ = 6.0 V shall be guaranteed, if not tested, to the specified limits.

4/ Transition time ($t_{TLH}$, $t_{THL}$), if not tested, shall be guaranteed to the specified limits in table I.

| Device type | 01 | |
|---|---|---|
| Case Outline | E, F and X | 2 |
| Terminal Number | Terminal Symbol | Terminal Symbol |
| 1 | $\overline{CLR}$ | NC |
| 2 | 1Q | $\overline{CLR}$ |
| 3 | $1\overline{Q}$ | 1Q |
| 4 | 1D | $1\overline{Q}$ |
| 5 | 2D | 1D |
| 6 | $2\overline{Q}$ | NC |
| 7 | 2Q | 2D |
| 8 | GND | $2\overline{Q}$ |
| 9 | CLK | 2Q |
| 10 | 3Q | GND |
| 11 | $3\overline{Q}$ | NC |
| 12 | 3D | CLK |
| 13 | 4D | 3Q |
| 14 | $4\overline{Q}$ | $3\overline{Q}$ |
| 15 | 4Q | 3D |
| 16 | $V_{CC}$ | NC |
| 17 | - - - | 4D |
| 18 | - - - | $4\overline{Q}$ |
| 19 | - - - | 4Q |
| 20 | - - - | $V_{CC}$ |

NC = No internal connections.

FIGURE 1. Terminal connections.

(each flip-flop)

| Inputs | | | Outputs | |
|---|---|---|---|---|
| $\overline{CLR}$ | CLK | D | Q | $\overline{Q}$ |
| L | X | X | L | H |
| H | ↑ | H | H | L |
| H | ↑ | L | L | H |
| H | L | X | $Q_0$ | $\overline{Q}_0$ |

H = High voltage level
L = Low voltage level
X = Irrelevent
↑ = Transition from low to high level
$Q_0$ = The level of Q before the indicated steady-state input conditions were established.

FIGURE 2. Truth table.

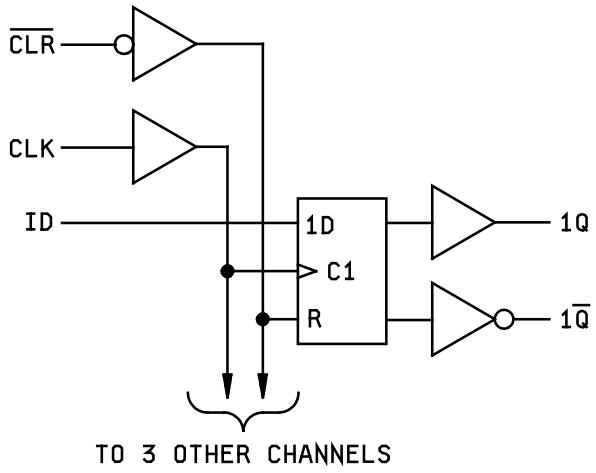


FIGURE 3. Logic diagram.

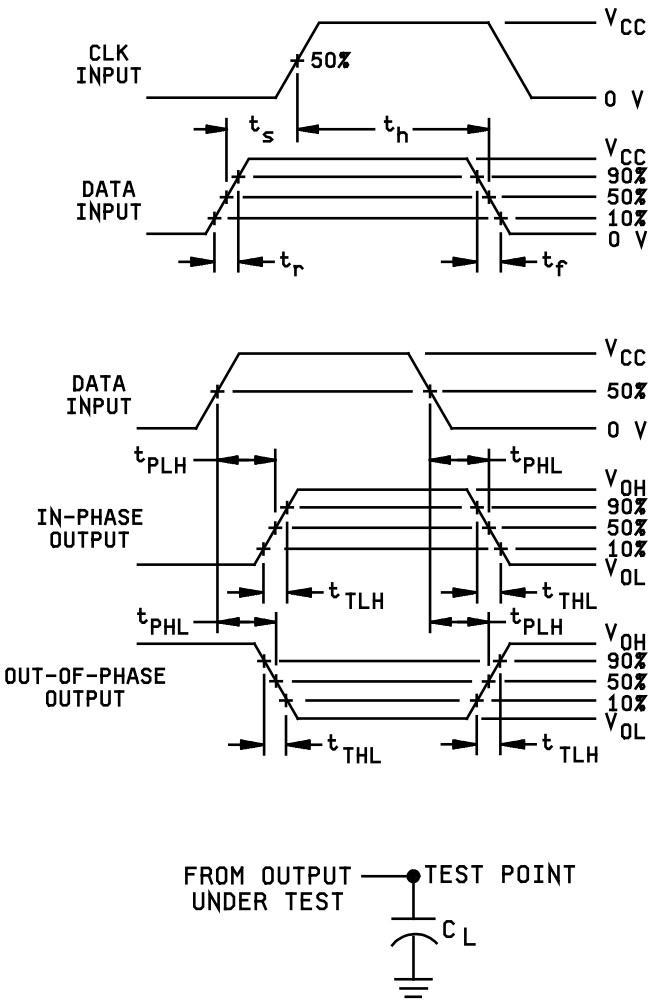


NOTES:

1. $C_L$ = 50 pF minimum or equivalent (includes probe and test fixture capacitance).
2. Phase relationships between waveforms were chosen arbitrarily. All input pulses are supplied by generators having the following characteristics: PRR ≤ 1 MHz, $Z_O$ = 50Ω, $t_r$ = 6.0 ns, $t_f$ = 6.0 ns.
3. The outputs are measured one at a time with one input transition per measurement.
4. Timing parameters shall be tested at a minimum input frequency of 1 MHz.

FIGURE 4. Switching waveforms and test circuit.

4. VERIFICATION

4.1 Sampling and inspection. For device classes Q and V, sampling and inspection procedures shall be in accordance with MIL-PRF-38535 or as modified in the device manufacturer's Quality Management (QM) plan. The modification in the QM plan shall not affect the form, fit, or function as described herein. For device class M, sampling and inspection procedures shall be in accordance with MIL-PRF-38535, appendix A.

4.2 Screening. For device classes Q and V, screening shall be in accordance with MIL-PRF-38535, and shall be conducted on all devices prior to qualification and technology conformance inspection. For device class M, screening shall be in accordance with method 5004 of MIL-STD-883, and shall be conducted on all devices prior to quality conformance inspection.

4.2.1 Additional criteria for device class M.

a. Burn-in test, method 1015 of MIL-STD-883.

(1) Test condition A, B, C, or D. The test circuit shall be maintained by the manufacturer under document revision level control and shall be made available to the preparing or acquiring activity upon request. The test circuit shall specify the inputs, outputs, biases, and power dissipation, as applicable, in accordance with the intent specified in method 1015.

(2) $T_A$ = +125°C, minimum.

b. Interim and final electrical test parameters shall be as specified in table II herein.

4.2.2 Additional criteria for device classes Q and V.

a. The burn-in test duration, test condition and test temperature, or approved alternatives shall be as specified in the device manufacturer's QM plan in accordance with MIL-PRF-38535. The burn-in test circuit shall be maintained under document revision level control of the device manufacturer's Technology Review Board (TRB) in accordance with MIL-PRF-38535 and shall be made available to the acquiring or preparing activity upon request. The test circuit shall specify the inputs, outputs, biases, and power dissipation, as applicable, in accordance with the intent specified in method 1015 of MIL-STD-883.

b. Interim and final electrical test parameters shall be as specified in table II herein.

c. Additional screening for device class V beyond the requirements of device class Q shall be as specified in MIL-PRF-38535, appendix B.

4.3 Qualification inspection for device classes Q and V. Qualification inspection for device classes Q and V shall be in accordance with MIL-PRF-38535. Inspections to be performed shall be those specified in MIL-PRF-38535 and herein for groups A, B, C, D, and E inspections (see 4.4.1 through 4.4.4).

4.4 Conformance inspection. Technology conformance inspection for classes Q and V shall be in accordance with MIL-PRF-38535 including groups A, B, C, D, and E inspections and as specified herein. Quality conformance inspection for device class M shall be in accordance with MIL-PRF-38535, appendix A and as specified herein. Inspections to be performed for device class M shall be those specified in method 5005 of MIL-STD-883 and herein for groups A, B, C, D, and E inspections (see 4.4.1 through 4.4.4).

4.4.1 Group A inspection

a. Tests shall be as specified in table II herein.

b. For device class M, subgroups 7 and 8 tests shall be sufficient to verify the truth table in figure 2 herein. The test vectors used to verify the truth table shall, at a minimum, test all functions of each input and output. All possible input to output logic patterns per function shall be guaranteed, if not tested, to the truth table in figure 2, herein. For device classes Q and V, subgroups 7 and 8 shall include verifying the functionality of the device.

c. $C_{IN}$ shall be measured only for initial qualification and after process or design changes which may affect capacitance. $C_{IN}$ shall be measured between the designated terminal and GND at a frequency of 1 MHz. $C_{PD}$ shall be tested in accordance with the latest revision of JEDEC Standard JESD7A and table I herein. For $C_{IN}$ and $C_{PD}$, test all applicable pins on five devices with zero failures.

TABLE II. Electrical test requirements.

| Test requirements | Subgroups (in accordance with MIL-STD-883, method 5005, table I) | Subgroups (in accordance with MIL-PRF-38535, table III) | |
|---|---|---|---|
| | Device class M | Device class Q | Device class V |
| Interim electrical parameters (see 4.2) | - - - | - - - | 1 |
| Final electrical parameters (see 4.2) | 1/ 1, 2, 3, 7, 9 | 1/ 1, 2, 3, 7, 9 | 2/ 3/ 1, 2, 3, 7, 8, 9, 10, 11 |
| Group A test requirements (see 4.4) | 1, 2, 3, 4, 7, 9, 10, 11 | 1, 2, 3, 4, 7, 8, 9, 10, 11 | 1, 2, 3, 4, 7, 8, 9, 10, 11 |
| Group C end-point electrical parameters (see 4.4) | 1, 2, 3 | 1, 2, 3 | 3/ 1, 2, 3, 7,8, 9, 10, 11 |
| Group D end-point electrical parameters (see 4.4) | 1, 2, 3 | 1, 2, 3 | 1, 2, 3 |
| Group E end-point electrical parameters (see 4.4) | 1, 7, 9 | 1, 7, 9 | 1, 7, 9 |

1/ PDA applies to subgroup 1.
2/ PDA applies to subgroups 1, 7 and deltas.
3/ Delta limits as specified in table III shall be required where specified, and the delta limits shall be completed with reference to the zero hour electrical parameters.

Table III. Burn-in operating life test delta parameters (+25°C)

| Parameter | Symbol | Delta Limits |
|---|---|---|
| Quiescent current | $I_{CC}$ | ±120 nA |
| Input current low level | $I_{IL}$ | ±20 nA |
| Input current high level | $I_{IH}$ | ±20 nA |
| Output voltage low level ($I_{OL}$ = 4 mA, $V_{CC}$ = 4.5 V) | $V_{OL}$ | ±0.026 V |
| Output voltage high level ($I_{OH}$ = -4 mA, $V_{CC}$ = 4.5 V) | $V_{OH}$ | ±0.20 V |

4.4.2 Group C inspection. The group C inspection end-point electrical parameters shall be as specified in table II herein.

4.4.2.1 Additional criteria for device class M. Steady-state life test conditions, method 1005 of MIL-STD-883:

a. Test condition A, B, C, or D. The test circuit shall be maintained by the manufacturer under document revision level control and shall be made available to the preparing or acquiring activity upon request. The test circuit shall specify the inputs, outputs, biases, and power dissipation, as applicable, in accordance with the intent specified in method 1005 of MIL-STD-883.

b. $T_A$ = +125°C, minimum.

c. Test duration: 1,000 hours, except as permitted by method 1005 of MIL-STD-883.

4.4.2.2 Additional criteria for device classes Q and V. The steady-state life test duration, test condition and test temperature, or approved alternatives shall be as specified in the device manufacturer's QM plan in accordance with MIL-PRF-38535. The test circuit shall be maintained under document revision level control by the device manufacturer's TRB in accordance with MIL-PRF-38535 and shall be made available to the acquiring or preparing activity upon request. The test circuit shall specify the inputs, outputs, biases, and power dissipation, as applicable, in accordance with the intent specified in method 1005 of MIL-STD-883.

4.4.3 Group D inspection. The group D inspection end-point electrical parameters shall be as specified in table II herein.

4.4.4 Group E inspection. Group E inspection is required only for parts intended to be marked as radiation hardness assured (see 3.5 herein).

a. End-point electrical parameters shall be as specified in table II herein.

b. For device classes Q and V, the devices or test vehicle shall be subjected to radiation hardness assured tests as specified in MIL-PRF-38535 for the RHA level being tested. For device class M, the devices shall be subjected to radiation hardness assured tests as specified in MIL-PRF-38535, appendix A for the RHA level being tested. All device classes must meet the postirradiation end-point electrical parameter limits as defined in table I at $T_A$ = +25°C ±5°C, after exposure, to the subgroups specified in table II herein.

c. When specified in the purchase order or contract, a copy of the RHA delta limits shall be supplied.

4.5 Methods of inspection. Methods of inspection shall be specified as follows:

4.5.1 Voltage and current. Unless otherwise specified, all voltages given are referenced to the microcircuit GND terminal. Currents given are conventional current and positive when flowing into the referenced terminal.

5. PACKAGING

5.1 Packaging requirements. The requirements for packaging shall be in accordance with MIL-PRF-38535 for device classes Q and V or MIL-PRF-38535, appendix A for device class M.

6. NOTES

6.1 Intended use. Microcircuits conforming to this drawing are intended for use for Government microcircuit applications (original equipment), design applications, and logistics purposes.

6.1.1 Replaceability. Microcircuits covered by this drawing will replace the same generic device covered by a contractor- prepared specification or drawing.

6.1.2 Substitutability. Device class Q devices will replace device class M devices.

6.2 Configuration control of SMD's. All proposed changes to existing SMD's will be coordinated with the users of record for the individual documents. This coordination will be accomplished using DD Form 1692, Engineering Change Proposal.

6.3 Record of users. Military and industrial users should inform DLA Land and Maritime when a system application requires configuration control and which SMD's are applicable to that system. DLA Land and Maritime will maintain a record of users and this list will be used for coordination and distribution of changes to the drawings. Users of drawings covering microelectronic devices (FSC 5962) should contact DLA Land and Maritime-VA, telephone (614) 692-8108.

6.4 Comments. Comments on this drawing should be directed to DLA Land and Maritime-VA , Columbus, Ohio 43218-3990, or telephone (614) 692-0547.

6.5 Abbreviations, symbols, and definitions. The abbreviations, symbols, and definitions used herein are defined in MIL-PRF-38535 and MIL-HDBK-1331.

6.6 Sources of supply.

6.6.1 Sources of supply for device classes Q and V. Sources of supply for device classes Q and V are listed in QML-38535. The vendors listed in QML-38535 have submitted a certificate of compliance (see 3.6 herein) to DLA Land and Maritime-VA and have agreed to this drawing.

6.6.2 Approved sources of supply for device class M. Approved sources of supply for class M are listed in MIL-HDBK-103. The vendors listed in MIL-HDBK-103 have agreed to this drawing and a certificate of compliance (see 3.6 herein) has been submitted to and accepted by DLA Land and Maritime-VA.

STANDARD MICROCIRCUIT DRAWING SOURCE APPROVAL BULLETIN

DATE: 16-01-27

Approved sources of supply for SMD 84089 are listed below for immediate acquisition information only and shall be added to MIL-HDBK-103 and QML-38535 during the next revision. MIL-HDBK-103 and QML-38535 will be revised to include the addition or deletion of sources. The vendors listed below have agreed to this drawing and a certificate of compliance has been submitted to and accepted by DLA Land and Maritime-VA. This information bulletin is superseded by the next dated revision of MIL-HDBK-103 and QML-38535. DLA Land and Maritime maintains an online database of all current sources of supply at http://www.landandmaritime.dla.mil/Programs/Smcr/

| Standard microcircuit drawing PIN 1/ | Vendor CAGE number | Vendor similar PIN 2/ |
|---|---|---|
| 8408901EA | 01295 | SNJ54HC175J |
| | | CD54HC175F3A |
| 8408901FA | 01295 | SNJ54HC175W |
| 84089012A | 01295 | SNJ54HC175FK |
| 8408901XA | 3/ | 54HC175 |
| 5962-8408901VXA | 3/ | 54HC175 |

1/ The lead finish shown for each PIN representing a hermetic package is the most readily available from the manufacturer listed for that part. If the desired lead finish is not listed contact the Vendor to determine its availability.

2/ Caution. Do not use this number for item acquisition. Items acquired to this number may not satisfy the performance requirements of this drawing.

3/ Not available from an approved source of supply.

| Vendor CAGE number | Vendor name and address |
|---|---|
| 01295 | Texas Instruments Incorporated<br>Semiconductor Group<br>8509 Forest Ln.<br>P.O. Box 660199<br>Dallas, TX 75243 |

The information contained herein is disseminated for convenience only and the Government assumes no liability whatsoever for any inaccuracies in the information bulletin.