REVISIONS			
LTR	DESCRIPTION	DATE (YR-MO-DA)	APPROVED
A	Figure 2 and Table III, changed pin 7 from NC "no connection" to "CASE_GND" and added a note regarding pin 7 should be grounded. -sld	11-09-01	Charles F. Saffle
B	Table I; Added the test "Source current off 1-5", changed the max limit for the test Comparator Reference In Current from "1000 nA" to "1200 nA", changed the condition "I_{sink}" to 2.0 mA for the test Output Voltage Low 1-5. Changed the min and max limits for the test BG Regulator Output Voltage for subgroups 2 and 3 from "1.990 and 2.010" to "1.980 and 2.020", removed the BG Regulator Maximum Source Current test and renamed the BG Regulator Maximum Sink Current to BG Regulator Load Regulation with the conditions I_{BG} = 0 to 2 mA and the min and max limit of -5 and +5 mV. Changed "C1" in the conditions block from "28 pF" to "37 pF" for the tests Comparator Pulse Delay Low to High and Comparator Pulse Delay High to Low. Changed the max limit for the Comparator Pulse Delay High to Low test from "120 ns" to "150 ns". Changed the max limit for the Comparator Pulse Delay Low to High test to "10 µs". Changed the min limit for the Enable Delay to V_{OUT} (t_{EDVHL}) from "1000 ns" to "500 ns". -sld	12-04-30	Charles F. Saffle
C	Added radiation hardness assurance requirements. Table I: Corrected the min and max limits for the test I_O from "78 and 82 µA" to "77 and 83 µA". Table I: Added footnote 2 to the Enable Input Voltage Low, Enable Input Voltage High and Input Zener Clamp Voltage tests. -sld	14-10-20	Charles F. Saffle

REV																				
SHEET																				
REV																				
SHEET																				

REV STATUS	REV	C	C	C	C	C	C	C	C	C	C	C	C	C	
OF SHEETS	SHEET	1	2	3	4	5	6	7	8	9	10	11	11	12	13

PMIC N/A	PREPARED BY Steve L. Duncan	**DLA LAND AND MARITIME** **COLUMBUS, OHIO 43218-3990** http://www.landandmaritime.dla.mil/
STANDARD MICROCIRCUIT DRAWING THIS DRAWING IS AVAILABLE FOR USE BY ALL DEPARTMENTS AND AGENCIES OF THE DEPARTMENT OF DEFENSE AMSC N/A	CHECKED BY Greg Cecil APPROVED BY Charles F. Saffle DRAWING APPROVAL DATE 11-04-04	**MICROCIRCUIT, HYBRID, PRECISION CURRENT SOURCE, QUINTET**
	REVISION LEVEL **C**	SIZE A / CAGE CODE **67268** / **5962-09234**
		SHEET 1 OF 13

1. SCOPE

1.1 Scope. This drawing documents five product assurance classes as defined in paragraph 1.2.3 and MIL-PRF-38534. A choice of case outlines and lead finishes which are available and are reflected in the Part or Identifying Number (PIN). When available, a choice of radiation hardness assurance levels are reflected in the PIN.

1.2 PIN. The PIN shall be as shown in the following example:

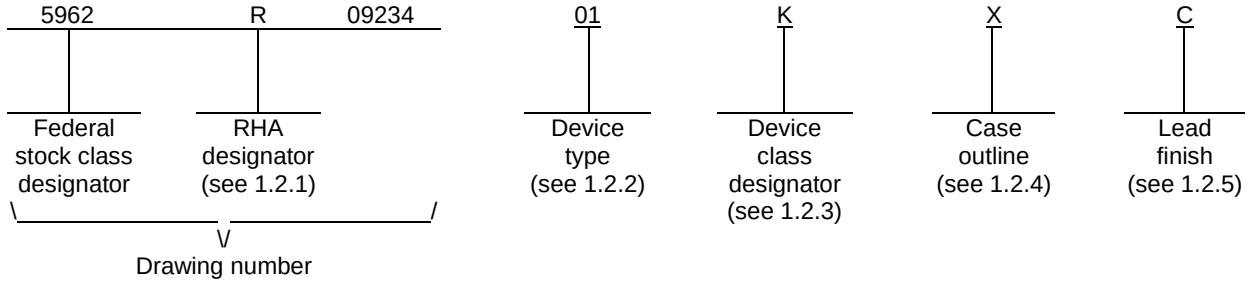

1.2.1 Radiation hardness assurance (RHA) designator. RHA marked devices shall meet the MIL-PRF-38534 specified RHA levels and shall be marked with the appropriate RHA designator. A dash (-) indicates a non-RHA device.

1.2.2 Device type(s). The device type(s) identify the circuit function as follows:

Device type	Generic number	Circuit function
01	PCS5035	Precision Current Source, Quintet

1.2.3 Device class designator. This device class designator shall be a single letter identifying the product assurance level. All levels are defined by the requirements of MIL-PRF-38534 and require QML Certification as well as qualification (Class H, K, and E) or QML Listing (Class G and D). The product assurance levels are as follows:

Device class	Device performance documentation
K	Highest reliability class available. This level is intended for use in space applications.
H	Standard military quality class level. This level is intended for use in applications where non-space high reliability devices are required.
G	Reduced testing version of the standard military quality class. This level uses the Class H screening and In-Process Inspections with a possible limited temperature range, manufacturer specified incoming flow, and the manufacturer guarantees (but may not test) periodic and conformance inspections (Group A, B, C and D).
E	Designates devices which are based upon one of the other classes (K, H, or G) with exception(s) taken to the requirements of that class. These exception(s) must be specified in the device acquisition document; therefore the acquisition document should be reviewed to ensure that the exception(s) taken will not adversely affect system performance.
D	Manufacturer specified quality class. Quality level is defined by the manufacturers internal, QML certified flow. This product may have a limited temperature range.

1.2.4 Case outline(s). The case outline(s) are as designated in MIL-STD-1835 and as follows:

Outline letter	Descriptive designator	Terminals	Package style
X	See figure 1	18	Flat package

1.2.5 Lead finish. The lead finish shall be as specified in MIL-PRF-38534.

1.3 Absolute maximum ratings. 1/

Supply voltage (V_{CC})	+7.0 V dc
Comparator input voltage range	-0.5 V dc to +3.1 V dc
Junction temperature (T_J)	+150°C
Power dissipation (P_D)	0.1 W
Thermal resistance, junction-to-case (θ_{JC})	6°C/W
Lead temperature (soldering, 10 seconds)	+300°C
Storage temperature	-65°C to +150°C

1.4 Recommended operating conditions.

Supply voltage (V_{CC})	+4.75 V dc to +5.25 V dc
Case operating temperature range (T_C)	-55°C to +125°C

1.5 Radiation features. 2/ 3/

Maximum total dose available (Dose rate = 50 - 300 rad(Si)/s)	100 krad(Si) 4/

2. APPLICABLE DOCUMENTS

2.1 Government specification, standards, and handbooks. The following specification, standards, and handbooks form a part of this drawing to the extent specified herein. Unless otherwise specified, the issues of these documents are those cited in the solicitation or contract.

DEPARTMENT OF DEFENSE SPECIFICATIONS

MIL-PRF-38534 - Hybrid Microcircuits, General Specification for.

DEPARTMENT OF DEFENSE STANDARDS

MIL-STD-883 - Test Method Standard Microcircuits.
MIL-STD-1835 - Interface Standard for Electronic Component Case Outlines.

DEPARTMENT OF DEFENSE HANDBOOKS

MIL-HDBK-103 - List of Standard Microcircuit Drawings.
MIL-HDBK-780 - Standard Microcircuit Drawings.

1/ Stresses above the absolute maximum ratings may cause permanent damage to the device. Extended operation at the maximum levels may degrade performance and affect reliability.
2/ See section 4.3.5 for the manufacturer's radiation hardness assurance analysis and testing.
3/ Bipolar device types may degrade from displacement damage from radiation which could affect RHA levels. These device types have not been characterized for displacement damage.
4/ The active elements that make up this device has been tested for Total Ionizing Dose (TID) in accordance with MIL-STD-883 test method 1019 condition A.

(Copies of these documents are available online at http://quicksearch.dla.mil/ or from the Standardization Document Order Desk, 700 Robbins Avenue, Building 4D, Philadelphia, PA 19111-5094.)

2.2 Order of precedence. In the event of a conflict between the text of this drawing and the references cited herein, the text of this drawing takes precedence. Nothing in this document, however, supersedes applicable laws and regulations unless a specific exemption has been obtained.

3. REQUIREMENTS

3.1 Item requirements. The individual item performance requirements for device classes D, E, G, H, and K shall be in accordance with MIL-PRF-38534. Compliance with MIL-PRF-38534 shall include the performance of all tests herein or as designated in the device manufacturer's Quality Management (QM) plan or as designated for the applicable device class. The manufacturer may eliminate, modify or optimize the tests and inspections herein, however the performance requirements as defined in MIL-PRF-38534 shall be met for the applicable device class. In addition, the modification in the QM plan shall not affect the form, fit, or function of the device for the applicable device class.

3.2 Design, construction, and physical dimensions. The design, construction, and physical dimensions shall be as specified in MIL-PRF-38534 and herein.

3.2.1 Case outline(s). The case outline(s) shall be in accordance with 1.2.4 herein and figure 1.

3.2.2 Terminal connections. The terminal connections shall be as specified on figure 2.

3.2.3 Schematic diagram(s). The schematic diagram(s) shall be as specified on figure 3.

3.2.4 Timing diagram(s) . The timing diagram(s) shall be as specified on figure 4.

3.2.5 Radiation exposure circuit. The radiation exposure circuit shall be maintained by the manufacturer under document revision level control and shall be made available to the preparing and acquiring activity upon request.

3.3 Electrical performance characteristics. Unless otherwise specified herein, the electrical performance characteristics are as specified in table I and shall apply over the full specified operating temperature range.

3.4 Electrical test requirements. The electrical test requirements shall be the subgroups specified in table II. The electrical tests for each subgroup are defined in table I.

3.5 Marking of device(s). Marking of device(s) shall be in accordance with MIL-PRF-38534. The device shall be marked with the PIN listed in 1.2 herein. In addition, the manufacturer's vendor similar PIN may also be marked.

3.6 Data. In addition to the general performance requirements of MIL-PRF-38534, the manufacturer of the device described herein shall maintain the electrical test data (variables format) from the initial quality conformance inspection group A lot sample, for each device type listed herein. Also, the data should include a summary of all parameters manually tested, and for those which, if any, are guaranteed. This data shall be maintained under document revision level control by the manufacturer and be made available to the preparing activity (DLA Land and Maritime -VA) upon request.

3.7 Certificate of compliance. A certificate of compliance shall be required from a manufacturer in order to supply to this drawing. The certificate of compliance (original copy) submitted to DLA Land and Maritime -VA shall affirm that the manufacturer's product meets the performance requirements of MIL-PRF-38534 and herein.

3.8 Certificate of conformance. A certificate of conformance as required in MIL-PRF-38534 shall be provided with each lot of microcircuits delivered to this drawing.

4. VERIFICATION

4.1 Sampling and inspection. Sampling and inspection procedures shall be in accordance with MIL-PRF-38534 or as modified in the device manufacturer's Quality Management (QM) plan. The modification in the QM plan shall not affect the form, fit, or function as described herein.

TABLE I. Electrical performance characteristics.

Test	Symbol	Conditions $-55°C \le T_C \le +125°C$ V_{CC} = +5.0 V dc ± 5% unless otherwise specified	Group A subgroups	Device type	Limits		Unit
					Min	Max	
Source Current 1-5 1/	I_O	$0 \le V_{IN} \le 3.1$ V, $V_{EN} = V_{ENH}$	1,2,3	01	77	83	µA
Source current off 1-5	I_{OFF}	$0 \le V_{IN} \le 3.1$ V, $V_{EN} = V_{ENL}$	1,2,3	01		150	nA
Comparator In Voltage 2/	V_{IN}	I_{OUT} = 80 µA	1,2,3	01	0	3.1	V
Comparator Reference Voltage 2/	V_{REF}		1,2,3	01		3.1	V
Comparator Reference In currrent	I_{REF}		1,2,3	01		1200	nA
Enable Input Voltage Low 2/	V_{ENL}		1,2,3	01		0.8	V
Enable Input Voltage High 2/	V_{ENH}		1,2,3	01	2.4		V
Comparator Hysteresis 2/			1,2,3	01		30	mV
Output Voltage Low 1-5 1/	V_{OL}	$I_{SINK} \le 2.0$ mA	1,2,3	01		0.4	V
Output Voltage High 1-5 1/	V_{OH}		1,2,3	01	4.4		V
Input Zener Clamp Voltage 2/	V_Z		1,2,3	01	7.0	8.6	V
Input Open Circuit Voltage	V_{INOC}		1,2,3	01	4.0	4.6	V
BG Regulator Output Voltage	V_{BG}		1	01	1.990	2.010	V
			2,3		1.980	2.020	
BG Regulator Load Regulation	I_{BG}	I_{BG} = 0 to 2 mA	1,2,3	01	-5	+5	mV
Internal Output Pull-Up Resistor	R_{INT}		1,2,3	01	8	12	kΩ
Comparator Pulse Delay Low to High	t_{DLH}	C1 = 37 pF, $V_{EN} = V_{ENH}$, V_{REF} = 1 V, I_{SINK} = 0, See figure 4 3/	9,10,11	01	0.2	10	µs
Comparator Pulse Delay High to Low	t_{DHL}		9,10,11	01	80	150	ns
Enable Delay to V_{OUT}	t_{EDVLH}	C1 = 37 pF, V_{IN} = 2.0 V, V_{REF} = 1 V, I_{SINK} = 0, See figure 4 3/	9,10,11	01	100	1500	ns
	t_{EDVHL}				500	3000	
Enable Delay to I_{OUT}	t_{EDILH}	C1 = 68 pF, I_{SINK} = 0, See figure 4 3/	9,10,11	01	100	250	ns
	t_{EDIHL}				100	250	
Supply Current 1/							
Disabled	I_{CCD}		1,2,3	01		4.0	mA
Enabled	I_{CCE}					7.0	mA

1/ The active elments that make up this device has been tested to 200 krad(Si)) to assure RHA designator level "R" (100 krad(Si)) of Method 1019, condition A of MIL-STD-883 at +25°C for these parameters. The elements will be re-tested after design or process changes that can affect RHA response of these elements.
2/ Guaranteed by design, but not tested.
3/ Test fixture node capacitance plus 10 pF scope capacitance.

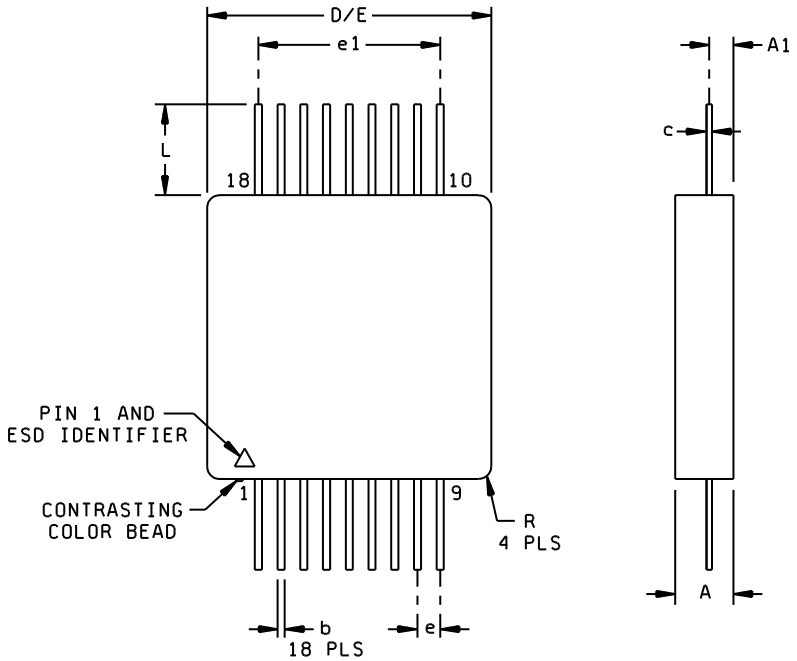

Symbol	Inches		Millimeters	
	Min	Max	Min	Max
A		.125		3.18
A1	.046	.056	1.17	1.42
b	.012	.018	.30	.46
c	.009	.011	.23	.28
D/E		.630		16.00
e	.050 BSC		1.27 BSC	
e1		.400		10.16
L	.200		5.08	
R	.015	.025	.38	.64

NOTES:

1. The U.S. preferred system of measurement is the metric SI. This item was designed using inch-pound units of measurement. In case of problems involving conflicts between the metric and inch-pound units, the inch-pound units shall rule.

FIGURE 1. Case outline.

Device type	01
Case outline	X
Terminal number	Terminal symbol
1	V_{CC}
2	I_{OUT}/V_{IN_1}
3	I_{OUT}/V_{IN_2}
4	I_{OUT}/V_{IN_3}
5	I_{OUT}/V_{IN_4}
6	I_{OUT}/V_{IN_5}
7	CASE_GND (see note)
8	ENABLE
9	GND
10	GND
11	BG REG OUT
12	COMPREF
13	V_{OUT_5}
14	V_{OUT_4}
15	V_{OUT_3}
16	V_{OUT_2}
17	V_{OUT_1}
18	V_{CC}

NOTE: CASE_GND (Pin 7) should be grounded to eliminate or minimize electrostatic discharge (ESD) or static buildup.

FIGURE 2. Terminal connections.

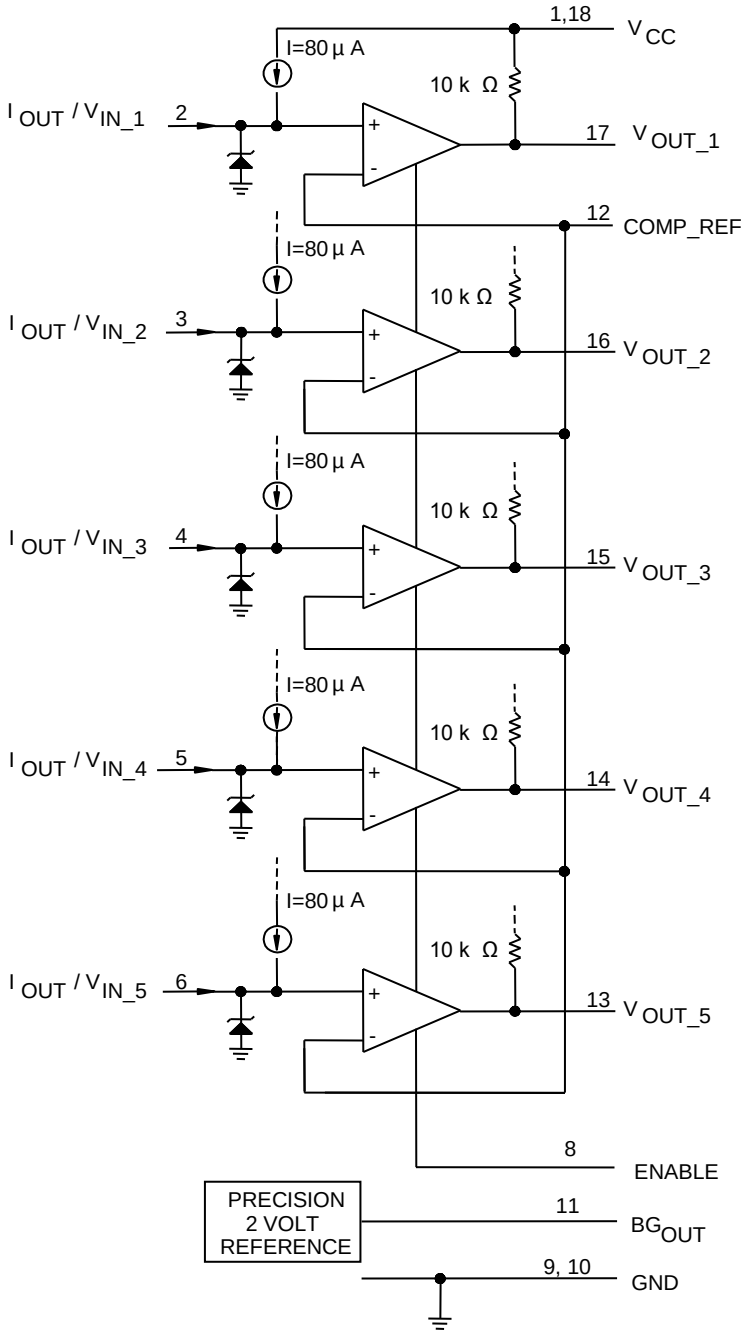

FIGURE 3. Schematic diagram.

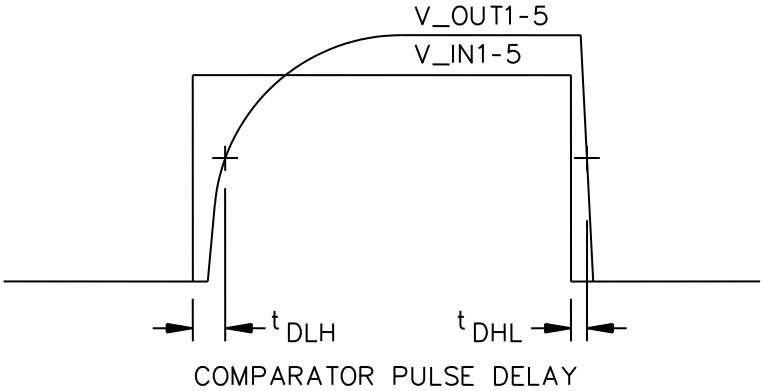

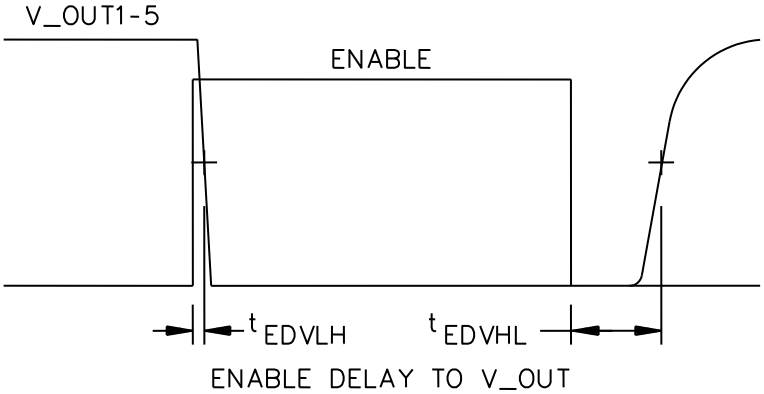

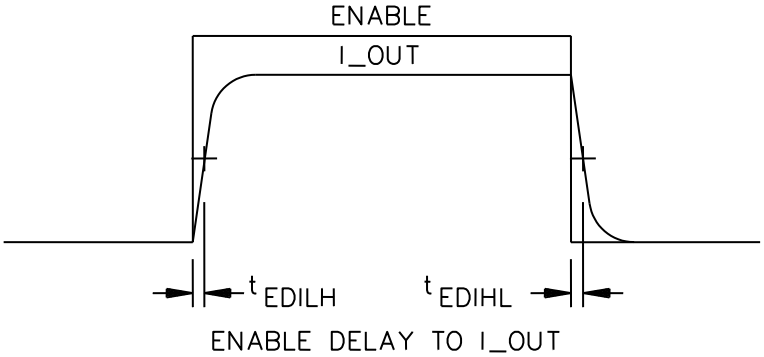

FIGURE 4. Timing diagrams.

TABLE II. Electrical test requirements.

MIL-PRF-38534 test requirements	Subgroups (in accordance with MIL-PRF-38534, group A test table)
Interim electrical parameters	1, 9
Final electrical parameters	1*, 2, 3, 9, 10, 11
Group A test requirements	1, 2, 3, 9, 10, 11
Group C end-point electrical parameters	1, 2, 3, 9, 10, 11
End-point electrical parameters for Radiation Hardness Assurance (RHA) devices	1

* PDA applies to subgroup 1

4.2 Screening. Screening shall be in accordance with MIL-PRF-38534. The following additional criteria shall apply:

a. Burn-in test, method 1015 of MIL-STD-883.

(1) Test condition A, B, C, or D. The test circuit shall be maintained by the manufacturer under document revision level control and shall be made available to either DLA Land and Maritime -VA or the acquiring activity upon request. Also, the test circuit shall specify the inputs, outputs, biases, and power dissipation, as applicable, in accordance with the intent specified in method 1015 of MIL-STD-883.

(2) T_A as specified in accordance with table I of method 1015 of MIL-STD-883.

b. Interim and final electrical test parameters shall be as specified in table II herein, except interim electrical parameter tests prior to burn-in are optional at the discretion of the manufacturer.

4.3 Conformance and periodic inspections. Conformance inspection (CI) and periodic inspection (PI) shall be in accordance with MIL-PRF-38534 and as specified herein.

4.3.1 Group A inspection (CI). Group A inspection shall be in accordance with MIL-PRF-38534 and as follows:

a. Tests shall be as specified in table II herein.

b. Subgroups 4, 5, 6, 7, and 8 shall be omitted.

4.3.2 Group B inspection (PI). Group B inspection shall be in accordance with MIL-PRF-38534.

4.3.3 Group C inspection (PI). Group C inspection shall be in accordance with MIL-PRF-38534 and as follows:

a. End-point electrical parameters shall be as specified in table II herein.

b. Steady-state life test, method 1005 of MIL-STD-883.

(1) Test condition A, B, C, or D. The test circuit shall be maintained by the manufacturer under document revision level control and shall be made available to either DLA Land and Maritime -VA or the acquiring activity upon request. Also, the test circuit shall specify the inputs, outputs, biases, and power dissipation, as applicable, in accordance with the intent specified in method 1005 of MIL-STD-883.

(2) T_A as specified in accordance with table I of method 1005 of MIL-STD-883.

(3) Test duration: 1,000 hours, except as permitted by method 1005 of MIL-STD-883.

4.3.4 Group D inspection (PI). Group D inspection shall be in accordance with MIL-PRF-38534.

4.3.5. Radiation hardness assurance (RHA). RHA qualification is required only for those devices with the RHA designator as specified herein. See table IIIA and table IIIB.

Table IIIA. Radiation Hardness Assurance Method Table.

RHA method Employed	**Total Dose Testing RHA level "R" (100 krad)**		**Worst Case Analysis Performed**				**End point electricals after total dose**	
	Element level	Hybrid device level	Includes temperature effects	Combines temperature and radiation effects	Combines total dose and displacement effects	End-of-life	Element level	Hybrid device level
	Tested at (200 krad)	Tested at (200 krad) See 4.3.5.1.1.2	No	No	No	No	T_C = +25°C	T_C = +25°C

Table IIIB. Hybrid level and element level test table.

	Radiation Test								
	Total Dose			**Heavy Ion**		**Proton**		**Neutron**	
	Low Dose Rate (LDR)	High Dose Rate (HDR)	ELDRS	SEU (upset)	SEL (latch-up)	Low Energy	High Energy	SEE (upset)	Displacement Damage (DD)
Hybrid	Not tested	Tested See 4.3.5.1.1.2	Not tested	Not tested	Not tested	Not tested	Not tested	Not tested	Not tested
Element									
Bipolar, linear or mixed signal > 90 nm	Not tested	Tested (200 krad)	Not tested	Not tested	Not tested	Not tested	Not tested	Not tested	Not tested

4.3.5.1 Radiation Hardness Assurance (RHA) inspection. RHA qualification is required for those devices with the RHA designator as specified herein. End-point electrical parameters for radiation hardness assurance (RHA) devices shall be specified in table II. Radiation testing will be in accordance with the qualifying activity (DLA Land and Maritime -VQ) approved plan and with MIL-PRF-38534, Appendix G.

a. The hybrid device manufacturer shall establish procedures controlling component radiation testing, and shall establish radiation test plans used to implement component lot qualification during procurement. Test plans and test reports shall be filed and controlled in accordance with the manufacturer's configuration management system.

b. The hybrid device manufacturer shall designate a RHA program manager to oversee component lot qualification, and to monitor design changes for continued compliance to RHA requirements.

4.3.5.1.1 Hybrid level qualification.

4.3.5.1.1.1 Qualification by similarity. This device has not been indentified as "similar".

4.3.5.1.1.2 Total ionizing dose irradiation testing. Hybrid level and element level testing are the same for the devices on this SMD since the active elements are independent of each other and accessible to the device leads for test. The qualification was performed on the active elements, independent of the hybrid.

4.3.5.1.2 Element level qualification.

4.3.5.1.2.1 Total Ionizing dose irradiation testing. A minimum of ten samples of each element is tested at initial qualification and after any design or process changes which may affect the RHA response of the device type. Five biased and five unbiased are tested at High Dose Rate (HDR) in accordance with condition A of method 1019 of MIL-STD-883 to 200 krad(Si). 0.9000/90% statistics are applied to the device parameters as specifed in table I herein.

4.3.5.2 Radiation Lot Acceptance. Each wafer lot of active elements shall be evaluated for acceptance in accordance with MIL-PRF-38534 and herein.

4.3.5.2.1 Total Ionizing Dose. Samples from every wafer lot will be assembled into the package herein and tested for wafer lot acceptance Radiation Lot Acceptance Testing (RLAT).. Five biased and five unbiased devices are tested in accordance with condition A, of method 1019 of MIL-STD-883 to 200 krad(Si). 0.9000/90% statistics are applied to the device parameters as specifed in table I herein.

4.3.5.2.2 Technologies not tested. All active components in these devices are RHA tested.

5. PACKAGING

5.1 Packaging requirements. The requirements for packaging shall be in accordance with MIL-PRF-38534.

6. NOTES

6.1 Intended use. Microcircuits conforming to this drawing are intended for use for Government microcircuit applications (original equipment), design applications, and logistics purposes.

6.2 Replaceability. Microcircuits covered by this drawing will replace the same generic device covered by a contractor-prepared specification or drawing.

6.3 Configuration control of SMD's. All proposed changes to existing SMD's will be coordinated as specified in MIL-PRF-38534.

6.4 Record of users. Military and industrial users shall inform DLA Land and Maritime when a system application requires configuration control and the applicable SMD. DLA Land and Maritime will maintain a record of users and this list will be used for coordination and distribution of changes to the drawings. Users of drawings covering microelectronic devices (FSC 5962) should contact DLA Land and Maritime-VA, telephone (614) 692-8108.

6.5 Comments. Comments on this drawing should be directed to DLA Land and Maritime-VA, Columbus, Ohio 43218-3990, or telephone (614) 692-1081.

6.6 Sources of supply. Sources of supply are listed in MIL-HDBK-103 and QML-38534. The vendors listed in MIL-HDBK-103 and QML-38534 have submitted a certificate of compliance (see 3.7 herein) to DLA Land and Maritime-VA and have agreed to this drawing.

6.7 Pin functions table. The pin functions are as specified in table IV herein.

Table IV. Pin functions.

Pin number	Signal name	Description
1, 18	V_{CC}	+5 Vdc ±5%
2-6	I_{OUT}/V_{IN_1}- I_{OUT}/V_{IN_5}	Current Source Outputs/Comparator Inputs 1 through 5.
8	ENABLE	Turns all Current/Comparators "ON" or "OFF".
9, 10	GND	Logic and power return.
13-17	V_{OUT_5}-V_{OUT_1}	Voltage outputs corresponding to Current source outputs 1 through 5, includes 10 K pull-ups.
11	BG Reg out	Band gap regulator precision output 2.0 Vdc.
7	CASE_GND	Connected to metal package. (see note)
12	COMPREF	External voltage to all 5 comparator inputs.

NOTE: CASE_GND (Pin 7) should be grounded to eliminate or minimize electrostatic discharge (ESD) or static buildup.

STANDARD MICROCIRCUIT DRAWING BULLETIN

DATE: 14-10-20

Approved sources of supply for SMD 5962-09234 are listed below for immediate acquisition information only and shall be added to MIL-HDBK-103 and QML-38534 during the next revisions. MIL-HDBK-103 and QML-38534 will be revised to include the addition or deletion of sources. The vendors listed below have agreed to this drawing and a certificate of compliance has been submitted to and accepted by DLA Land and Maritime-VA. This information bulletin is superseded by the next dated revisions of MIL-HDBK-103 and QML-38534. DLA Land and Maritime maintains an online database of all current sources of supply at http://www.landandmaritime.dla.mil/Programs/Smcr/.

Standard microcircuit drawing PIN 1/	Vendor CAGE number	Vendor similar PIN 2/
5962-0923401KXA 5962R0923401KXA	88379 88379	PCS5035-201-2S PCS5035-901-2S
5962-0923401KXC 5962R0923401KXC	88379 88379	PCS5035-201-1S PCS5035-901-1S

1/ The lead finish shown for each PIN representing a hermetic package is the most readily available from the manufacturer listed for that part. If the desired lead finish is not listed contact the Vendor to determine its availability.

2/ Caution. Do not use this number for item acquisition. Items acquired to this number may not satisfy the performance requirements of this drawing.

Vendor CAGE number	Vendor name and address
88379	Aeroflex Plainview Incorporated, (Aeroflex Microelectronic Solutions) 35 South Service Road Plainview, NY 11803

The information contained herein is disseminated for convenience only and the Government assumes no liability whatsoever for any inaccuracies in the information bulletin.