REVISIONS

LTR	DESCRIPTION	DATE	APPROVED
A	Add new source of supply. Editorial corrections throughout.	15 Dec 1994	Edward H. Back
B	Add new source of supply. Editorial corrections throughout.	31 Jan 1997	David E. Moore
C	Extend maximum qualified resistance for present source of supply. Update to present DoD policy requirements.	25 Feb 1998	David E. Moore
D	Five year document review. Update to present DoD policy requirements.	22 Jan 2004	Kendall A. Cottongim
E	Add requirements for space level and update to present DoD policy requirements.	31 Jan 2006	Michael A. Radecki
F	Paragraph 4.3.3; change HTE from 1000 hours to 100 hours. Add pure tin prohibition. Editorial corrections throughout.	14 Apr 2006	Michael A. Radecki
G	Extend vendors resistance range and tolerances. Add pulse application paragraph. Editorial corrections throughout.	14 Oct 2011	Michael A. Radecki
H	Correct paragraph 4.4 example 2 critical resistance value sign to "≥". Editorial change throughout.	24 Feb 2013	Michael A. Radecki
J	Add vendor to space level PIN and QR code. Editorial changes throughout.	17 APR 2015	Michael A. Radecki

CURRENT DESIGN ACTIVITY CAGE CODE 037Z3
HAS CHANGED NAMES TO:
DLA LAND AND MARITIME
COLUMBUS, OHIO 43218-3990

Prepared in accordance with ASME Y14.100

REV STATUS OF PAGES																		
	REV	J	J	J	J	J	J	J	J	J								
	PAGES	1	2	3	4	5	6	7	8	9								

PMIC N/A	**PREPARED BY** Dennis L. Cross	**DEFENSE ELECTRONIC SUPPLY CENTER** **DAYTON, OH**
Original date of drawing 7 September 1994	**CHECKED BY** Andrew R. Ernst	**TITLE** RESISTOR, CHIP, FIXED, FILM, MOISTURE RESISTANT, MILITARY and SPACE LEVEL, STYLE 2208
	APPROVED BY David E. Moore	
	SIZE A / **CODE IDENT. NO.** 14933	**DWG NO.** 94014
	REV J	**PAGE** 1 **OF** 9

1. SCOPE

1.1 Scope. This drawing describes the requirements for a 0.225 by 0.075 chip resistor, which is resistant to the degrading effects of moisture while under power.

1.2 Part or Identifying Numbers (PIN's). The complete PIN's are shown in the examples below. The first example is for general military applications. (NOTE: This PIN is the original PIN shown in previous revisions of this drawing). The second example is for space type applications and requires adding a code letter to the end of the original PIN.

NOTE: Example of military level PIN.

94014-	*	****	*	*
Drawing number	Characteristic (see 3.3.1)	Resistance (see 3.3.2)	Tolerance (see 3.3.3)	Termination material (see 3.3.4)

NOTE: Example of space level PIN codes A & T.

94014-	*	****	*	*	*
Drawing number	Characteristic (see 3.3.1)	Resistance (see 3.3.2)	Tolerance (see 3.3.3)	Termination material (see 3.3.4)	Space levels (see 3.3.5)

2. APPLICABLE DOCUMENTS

2.1 Government documents.

2.1.1 Specifications and standards. The following specifications and standards form a part of this document to the extent specified herein. Unless otherwise specified, the issues of these documents are those cited in the solicitation or contract.

DEPARTMENT OF DEFENSE SPECIFICATIONS

MIL-PRF-55342 - Resistor, Chip, Fixed, Film, Nonestablished Reliability, Established Reliability, Space Level, General Specification for.
MIL-PRF-55342/5 - Resistor, Chip, Fixed, Film, Nonestablished Reliability, Established Reliability, Space Level, Style 2208.

DEPARTMENT OF DEFENSE STANDARDS

MIL-STD-690 - Failure Rate Sampling Plans and Procedures.
MIL-STD-790 - Standard Practice for Established Reliability and High Reliability QPL Systems.

* (Copies of these documents are available online at http://quicksearch.dla.mil.)

2.2 Order of precedence. Unless otherwise noted herein or in the contract, in the event of a conflict between the text of this document and the references cited herein (except for related specification sheets), the text of this document takes precedence. Nothing in this document, however, supersedes applicable laws and regulations unless a specific exemption has been obtained.

3. REQUIREMENTS

3.1 Item requirements. The individual item requirements shall be in accordance with MIL-PRF-55342, and as specified herein.

3.2 Interface and physical dimensions. The resistor shall meet the interface and physical dimensions as specified in MIL-PRF-55342 and herein (see figure 1).

3.2.1 Design documentation. The design documentation shall be in accordance with MIL-PRF-55342 and unless otherwise specified in the contract or purchase order, shall be retained by the manufacturer and available for review by the acquiring activity or contractor upon request.

3.3 Electrical characteristics.

3.3.1 Resistance temperature characteristic. The resistance temperature characteristic shall be identified by a single letter as specified in MIL-PRF-55342 and herein (see 6.7).

3.3.2 Resistance. The nominal resistance expressed in ohms is identified by four digits; the first three digits represent significant figures and the last digit specifies the number of zeros to follow. When the value of resistance is less than 100 ohms, or when fractional values of an ohm are required, the letter "R" shall be substituted for one of the significant figures. The resistance value designations are shown in table I. Minimum and maximum resistance values shall be as specified in MIL-PRF-55342. Resistance values not listed in the "10 to 100" decade table of MIL-PRF-55342 for the appropriate resistance tolerance shall be considered as not conforming to the specification.

TABLE I. Resistance value designations.

Designation	Resistance ohms			
1R00 to 9R88 incl.	1.00	to	9.88	incl.
10R0 to 98R8 incl.	10.0	to	98.8	incl.
1000 to 9880 incl.	100.0	to	988.0	incl.
1001 to 9881 incl.	1,000.0	to	9,880.0	incl.
1002 to 9882 incl.	10,000.0	to	98,800.0	incl.
1003 to 9883 incl.	100,000.0	to	988,000.0	incl.
1004 to 9884 incl.	1,000,000.0	to	9,880,000.0	incl.
1005 to 2205 incl.	10,000,000.0	to	22,000,000.0	incl.

3.3.2.1 Resistance range. The resistance range shall be as specified in MIL-PRF-55342/5 and herein (see 6.7).

3.3.3 Resistance tolerance. Resistors are available in resistance tolerances as specified in table II and herein (see 6.7).

3.3.4 Termination material. Termination material shall be identified by a single letter as specified in MIL-PRF-55342 and herein (see 6.7).

TABLE II. Resistance tolerance.

Symbol	Resistance tolerance percent
B	±0.1
F	±1.0
G	±2.0
J	±5.0
K	±10.0

3.3.4.1 Pure tin. The use of pure tin, as an underplate or final finish is prohibited both internally and externally. Tin content of resistor components and solder shall not exceed 97 percent, by mass. Tin shall be alloyed with a minimum of 3 percent lead, by mass (see 6.3).

3.3.5 Product level testing. The product level testing shall be designated by the military and space level PIN's (see 1.2, 4.3.2, and 4.3.3).

3.3.6 Power rating. The power rating for this chip resistor shall be as specified in MIL-PRF-55342/5.

3.3.7 Voltage rating. The maximum continuous working voltage shall be as specified in MIL-PRF-55342/5.

3.3.8 Power moisture resistance. When resistors are tested as specified in 4.4, there shall be no evidence of mechanical damage; the change in resistance between the initial and final measurements shall not exceed the limits as specified in the moisture resistant requirements of MIL-PRF-55342. Samples subjected to this test shall not be delivered on the contract or order.

3.3.9 Outgassing (space levels A and T). Outgassing shall be performed as specified in MIL-PRF-55342.

3.4 Marking. Marking is not required on the resistor; however, each unit package shall be marked with the PIN assigned herein (see 1.2), vendor CAGE code, and date and lot codes.

3.5 Manufacturers' eligibility (military applications). The approved sources of supply listed on this drawing shall be qualified to at least one product on the Qualified Products List for MIL-PRF-55342. They shall have successfully passed the power moisture resistance test as witnessed and certified by an official company representative with 30 samples (10 low, 10 critical, 10 high) with zero defects. If the manufacturer has already performed the power moisture resistance test to any of the following drawings (94012, 94013, 94015, 94016, 94017, 94018, 94019, 94025, 94026, 04007, 04008, 04009 or 07010) then performance of the power moisture resistance test as a prerequisite for being a source of supply is not required.

3.5.1 Manufacturers eligibility (space levels A and T). Only approved sources of supply qualified to "T" failure rate level of MIL-PRF-55342 and approved to the general military level of this drawing may supply to space level codes A and T. Furthermore all testing for these levels shall be done on a production lot basis as defined in MIL-PRF-55342. Test deletion or reduction, which may be granted for ER level product, is not allowed for space level codes A and T of this document.

Configuration A

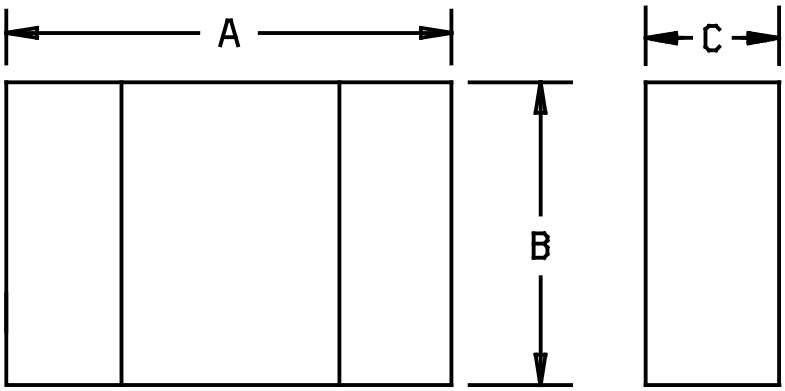

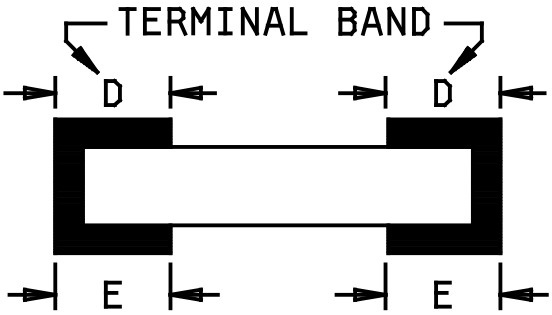

mm	Inches
0.13	.005
0.18	.007
0.30	.012
0.38	.015
0.51	.020
0.76	.030
0.84	.033
1.91	.075
5.72	.225
5.84	.230

Configuration B

Configuration	Dimension A mm	Dimension B mm	Dimension C mm	Dimension D mm	Dimension E mm
A	5.72 ±0.13	1.91 ±0.13	0.30/0.76	0.38 ±0.13	N/A
B	5.84 ±0.18	1.91 ±0.13	0.38/0.84	0.51 ±0.13	0.51 ±0.13

NOTES:
1. Dimensions are in millimeters.
2. Inch equivalents are given for general information only.
3. The pictorial view of the styles above are given as representative of the envelope of the item. Slight deviations from the outline shown, which are contained within the envelope, and do not alter the functional aspects of the device are acceptable.

FIGURE 1. Chip resistor.

* 3.6 Recycled, recovered, environmentally preferable or biobased materials. Recycled, recovered, environmentally preferable or biobased materials should be used to the maximum extent possible provided that the material meets or exceeds the operational and maintenance requirements and promotes economically advantageous life cycle costs.

3.7 Workmanship. Resistors shall be uniform in quality and free from any defects that will affect life, serviceability, or appearance.

4. VERIFICATION

4.1 Product assurance program. The product assurance program specified in MIL-PRF-55342 and maintained in accordance with MIL-STD-790 is not applicable to this document.

4.2 Product level qualification. The product level qualification specified in MIL-PRF-55342 and MIL-STD-690 is not applicable to this document.

4.3 Conformance inspection.

4.3.1 Inspection of product for delivery (military level). Inspection of product for delivery for each PIN ordered shall consist of group A inspection and group B inspection of MIL-PRF-55342, ER level. Additionally 5 samples of each PIN ordered shall be subjected to the power moisture resistance test specified herein with 0 defects allowed.

4.3.1.1 Certification (military level only). The procuring activity may accept a certificate of compliance in lieu of performing group B inspection and the power moisture resistance test (see 6.2d).

4.3.2 Inspection of product for delivery (space level code A). Inspection of product for delivery for each PIN ordered shall consist of group A inspection and group B inspection of MIL-PRF-55342, space level. Additionally 10 samples of each PIN ordered shall be subjected to the power moisture resistance test specified herein (see 4.4) with 0 defects allowed. The group C life test shall be performed as specified in MIL-PRF-55342 except the test shall be from each production lot for 1000 hours, 22 samples for each value ordered with 0 defects. NOTE: Test samples subjected to Group B, Group C, and the power moisture resistance test herein shall not be delivered on the contract or order.

4.3.3 Inspection of product for delivery (space level code T). Inspection of product for delivery for each PIN ordered (each production lot) shall consist of group A, group B, and group C inspection of MIL-PRF-55342, space level. Resistance to soldering heat and resistance to bonding exposure shall be as specified in MIL-PRF-55342 except 10 samples for each PIN ordered, followed by power moisture resistance as specified herein (see 4.4) performed on the same set of samples with 0 defects for the subgroup. The group C life test shall be performed as specified in MIL-PRF-55342 except the test shall be for 1000 hours, 22 samples for each value ordered with 0 defects. Thermal shock and low temperature operation shall be as specified in MIL-PRF-55342 except 10 samples for each PIN ordered with 0 defects. High temperature exposure shall be as specified in MIL-PRF-55342 except the test shall be for 100 hours, 10 samples with 0 defects. NOTE: Test samples subjected to Group B, Group C, and the power moisture resistance test herein shall not be delivered on the contract or order.

4.4 Power moisture resistance. Power moisture resistance test shall be performed as specified in MIL-PRF-55342 except the loading voltage shall be as follows:

Loading voltage: The loading voltage shall be equal to 10 percent rated power for resistance values less than or equal to the critical resistance value as shown in example number 1. For values greater than or equal to the critical resistance value the loading voltage shall be as shown in example number 2.

EXAMPLE 1

Characteristic: "K"
Rated wattage: .225 watts (P)
Value: 2000 ohms (R)

$V = \sqrt{.1PR}$ (for "R" ≤ critical res.)
$= \sqrt{.1(.225)(2000)}$
$= \sqrt{45}$
= 6.71 volts

EXAMPLE 2

Characteristic: "K"
Voltage rating: 40 volts (V)

$V = \sqrt{.1}$ x V (for "R" ≥ critical res.)
= .316 x 40
= 12.64 volts

4.5 Visual and mechanical examination. Resistors shall be examined to verify that the materials, design, construction, physical dimensions, marking, and workmanship are in accordance with the applicable requirements of MIL-PRF-55342.

4.6 Data retention (codes A & T). Data retention for space level products shall be per the requirements of MIL-PRF-55342.

5. PACKAGING

5.1 Packaging. For acquisition purposes, the packaging requirements shall be as specified in the contract or order (see 6.2). When packaging of materiel is to be performed by DoD or in house contractor personnel, these personnel need to contact the responsible packaging activity to ascertain packaging requirements. Packaging requirements are maintained by the Inventory Control Point's packaging activities within the Military service or Defense Agency, or within the military service's system commands. Packaging data retrieval is available from the managing Military Department's or Defense Agency's automated packaging files, CD-ROM products, or by contacting the responsible packaging activity.

6. NOTES

(This section contains information of a general or explanatory nature that may be helpful, but is not mandatory.)

6.1 Intended use. Chip resistors are intended for use in thick or thin film circuits where microcircuitry is intended. Chip resistors can also be used in surface mount applications.

6.2 Ordering data. The contract or purchase order should specify the following:

a. Complete PIN (see 1.2).

b. Requirements for delivery: One copy of the conformance inspection variables and attributes data that parts have passed conformance inspection, with each shipment of parts by the manufacturer.

c. Packaging requirements (see 5.1).

d. Whether the manufacturer performs the group B inspection and the moisture resistance test or provides a certificate of compliance (see 4.3.2, military level only).

6.3 Tin whisker growth. The use of alloys with tin content greater than 97 percent, by mass, may exhibit tin whisker growth problems after manufacture. Tin whiskers may occur anytime from a day to years after manufacture and can develop under typical operating conditions, on products that use such materials. Conformal coatings applied over top of a whisker-prone surface will not prevent the formation of tin whiskers. Alloys of 3 percent lead, by mass, have shown to inhibit the growth of tin whiskers. For additional information on this matter, refer to ASTM-B545 (Standard Specification for Electrodeposited Coatings of Tin).

6.4 Electrostatic charge. Under several combinations of conditions, these resistors can be electrically damaged, by electrostatic charges, and drift from specified value. Users should consider this phenomena when ordering or shipping resistors. Direct shipment to the Government is controlled by MIL-DTL-39032, which specifies a preventive packaging procedure.

6.5 Pulse applications. Designers are CAUTIONED on using the above resistors in high power pulse applications. Since they have not been qualified nor tested for such applications, damage and premature failure are possible. These resistors only see a one time pulse (Short-time overload) as part of the group B inspection of MIL-PRF-55342.

6.6 User of record. Coordination of this document for future revisions is coordinated only with the approved source of supply and the users of record of this document. Requests to be added as a recorded user of this drawing may be achieved online at resistor@dla.mil or in writing to: DLA Land and Maritime-VAT, Post Office Box 3990, Columbus, OH 43218-3990 or by telephone (614) 692-0552 or DSN 850-0552.

* 6.7 Approved source of supply. Approved source of supply is listed herein. Additional sources will be added as they become available. Assistance in the use of this drawing may be obtained online at resistor@dla.mil or contact DLA Land and Maritime-VAT, Post Office Box 3990, Columbus, OH 43218-3990 or by telephone (614) 692-0552 or DSN 850-0552.

DLA Land and Maritime Drawing PIN's 94014-******* 94014-********	Vendor similar designation or type number 1/	Vendor CAGE	Vendor name and address
Char. E and H, res. Values 100 ohms thru 3.32 megohms, res. Tol. 0.1 pct., res. Values 5.62 ohms thru 3.32 megohms, res. Tol. 1.0 pct., res. Values 5.6 ohms thru 3.3 megohms, res. Tol. 2.0, 5.0, and 10 pct., term. B and W, all PIN's (see 1.2). Char. K and M, res. Values 100 ohms thru 3.32 megohms, res. Tol. 0.1 pct., term. B and W; res. Values 1.0 ohm thru 22.0 megohms, res. Tol. 1.0, 2.0, 5.0, and 10 pct., terms. B, C, G, U, and W, all PIN's (see 1.2).	H2208**********(DEC014)	56235	State of the Art, Inc. 2470 Fox Hill Rd. State College, PA 16803-1797
Char. M, res. values 1 ohm thru 5.6 ohms, res. tol. 2, 5, and 10 pct., term. B, all PIN's (see 1.2) Char. K and M, res. values 5.62 ohms thru 22 megohms, res. tol. 1, 2. 5, and 10 pct., term. B, all PIN's (see 1.2).	RCWP-7225-69 RCWP-7225-81 RCWP-7225-82	SH903	Vishay Dale Electronics PO Box 609 Columbus, NE 68602-0609 Plant: Vishay Israel, Ltd. Emek-Sara "B" Industrial Park Beer Sheva, Israel 84874
Char. E, H, K, & M; res. Values 10 ohms to 1.75 megohms, res. Tol. 0.1, 1.0, 2.0, 5.0 & 10.0 pct; term. B, all PIN's (see 1.2).	PTN2208	57489	VISHAY Thin Film 2160 Liberty Drive Niagara Falls, 14304-3676
Char. K and M, res. values 1 ohm thru 200 kohm, res. tol. 1 pct., terms. B, G, U, C, and W, all PIN's (see 1.2). Char. K and M, res. values 1 ohm thru 180 kohm, res. tol. 2, 5, and 10 pct., terms. B, G, U, C, and W, all PIN's (see 1.2).	WA85SM-*****-NS62C WA85SM-*****-NUC WA85PG-*****-UC WA85PS-*****-UC MSR85G-*****-UC	50316	Mini-System, Inc. Thick Film Division PO Box 69 20 David Road North Attleboro, MA 02761-0069

1/ Caution: Parts must be purchased to the DLA Land and Maritime PIN to assure that all performance requirements and tests are met.