REVISIONS

LT	DESCRIPTION	DATE	APPROVED
A	Revise section 4. Editorial changes throughout.	10 Ap 92	D. Moore
B	Changes in accordance with NOR 5905-R007-92.	12 May 93	D. Moore
C	Revise drawing.	29 Apr 98	D. Moore
D	Update and validation of drawing. Editorial changes throughout.	19 Nov 03	K. Cottongim
E	Add supersession data and tin prohibition paragraph. Editorial changes throughout.	9 Nov 05	W. Sindelar
F	Add manufacturer's eligibility, and pulse application paragraphs. Editorial changes throughout.	10 May 13	M. Radecki

CURRENT DESIGN ACTIVITY CAGE CODE 037Z3
HAS CHANGED NAMES TO:
DLA LAND AND MARITIME
COLUMBUS, OHIO 43218-3990

Prepared in accordance with ASME Y14.100

REV	F	F	F	F	F															
PAGE	16	17	18	19	20															
REV STATUS OF PAGES	**REV**					F	F	F	F	F	F	F	F	F	F	F	F	F	F	
	PAGES					1	2	3	4	5	6	7	8	9	10	11	12	13	14	15

PMIC N/A	**PREPARED BY** Allan Knox	**DESIGN ACTIVITY:** **DEFENSE ELECTRONIC SUPPLY CENTER** **DAYTON, OHIO 45444-5000**
Original date of drawing 29 September 89	**CHECKED BY** David E. Moore	**TITLE** **RESISTOR, FIXED, FILM, PRECISION, 0.1 WATT, POWER CURVE C**
	APPROVED BY David E. Moore	
	SIZE **A** / **CODE IDENT. NO.** **14933**	**DWG NO.** **89088**
	REV F	**PAGE** 1 **OF** 20

1. SCOPE

1.1 Scope. This drawing describes the requirements for a fixed, film, 0.1 watt, power curve C, precision resistor.

1.2 Part or Identifying Number (PIN). The complete PIN is as follows (see 3.3.5 and 6.4):

89088	A	******	V	Y
Drawing number	Terminal finish (3.3.1)	Resistance (3.3.2 and 3.3.3)	Resistance tolerance (3.3.4)	Temperature characteristic (3.3.6)

2. APPLICABLE DOCUMENTS

2.1 Government documents.

2.1.1 Specifications, standards, and handbooks. The following specifications and standards form a part of this document to the extent specified herein. Unless otherwise specified, the issues of these documents are those cited in the solicitation or contract.

* DEPARTMENT OF DEFENSE STANDARDS

MIL-STD-202 - Tests Methods For Electronic and Electrical Components Parts.
MIL-STD-810 - Environmental Test Methods and Engineering Guidelines.
MIL-STD-1276 - Leads for Electronic Components Parts.

* (Copies of these documents are available online at http://quicksearch.dla.mil or from the DLA Document Services, 700 Robbins Avenue, Building 4D, Philadelphia, PA 19111-5094.)

2.2 Non-Government publications. The following document form a part of this document to the extent specified herein. Unless otherwise specified, the issues of the documents which are those cited in the solicitation or contract.

NATIONAL CONFERENCE OF STANDARDS LABORATORIES (NCSL)

* NCSL Z540.3 - Requirements for Calibration of Measuring and Test Equipment.

* (Copies of this document are available from http://www.ncsli.org/ or from the National Conference of Standards Laboratories (NCSL) International, 1800 30th Street, Suite 305, Boulder, CO 80301-1026.)

* 2.3 Order of precedence. Unless otherwise noted herein, or in the contract, in the event of a conflict between the text of this document and the references cited herein, the text of this document takes precedence. Nothing in this document, however, supersedes applicable laws and regulations unless a specific exemption has been obtained.

3. REQUIREMENTS

3.1 Item requirements. The individual item requirements shall be as specified herein.

3.2 Interface and physical dimensions. Resistors shall meet the interface and physical dimensions as specified herein (see figure 1).

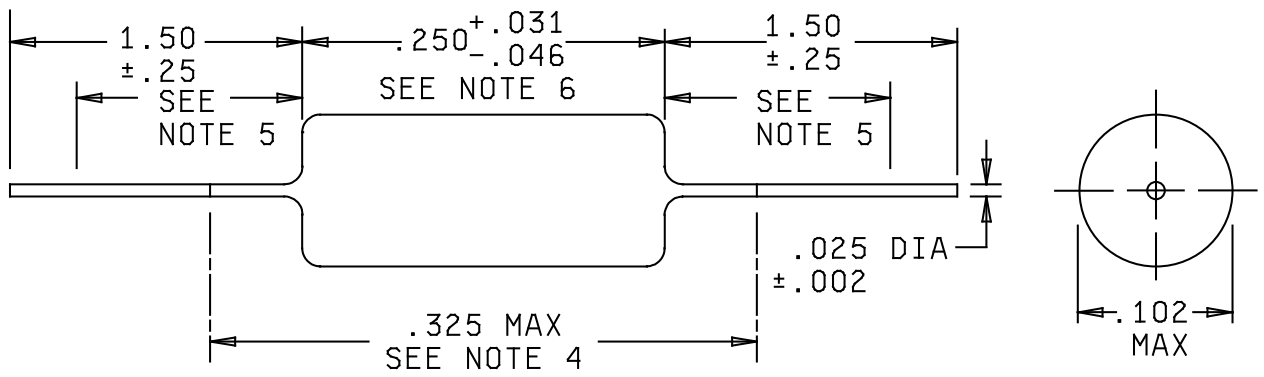

Inches	mm	Inches	mm
.0020	0.050	.1250	3.180
.0250	0.640	.2500	6.400
.0310	0.790	.3250	8.260
.0460	1.170	.5000	13.000
.0625	1.588	1.5000	38.000
.1020	2.590		

Notes:

1. Dimensions are in inches.
2. Metric equivalents are given for general information only.
3. The end of the body shall be the point at which the body diameter equals the nearest drill size larger than 250 percent of the nominal lead diameter.
4. Maximum length is clean lead to clean lead.
5. Resistance measuring point shall be 0.5 inch ±.125 inch for resistance values of 10 ohms or more and .0625 inch ±.025 inch for resistance values less than 10 ohms.

FIGURE 1. Fixed resistors, precision.

3.3 Electrical characteristics.

3.3.1 Termination finish. Termination material shall be in accordance with MIL-STD-1276 and table I.

TABLE I. Termination finish. 1/

Termination symbol	Termination material in accordance with MIL-STD-1276.
A	C32 Electroplated tin lead terminals.
B	C52 Hot solder dipped terminals.

1/ The maximum thickness of the hot solder dip coating as called for C52 in MIL-STD-1276 shall not be applicable.

3.3.1.1 Pure tin. The use of pure, as an underplate or final finish is prohibited both internally and externally. Tin content of resistors and solder shall not exceed 97 percent, by mass. Tin shall be alloyed with a minimum of 3 percent lead, by mass (see 6.3).

3.3.2 Resistance range. The resistance range shall be from 10 ohms to 0.5 megohm.

3.3.3 Resistance. The nominal resistance expressed in ohms is identified by six characters, consisting of five digits and a letter. The letter is used simultaneously as a decimal point and as a multiplier. For resistance values:

a. Greater than or equal to 10 ohms but less than 1,000 ohms, the letter “R” is used to represent a decimal point.

b. Greater than or equal to 1,000 ohms but less than 1 megohm, the letter “K” is used to represent a decimal point.

c. Greater than or equal to 1 megohm, the letter “M” is used to represent a decimal point.

All digits preceding and following the letters (R, K, and M) of the group represent significant figures. Minimum and maximum resistance values shall be as specified herein. The standard values for every decade shall follow the sequence specified in table II for resistance tolerances D and F. The resistance values for tolerances V, T, A, and B may be any value within the limits specified in 3.3.2, but it is preferred that values be chosen from the D column of table II.

TABLE II. Standard resistance values for the 10 to 100 decade.

Resistance tolerance											
(0.5) D	(1.0) F	(0.5) D	(1.0) F	(0.5) D	(1.0) F	(0.5) D	(1.0) F	(0.5) D	(1.0) F	(0.5) D	(1.0) F
10.0	10.0	14.7	14.7	21.5	21.5	31.6	31.6	46.4	46.4	68.1	68.1
10.1		14.9		21.8		32.0		47.0		69.0	
10.2	10.2	15.0	15.0	22.1	22.1	32.4	32.4	47.5	47.5	69.8	69.8
10.4		15.2		22.3		32.8		48.1		70.6	
10.5	10.5	15.4	15.4	22.6	22.6	33.2	33.2	48.7	48.7	71.5	71.5
10.6		15.6		22.9		33.6		49.3		72.3	
10.7	10.7	15.8	15.8	23.2	23.2	34.0	34.0	49.9	49.9	73.2	73.2
10.9		16.0		23.4		34.4		50.5		74.1	
11.0	11.0	16.2	16.2	23.7	23.7	34.8	34.8	51.1	51.1	75.0	75.0
11.1		16.4		24.0		35.2		51.7		75.9	
11.3	11.3	16.5	16.5	24.3	24.3	35.7	35.7	52.3	52.3	76.8	76.8
11.4		16.7		24.6		36.1		53.0		77.7	
11.5	11.5	16.9	16.9	24.9	24.9	36.5	36.5	53.6	53.6	78.7	78.7
11.7		17.2		25.2		37.0		54.2		79.6	
11.8	11.8	17.4	17.4	25.5	25.5	37.4	37.4	54.9	54.9	80.6	80.6
12.0	12.1	17.6		25.8		37.9		55.6		81.6	
12.1		17.8	17.8	26.1	26.1	38.3	38.3	56.2	56.2	82.5	82.5
12.3	12.4	18.0		26.4		38.8		56.9		83.5	
12.4		18.2	18.2	26.7	26.7	39.2	39.2	57.6	57.6	84.5	84.5
12.6		18.4		27.1		39.7		58.3		85.6	
12.7	12.7	18.7	18.7	27.4	27.4	40.2	40.2	59.0	59.0	86.6	86.6
12.9		18.9		27.7		40.7		59.7		87.6	
13.0	13.0	19.1	19.1	28.0	28.0	41.2	41.2	60.4	60.4	88.7	88.7
13.2		19.3		28.4		41.7		61.2		89.8	
13.3	13.3	19.6	19.6	28.7	28.7	42.2	42.2	61.9	61.9	90.9	90.9
13.5		19.8		29.1		42.7		62.6		92.0	
13.7	13.7	20.0	20.0	29.4	29.4	43.2	43.2	63.4	63.4	93.1	93.1
13.8		20.3		29.8		43.7		64.2		94.2	
14.0	14.0	20.5	20.5	30.1	30.1	44.2	44.2	64.9	64.9	95.3	95.3
14.2		20.8		30.5		44.8		65.7		96.5	
14.3	14.3	21.0	21.0	30.9	30.9	45.3	45.3	66.5	66.5	97.6	97.6
14.5		21.3		31.2		45.9		67.3		98.8	

3.3.4 Resistance tolerance. Resistors are available in tolerances (V) ±.005 percent, (T) ±.01 percent, (A) ±.05 percent, (B) ±.1 percent, (D) ±.5 percent, and (F) ±1.0 percent.

3.3.5 Reactance. If circuit reactance is critical for your application, the contractor shall contact the manufacturer for the circuit reactance characteristics (see 6.4).

3.3.6 Temperature characteristics. Resistors are available with temperature coefficients codes Y, A, B, C, D, E, F, and G, as specified in table III.

TABLE III. Characteristic.

Resistance temperature characteristic (referenced to 25°C) (ppm/°C)												
RTC code	Temperature °C											
	-55		-15		+65		+125		+150		+175	
	Min	Max	Min	Max	Min	Max	Min	Max	Min	Max	Min	Max
Y	-0	5	-1.5	3.5	-4	1.0	-5	0	-5.5	-0.5	-7	-1
A	-2.5	2.5	-2.5	2.5	-2.5	2.5	-2.5	2.5	-3.5	3.5	-4.5	4.5
B	-5	5.0	-5	5.0	-5	5.0	-5	5	-6	6.0	-7	7.0
C	-10	10	-10	10	-10	10	-10	10	-12	12.0	-15	15
D	-2.5	2.5	-1.5	1.5	-1.5	1.5	-2.5	2.5	-3.5	3.5	-4.5	4.5
E	-5	5.0	-2.5	2.5	-2.5	2.5	-5	5.0	-6	6.0	-7	7.0
F	-10	10	-5	5.0	-5	5.0	-10	10	-12	12.0	-15	15.0
G	0.7	3.7	-0.7	2.3	-2.8	0.2	-3.3	-0.3	-4.1	-1.1	-4.5	-1.5

3.4 Power rating. The power rating shall be 0.100 watt at +85°C for power rating curve C. For operation at temperature in excess of +85°C, derate in accordance with figure 2.

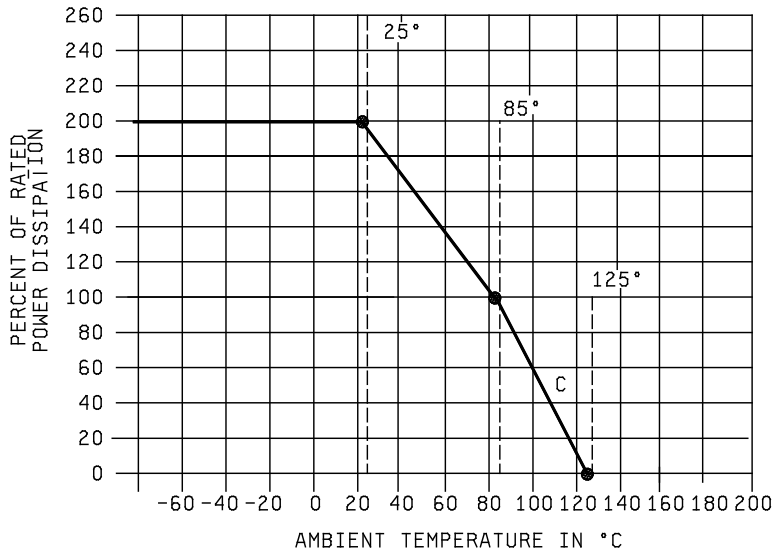

NOTE: These curves indicate the percentage of nominal wattage to be applied at temperatures higher and lower than 85°C for the same ΔR that would occur at 85°C during life testing. However, at no time shall the applied voltage exceed the maximum for each style.

FIGURE 2. Derating curves for various ambient temperatures.

3.5 Voltage rating. The maximum continuous working voltage shall not exceed 200 volts.

3.6 Maximum weight. The maximum weight shall not exceed 0.00221 pound (1 gram).

3.7 Power conditioning. When resistors are tested as specified in 4.5, there shall be no evidence of mechanical damage; the change in resistance shall not exceed ±(.05 percent +.001 ohm) for power conditioning, thermal shock, and overload test combined (see 3.8 and 3.9).

3.8 Thermal shock. When resistors are tested as specified in 4.6, there shall be no evidence of mechanical damage; the change in resistance shall not exceed ±(.05 percent +.001 ohm) for power conditioning, thermal shock, and overload tests combined (see 3.7 and 3.9).

3.9 Overload. When resistors are tested as specified in 4.7, there shall be no evidence of arching, burning, or charring; the change in resistance shall not exceed ±(.05 percent +.001 ohm) for power conditioning, thermal shock, and overload tests combined (see 3.7 and 3.8).

3.10 DC resistance. When resistors are tested as specified in 4.8, the dc resistance shall be within the specified tolerance of the nominal resistance (see 3.3.3) for all products deliverable on the contract.

3.11 Hermetic seal (when applicable). For the purposes of this specification, a hermetically sealed resistor is one in which the resistive element is contained within a sealed enclosure of ceramic, glass, metal, or combinations thereof; where sealing is accomplished by material fusion, welding, brazing, or soldering. When tested as specified in 4.9, the resistors supplied shall be capable of passing the seal tests, meeting a fine leak rate requirement of not more than 1×10^{-7} atm cc/s, and a gross seal test showing no evidence of a continuous stream of bubbles emanating from the specimen.

3.12 Solderability. When resistors are tested as specified in 4.10, they shall meet the criteria for wire-lead terminal evaluation in the test method.

3.13 Resistance to solvents. When resistors are tested as specified in 4.11, there shall be no evidence of mechanical damage and the markings shall remain legible.

3.14 Resistance temperature characteristic. When resistors are tested as specified in 4.12, the resistance temperature characteristic, at each of the temperatures specified in table VII, referred to 25°C ±5°C shall not exceed the value specified in table III for the applicable characteristic.

3.15 Low temperature storage and operation. When resistors are tested as specified in 4.13, there shall be no evidence of mechanical damage. The change in resistance shall not exceed ±(0.01 percent +.001 ohm).

3.16 Terminal strength. When resistors are tested as specified in 4.14, there shall be no evidence of breaking or loosening of terminals from the resistor form, or chipping of coating, or other evidence of mechanical damage. The change in resistance shall not exceed ±(.01 percent +.001 ohm).

3.17 Dielectric withstanding voltage. When resistors are tested as specified in 4.15, there shall be no evidence of flashover, mechanical damage, arching, or insulation breakdown. The change in resistance shall not exceed ±(.01 percent +.001 ohm).

3.18 Insulation resistance. When resistors are tested as specified in 4.16, the insulation resistance shall be not less than 10,000 megohms.

3.19 Resistance to soldering heat. When resistors are tested as specified in 4.17, there shall be no evidence of mechanical damage. The change in resistance shall not exceed ±(.01 percent +.001 ohm).

3.20 Moisture resistance. When resistors are tested as specified in 4.18, there shall be no evidence of mechanical damage. The change in resistance for nonhermetically sealed resistors shall not exceed ±(.05 percent +.001 ohm). For hermetically sealed resistors, the change in resistance shall not exceed ±(.01 percent +.001 ohm). In addition, the change in resistance due to dielectric withstanding voltage shall not exceed ±(.02 percent +.001 ohm), and the insulation resistance shall be 100 megohms minimum.

3.21 Shock (specified pulse). When resistors are tested as specified in 4.19, there shall be no evidence of mechanical or electrical damage. The change in resistance shall not exceed ±(.01 percent +.001 ohm). There shall be no electrical discontinuity during the test.

3.22 Vibration, high frequency. When resistors are tested as specified in 4.20, there shall be no evidence of mechanical damage. The change in resistance shall not exceed ±(.01 percent +.001 ohm). There shall be no electrical discontinuity during the test.

3.23 Life. When resistors are tested as specified in 4.21, there shall be no evidence of mechanical damage. The change in resistance between the initial measurement and any of the succeeding measurements, up to and including 1,000 hours, shall not exceed ±(.05 percent +.001 ohm).

3.24 High temperature exposure. When resistors are tested as specified in 4.22, there shall be no evidence of mechanical damage. The change in resistance shall not exceed ±(.2 percent +.001 ohm) for nonhermetically sealed and hermetically sealed resistors. Following this test, the dielectric withstanding voltage shall be as specified in 3.17, and the insulation resistance shall be 1,000 megohms minimum

3.25 Current noise. When resistors are tested as specified in 4.23, the current noise index shall not exceed -32 dB, unless otherwise specified.

3.26 Voltage coefficient (resistors of 1,000 ohms and over). When resistors are tested as specified in 4.24, the voltage coefficient shall not exceed 0.0001 percent per volt.

3.27 Thermal EMF. When resistors are tested as specified in 4.25, the thermal EMF (Seebeck Effect) shall not exceed 5.0 microvolt per °C.

3.28 Fungus. The manufacturer shall certify that all materials are fungus resistant or shall perform the test specified in 4.26. When resistors are tested as specified in 4.26, examination shall disclose no evidence of fungus growth on the external surface of the resistor.

3.29 Marking. Resistors shall be marked with the PIN assigned herein (see 1.2) and manufacturer's identification code (CAGE or logo).

3.29.1 Minimum marking. Due to size limitations, this style resistor shall be marked with the following minimum information:

042AM: Date code, reactance, resistance tolerance.
477485Y: Resistance value and temperature characteristic.

The complete marking is required on the unit package. Where manufacturers are able to provide more information, the following is preferred in the sequence presented: Style, manufacturer's trade mark, production lot code, and source code.

3.30 Recycled, recovered, or environmentally preferable materials. Recycled, recovered, or environmentally preferable materials should be used to the maximum extent possible provided that the material meets or exceeds the operational and maintenance requirements, and promotes economically advantageous life cycle costs.

* 3.31 Manufacturer eligibility. To be eligible for listing as an approved source of supply, a manufacturer shall perform the group A and group B inspections specified herein on a sample agreed upon by the manufacturer and DLA Land and Maritime-VAT.

* 3.31.1 Certificate of compliance. A certificate of compliance shall be required from manufacturers requesting to be listed as an approved source of supply.

3.32 Workmanship. Resistors shall be uniform in quality and free from defects that will affect life, serviceability, or appearance.

4. VERIFICATION

4.1 Qualification inspection. Qualification inspection is not applicable to this document.

4.2 Conformance inspection.

4.2.1 Inspection of product for delivery. Inspection of product for delivery shall consist of group A and group B inspections.

4.2.1.1 Group A inspection. Group A inspection shall consist of the inspections specified in table IV, and shall be made on the same set of sample units, in the order shown.

TABLE IV. Group A inspection.

Inspection	Requirement paragraph	Test method paragraph	Number of samples
Subgroup I Power conditioning Thermal shock Overload 1/ DC resistance 2/	 3.7 3.8 3.9 3.10	 4.5 4.6 4.7 4.8	100 percent
Subgroup II Visual and mechanical inspection	3.2, and 3.29	4.4	13
Subgroup III Solderability	3.12	4.10	5

1/ At the manufacturer's option, the determination of resistance change may be by any method which is within the accuracy requirements of this specification. The determination of resistance change shall be made upon completion of the overload test; the allowable change in resistance for the combined tests shall be specified (see 3.9).

2/ Resistors shall meet the specified initial resistance tolerance after being subjected to the preceding tests. The resistance measurement made upon completion of the overload test may be used if a measurement has been made which can, without conversion, be directly related to nominal resistance value and tolerance.

4.2.1.2 Subgroup I. Subgroup I tests shall be performed on 100 percent of the product supplied under this specification. Resistors that are out of resistance tolerance or which experience a change in resistance greater than that permitted for the tests of this subgroup shall be removed from the lot. Lots having more than 5 percent total rejects or one resistor, whichever is greater, due to exceeding the specified resistance change limit, shall not be furnished on the contract.

4.2.1.3 Subgroup II. A sample of 13 parts shall be randomly selected, if one or more defects are found, the lot shall be rescreened and defects removed. A new sample of 13 parts shall then be randomly selected. If one or more defects are found in this second sample, the lot shall be rejected and shall not be supplied against this document.

4.2.1.4 Subgroup III (solderability). A sample of 5 parts shall be randomly selected, as an option; the manufacturer may use electrical rejects from subgroup I test for all or part of the sample. If there are one or more defects, the lot is rejected. The manufacturer may use the following for corrective action:

a. Each lot that was used to form the failed lot shall be individually submitted to the solderability test. Lots that pass the solderability test are available for shipment.

b. The failed lot is submitted to a 100 percent hot solder dip. A subsequent solderability test shall then be performed. If the lot passes, it is available for shipment; if the lot fails, the manufacturer may perform the hot solder dip one additional time. If the lot fails, the lot is considered rejected and shall not be supplied to this drawing.

4.2.1.4.1 Disposition of samples. The solderability test is considered a destructive test and samples submitted to the solderability test shall not be supplied on the contract.

4.3.2 Group B inspection. Group B inspection shall consist of the inspections specified in table V, in the order shown.

TABLE V. Group B inspection.

Inspection	Requirement paragraph	Test method paragraph	Number of sample units for inspection	Number of failures allowed
Subgroup I				
Life	3.23	4.21	5	0
Subgroup II				
Resistance to soldering heat	3.19	4.17		
Moisture resistance	3.20	4.18	5	0
Subgroup III				
Solderability	3.12	4.10		
Resistance to solvents	3.13	4.11	8	0
Subgroup IV				
Resistance temperature characteristic	3.14	4.12		
Dielectric withstanding voltage	3.17	4.15		
Insulation resistance	3.18	4.16	5	0
Low temperature storage and operation	3.15	4.13		
Terminal strength	3.16	4.14		
Hermetic seal (when applicable)	3.11	4.9		
Subgroup V				
Shock (specified pulse)	3.21	4.19		
Vibration, high frequency	3.22	4.20	5	0
Hermetic seal (when applicable)	3.11	4.9		
Subgroup VI				
High temperature exposure	3.24	4.22	5	0
Subgroup VII				
Thermal EMF	3.27	4.25		
Voltage coefficient (resistors of 1,000 ohms and over)	3.26	4.24	5	0
Current Noise	3.25	4.23		
Fungus	3.28	4.26		

4.3.2.1 Certification. The acquiring activity, at its discretion, may accept a certificate of compliance with group B requirements in lieu of performing group B tests (see 6.2c).

4.3.2.2 Action in case of failure. If any of the subgroups fail Group B testing and an appropriate lot screen can be established the lot shall be screened and a new set of samples (see table V for number of samples), from the screened lot, shall be submitted to the subgroup(s) that failed. If one or more defects are found in the resubmitted samples, the lot shall be rejected and shall not be supplied to this specification.

4.3.2.3 Disposition of sample units. Sample units which have been subjected to group B inspections shall not be supplied to this specification.

4.4 Visual and mechanical inspection. Resistors shall be examined to verify that the materials, design, construction, physical dimensions, marking, and workmanship are in accordance with the applicable requirements 3.2, 3.29, and 3.32.

4.5 Power conditioning (see 3.7). Resistors shall be conditioned in accordance with method 108 of MIL-STD-202. The following details and exceptions shall apply:

a. Method of mounting: Resistors shall be supported by their terminal leads. Resistors shall be arranged so that the temperature of any one resistor shall not appreciably influence the temperature of any other resistor. If forced air circulation is employed, the air velocity shall not exceed 500 feet per minute.

b. Test temperature and tolerance: 20°C to 45°C.

c. Initial measurements: The initial dc resistance shall be measured at room temperature before mounting. This initial measurement shall be used for all subsequent measurements under the same conditions.

d. Operating conditions: Rated dc continuous working voltage or rated working voltage from an ac supply at commercial-line frequency, intermittently, 1.5 hours "on" and 0.5 hour "off" for a minimum of 96 hours. Where the resulting waveform is other than that of a commercial-line, voltages shall be set using a true rms voltmeter and the peak voltage shall not exceed 2.5 times the rated continuous working voltage. Each resistor shall dissipate wattage equal to the wattage of the resistor.

e. Measurements after test: DC resistance shall be measured as specified in 4.8, following the test of 4.7.

f. Examination after conditioning: Resistors shall be examined for evidence of mechanical damage.

4.6 Thermal shock (see 3.8). Resistors shall be tested in accordance with method 107 of MIL-STD-202. The following details and exceptions shall apply:

a. Special mounting: Resistors shall be mounted by means other than soldering or may be placed in trays. When trays are used, they must be designed to present a minimum of obstruction to the airstream. In no case shall the fixture prevent the specified ambient temperature from being achieved within 4 minutes after resistors are placed in chamber. One chamber may be used for this test.

b. Measurement before cycling. DC resistance shall be measured as specified in 4.8.

c. Test condition: Test condition C, except that the extreme high temperature shall be 125°C +3°C -0°C for power rating curve C. These extreme temperatures shall be achieved within 6 minutes.

d. Measurement after cycling: DC resistance shall be measured as specified in 4.8 and following test of 4.7.

e. Examination after tests: Resistors shall be examined for evidence of mechanical damage.

4.7 Overload (see 3.9). Resistors shall be tested as follows: Resistors may be mounted in any position and allotted any size space deemed necessary by the manufacturer. Forced air cooling may be used to maintain a test ambient temperature range of 20°C to 30°C. The average velocity of the forced air, if employed, shall not exceed 500 feet per minute.

4.7.1 Procedure. The load of 6.25 times the rated power for 5 seconds or 2 times the rated power for 10 minutes shall be applied as applicable. The maximum voltage applied shall be 500 V rms.

4.8 DC resistance. (see 3.10). Resistors shall be tested in accordance with method 303 of MIL-STD-202. The following details and exception shall apply:

* a. Measuring apparatus: Different types of measuring test equipment (multimeter, bridges, or equivalent) are permitted to be used on the initial and final readings of this test, provided the equipment is the same style, model, or if it can be shown that the performance of the equipment is equivalent. All test equipment shall be calibrated in accordance with NCSL Z540.3.

b. Limit of error of measuring apparatus shall not exceed one-fourth of the resistor tolerance or the resistance change limit for which the measurement is being made. Manufacturers, at their option, may use the apparatus of less accuracy, provided limits are reduced to fully compensate for accuracy deviation.

c. Test voltage for bridges: Measurements of resistance shall be made by using the test voltages specified in table VI. The test voltage chosen, whether maximum voltage or a lower voltage which would still provide the sensitivity required, shall be applied across the terminals of the resistor. This same voltage shall be used whenever a subsequent resistance measurement is made.

TABLE VI. DC resistance test voltages.

Resistance, nominal	Maximum test voltage	
	0.5 watt or greater	Less than 0.5 watt
Ohms	Volts	Volts
10 to 98.8 inclusive	1	1
100 to 980 inclusive	3	3
1,000 to 9,800 inclusive	10	3
10,000 to 98,800 inclusive	30	10
0.1 megohm or higher	100	30

d. Measurement energy for electronic test equipment: The measurement energy applied to the unit under test shall not exceed 10 percent of the +25°C rated wattage times 1 second.

e. Resistance measurement point: See figure 1, note 5.

f. Temperature: The temperature at which subsequent and final resistance measurements are made in each test shall be within ±2°C of the temperature at which the initial resistance measurement was made.

4.9 Hermetic seal (when applicable) (see 3.11). Resistors shall be tested in accordance with method 112 of MIL-STD-202.

a. Test condition C: Procedure IIIa or procedure IIIb, and gross leak test condition A shall be used.

4.10 Solderability (see 3.12). Resistors shall be tested in accordance with method 208 of MIL-STD-202. Both leads shall be tested.

4.11 Resistance to solvents (see 3.13). Resistors shall be tested in accordance with method 215 of MIL-STD-202. The following details shall apply:

a. Marked portion of the resistor body shall be brushed.

b. Resistor shall be examined for mechanical and legibility of markings.

4.12 Resistance temperature characteristic (see 3.14). Resistors shall be tested in accordance with method 304 of MIL-STD-202. The following details and exceptions shall apply:

a. Referenced temperature: Room ambient temperature.

b. Test temperature: In accordance with table VII.

c. Stability of temperature: Resistors shall be maintained for 30 minutes to 45 minutes within 1°C at each of the test temperatures in table VII. This tolerance shall be maintained at the established test temperatures. Allow resistor to stabilize at the temperature in table VII for a minimum of 5 minutes.

d. The resistance temperature coefficient will be based on the stabilized temperature.

TABLE VII. Resistance temperature characteristic.

Sequence 1/	Temperature Qualification and group inspection
	°C
1	2/ 25 ±3
2	-15 ±3
3	-55 ±3
4	2/ 25 ±3
5	+65 ±3
6	+125 ±3

1/ At the option of the manufacturer, the reverse sequence of table VII may be as follows:

1. 25 ±3
2. +125 ±3
3. +65 ±3
4. +25 ±3
5. -55 ±3
6. -15 ±3

2/ Reference temperature for each of the succeeding temperatures.

4.13 Low temperature storage and operation (see 3.15).

4.13.1 Mounting. Resistors shall be mounted by their terminals so that there is at least 1 inch of free airspace around each resistor, and the mounting is in such a position with respect to the air that it offers substantially no obstruction to the flow of air across and around the resistors.

4.13.2 Procedure. Following a dc resistance measurement, the mounted resistors shall be placed in a cold chamber at room temperature. The temperature shall be gradually decreased to -65°C +0°C, -5°C within 1.5 hours. At the option of the manufacturer, the resistors may be placed in the cold chamber when the chamber is already at the extreme low temperature. Resistors shall be maintained at this temperature for 24 hours ±4 hours. After the storage period at the decreased temperature, full rated continuous working voltage (see 3.5) shall be applied for 45 minutes. The resistors may be loaded individually or in parallel. Fifteen minutes +5 minutes, -0 minutes after the removal of the voltage, the temperature in the chamber shall be gradually increased to room temperature within not more than 8 hours. The resistors shall be removed from the chamber and maintained at a temperature of 25°C ±5°C for approximately 24 hours. The dc resistance shall then be measured as specified in 4.9 and resistors shall be examined for evidence of mechanical damage.

4.14 Terminal strength (see 3.16). Resistors shall be tested in accordance with method 211 of MIL-STD-202 with the following exceptions:

a. Pull test:

(1) Test condition letter A.

(2) Measurement before test: DC resistance as specified in 4.8.

(3) Applied force: Two pounds in all styles.

b. Twist test:

(1) Test condition letter D.

(2) Measurement after test: DC resistance as specified in 4.8. Examine for evidence of breaking and loosening of terminals and chipping of coating.

4.15 Dielectric withstanding voltage (see 3.17).

4.15.1 Atmospheric pressure. Resistors shall be tested in accordance with method 301 of MIL-STD-202. The following details and exceptions shall apply:

a. Special preparations. Resistors with axial leads shall be clamped in the trough of a 90° metallic V-block of such size that the body of the resistor does not extend beyond the extremities of the block. The resistor leads shall be positioned so that the distance between the resistor lead and any point of the V-block is not less than the radius of the resistor, minus the radius of the lead wire (see figure 3).

b. Initial measurement: DC resistance shall be measured as specified in 4.8.

c. Magnitude of test potential: Sine wave test potential of magnitude shall be 450 volts.

d. Nature of potential: An ac supply at commercial-line frequency (not more than 100 Hz) and waveform.

e. Rate of application of test voltage: One hundred volts per second.

f. Duration of application of test voltage: One minute.

g. Points of application of test voltage: Between the resistor terminals connected together and the V-block or metal straps, as applicable.

h. Measurement after test: DC resistance shall be measured as specified in 4.8.

i. Examination after test: Resistors shall be examined for evidence of flashover, mechanical damage, arching, and insulation breakdown.

4.15.2 Barometric pressure (reduced). Resistors shall be tested in accordance with method 105 of MIL-STD-202. The following details and exception shall apply:

a. Method of mounting: As specified in 4.15.1a.

b. Initial measurement: DC resistance shall be measured as specified in 4.8.

c. Test condition D (100,000 feet).

d. Magnitude of test voltage: Sine wave test potential of magnitude shall be 200 volts.

e. Nature of potential: As specified in 4.15.1d.

f. Rate of application of test voltage: One hundred volts per second.

g. Duration of test: One minute.

h. Points of application of test voltage: As specified in 4.15.1g.

i. Final measurement: DC resistance shall be measured as specified in 4.8.

j. Examination after test: As specified in 4.15.1i.

4.16 Insulation resistance (see 3.18). Resistors shall be tested in accordance with method 302 of MIL-STD-202. The following details and exception shall apply:

a. Test condition B (500 volts).

b. Special preparations: As specified in 4.15.1a.

c. Points of application: Between the resistor terminals connected together and the V-block.

4.17 Resistance to soldering heat (see 3.19). Resistors shall be tested in accordance with method 210 of MIL-STD-202. The following details and exceptions shall apply:

a. Measurement before test: DC resistance shall be measured as specified in 4.8.

b. Special preparation of specimen: Sample units shall not have been soldered during any of the previous tests.

c. Depth of immersion in molted solder: To a point 1/8 inch from the resistor body.

d. Test condition A.

e. Measurement after test: After completion of terminal immersion and following a 45-minute cooling period, dc resistance shall be measured as specified in 4.8.

f. Examination after test: Resistors shall be examined for evidence of mechanical damage.

4.18 Moisture resistance (see 3.20). Resistors shall be tested in accordance with method 106 of MIL-STD-202. The following details and exceptions shall apply:

a. Mounting: Soldered by their leads to rigid mounts or terminal lugs, the spacing of the mounts or terminal lugs shall be such that the length of each resistor lead is approximately .375 inch (9.53 mm) when measured from the edge of the supporting terminal to the V-shaped metal strap, where the width is equal to that of the resistor (see figure 3). The strap shall be made of corrosion resistant metal and kept in contact with the resistor body (see figure 3) with a nonconducting, noncorrosive support whose width is less than that of the body and will not act as a moisture trap. The mounting straps may be individual for each resistor or continuous for all resistors.

b. Initial measurement: Immediately following the initial drying period, dc resistance shall be measured as specified in 4.8.

c. Polarization and loading voltage: The resistance value selected shall be divided equally as possible for polarization and load.

(1) Polarization voltage: During step 1 through step 6 inclusive, a 100 volt dc potential shall be applied only to those resistors that have a polarizing strap. This potential shall be applied with the positive lead connected to the resistor terminals tied together, and the negative lead connected to the polarizing straps.

(2) Loading voltage: During the first 2 hours of step 1 and step 4, a dc test potential equivalent to 100 percent rated wattage but not exceeding the maximum rated voltage shall be applied to those resistors that do not have a polarizing strap specified in 4.18a.

d. Subcycle: Subcycle step 7b shall not be applicable. Step 7a shall be performed during any five of the first nine cycles only. All polarization straps may be removed to perform step 7a and shall then be replaced prior to starting the next cycle.

e. Final measurements: Upon completion of step 6 of the final cycle, the resistors shall be held at the high humidity condition and a temperature of 25°C ±2°C for 1.5 hours to 3.5 hours. The same straps used for polarizing the resistors may also be used for the dielectric withstanding voltage and insulation resistance tests. Resistors shall be removed from the chamber; within 0.5 hour and without any additional handling, the dc resistance, dielectric withstanding voltage, and insulation resistance shall be measured as specified in 4.8, 4.15, and 4.16, respectively. The sample units shall not be subjected to forced air circulation during the tests.

f. Examination after tests: Resistors shall be examined for evidence of mechanical damage.

4.19 Shock, specified pulse (see 3.21). Resistors shall be tested in accordance with method 213 of MIL-STD-202. The following details and exceptions shall apply (see figure 4):

a. Special mounting means: Resistors shall be rigidly mounted on appropriate jig fixtures with their leads supported at a distance of .250 inch (6.35 mm) from the resistor body. The resistor shall be mounted with the body clamped or cemented to a flat surface. Where used, the cement material shall not extend above the centerline in a vertical plane or beyond the resistor body ends in a horizontal plane. In no case shall the resistor body be completely encapsulated (see figure 1). These fixtures shall be constructed to insure that the points of the resistor-mounting supports shall have the same motion as the shock table. Test leads used during this test shall be no larger than AWG size 22 stranded wire, so that the influence of the test lead on the resistor shall be held to a minimum. The test-lead length shall be no greater than is necessary. In all cases, the resistors shall be mounted in relation to test equipment so that the stress applied is in the direction that would be considered most detrimental.

b. Measurement before shock: DC resistance shall be measured as specified in 4.8.

c. Number and direction of applied shock: The resistors shall be subjected to a total of 10 shocks in each of three mutually perpendicular planes, two perpendiculars and the other parallel to the longitudinal axis of the resistor.

d. Test condition I (100 g's, 6 milliseconds (ms) sawtooth).

e. Measurement during shock: Each resistor shall be monitored to determined electrical discontinuity by a method that shall at least be sensitive enough to monitor or register, automatically, any electrical discontinuity of 0.1 ms or greater.

f. Measurement after shock: DC resistance shall be measured as specified in 4.8.

g. Examination after test: Resistors shall be examined for evidence of mechanical and electrical damage.

4.20 Vibration, high frequency (see 3.22). Resistors shall be tested in accordance with method 204 of MIL-STD-202. The following details and exceptions shall apply (see figure 4):

a. Mounting of specimens: Resistors shall be mounted on appropriate jig fixtures as specified in 4.19a. These fixtures shall be constructed to insure that the points of the resistor mounting supports shall have the same motion as the vibrating table. The fixtures shall also be of a construction that shall preclude any resonance in the fixture when subjected to vibration within the test frequency range. The fixture shall be monitored for these features on the vibration table. Test leads used during this test shall be no larger than AWG size 22 stranded wire, so that the influence of the test lead on the resistor will be held to a minimum. The test lead length shall be no greater than is necessary. A shielded cable, which may be necessary because of the field surrounding the vibration table, shall be clamped to the resistor mounting jig.

b. Initial measurement: DC resistance shall be measured as specified in 4.8.

c. Test condition D.

d. Direction of motion: The direction of motion shall be in each of three mutually perpendicular directions, two perpendicular and the other parallel to the longitudinal axis of the resistor. Duration for radial leaded device shall be 4 hours in each plane with the total test time of 12 hours; for an axial leaded device, duration shall be 4 hours in two planes with a total test time of 8 hours.

e. Measurements during vibration: Each resistor shall be monitored to determine electrical discontinuity by a method that shall at least be sensitive enough to automatically monitor or register any electrical discontinuity of 0.1 ms or greater duration.

f. Measurement after vibration: DC resistance shall be measured as specified in 4.8.

g. Examination after test: Resistors shall be examined for evidence of mechanical damage.

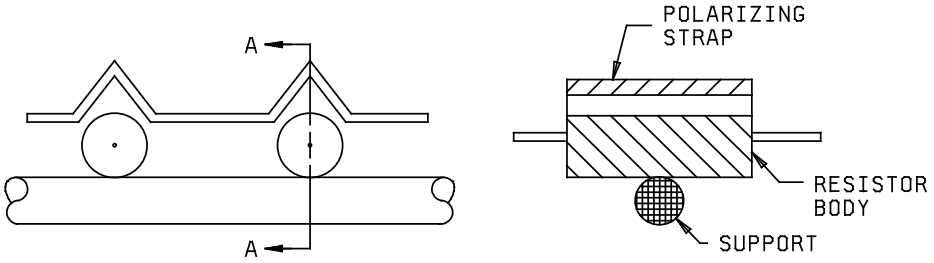

FIGURE 3. Mounting straps for moisture resistance, dielectric withstanding voltage, and insulation resistance tests.

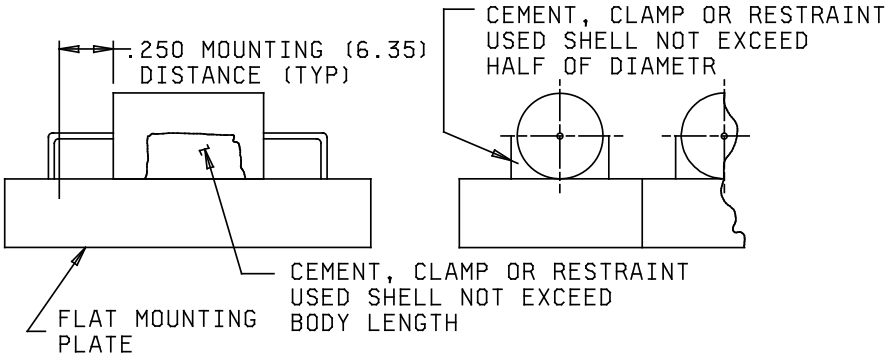

NOTES:
1. Dimensions are in inches.
2. Metric equivalents are in parentheses.
3. Metric equivalents are given for general information only.
4. Following test, resistors shall be unmounted and examined for mechanical and electrical damage.

FIGURE 4. Mounting for shock and vibration, high frequency tests.

4.21 Life (see 3.23). Resistors shall be tested in accordance with method 108 of MIL-STD-202. The following details and exceptions shall apply:

a. Method of mounting: Resistors shall be mounted on lightweight terminals (see figure 5). The effective length of each terminal shall be 1 inch (25.4 mm). Resistors shall be arranged so that the temperature of a resistor shall not appreciably influence the temperature of another resistor. The voltage at the resistor terminal shall be at least 95 percent of the specified test voltage.

b. Test temperature: 85°C ±5°C.

c. Initial measurements: Measurements may be made inside or outside the chamber.

(1) Inside chamber: When measurements are made inside the chamber, the initial dc resistance shall be measured after mounting at the applicable test temperature, after temperature stabilization, and within 8 hours of exposure of the resistors to the test temperature. This initial measurement shall be used as the reference temperature for all subsequent measurements under the same condition.

(2) Outside chamber: When measurements are made outside the chamber, the initial dc resistance shall be measured after mounting at the room temperature. This initial measurement shall be used as the reference temperature for all subsequent measurements under the same condition.

d. Operating conditions: Rated dc continuous working voltage, or filtered or nonfiltered full wave rectified ac voltage, shall be applied intermittently, 1.5 hours “on” and 0.5 hour “off”, for the applicable number of hours (see 4.21f), and at the applicable test temperature. "On time" shall be three quarters of the total elapsed time. During the "on" cycle, the voltage shall be regulated and controlled to maintain ±5 percent of the rated continuous working voltage.

e. Test condition: One thousand hours elapsed time for inspection with all samples.

f. Measurements during test:

(1) DC resistance shall be measured at the end of the 30 minutes “off” periods after 250 hours +72 hours, -24 hours; 500 hours +72 hours, -24 hours; and 1,000 hours +96 hours, -24 hours elapsed.

(2) Measurements outside of the chamber: When measurements are made outside the chamber, resistors shall be outside of the chamber for a minimum of 45 minutes and stabilized before measurement.

g. Examination after test: Resistors shall be examined for evidence of mechanical damage.

4.22 High temperature exposure (see 3.24).

a. Mounting: Resistors shall be mounted by their normal mounting means.

b. Initial measurements: DC resistance shall be measured as specified in 4.8 at room ambient conditions.

c. Procedure: Following initial resistance measurements, resistors shall be placed in a chamber maintained 125°C +3°C, -0°C for power rating curve C for 1,000 hours with no load applied.

d. Measurement during test: 250 hours +48 hours, -0 hours.

e. Final measurements: After removal from test chamber, resistors shall be permitted to stabilize at room ambient temperature. Within 6 hours after removal, dielectric withstanding voltage, insulation resistance, and dc resistance shall be measured as specified in 4.15, 4.16, and 4.8, respectively. Resistors shall be examined for evidence of mechanical damage.

4.23 Current noise (see 3.25). Current noise shall be measured in accordance with method 308 of MIL-STD-202.

4.24 Voltage coefficient (resistors of 1,000 ohms and over) (see 3.26). Resistors shall be tested in accordance with method 309 of MIL-STD-202. The continuous working voltage shall be as specified (see 3.5).

4.25 Thermal EMF (see 3.27).

4.25.1 Mounting. Resistors shall be mounted by inserting one lead wire to a depth of 0.50 inch (12.7 mm) from the body in the test apparatus of figure 6. The other lead shall be connected to one terminal of the test instrument by a solid copper wire. The test instrument shall be placed at least 18 inches from the apparatus to avoid undue heating.

4.25.2 Test instrument. Keithley model 155 microvoltmeter or equivalent, having a sensitivity of at least 1 microvolt full scale and an input impedance of at least 1 megohm.

4.25.3 Procedure.

a. The resistor shall be mounted in the test block with the apparatus at ambient temperature (see figure 5 and figure 6.).

b. The temperature of the block shall be raised to approximately 5°C above ambient. After the temperature has been stabilized for at least 5 minutes, the thermal output voltage and the temperature of the block shall be measured and recorded.

c. The temperature shall then be raised to approximately 10°C above ambient, and the thermal output voltage and the temperature shall be measured and recorded after the temperature of the block has stabilized for 5 minutes, minimum.

d. A third thermal output voltage shall be measured as in 4.25.3c except the temperature of the block shall be approximately 15 degrees above ambient.

e. Plot microvolt thermal output voltage against the recorded differential temperature above ambient of the three test points and draw a best fit straight line through these points.

f. The slope of the line determined in 4.25.3e is the thermal EMF in microvolts per °C.

4.26 Fungus (see 3.28). Resistors shall be tested in accordance with method 508 of MIL-STD-810.

5. PACKAGING

5.1 Packaging. For acquisition purposes, the packaging requirements shall be as specified in the contract or order (see 6.2). When actual packaging of materiel is to be performed by DoD personnel or in-house contractor personnel, these personnel need to contact the responsible packaging activity to ascertain packaging requirements. Packaging requirements are maintained by the Inventory Control Point's packaging activity within the Military Department or Defense Agency, or within the military service's system commands. Packaging data retrieval is available from the managing Military Department's or Defense Agency's automated packaging files, CD-ROM products, or by contacting the responsible packaging activity.

6. NOTES

(This section contains information of a general or explanatory nature which may be helpful, but is not mandatory.)

6.1 Intended use. The film resistors described herein are intended to be used where high precision and stability are required.

6.2 Ordering data. The contract or purchase order should specify the following:

a. Complete PIN (see 1.2).

b. Requirements for delivery: One copy of the conformance inspection data or certification of compliance that parts have passed conformance inspection with each shipment of parts by the manufacturer.

* c. Whether the manufacturer performs the group B tests or provides certification of compliance with group B requirements (see 4.3.2.1).

d. Requirements for packaging and packing.

e. Circuit reactance requirements.

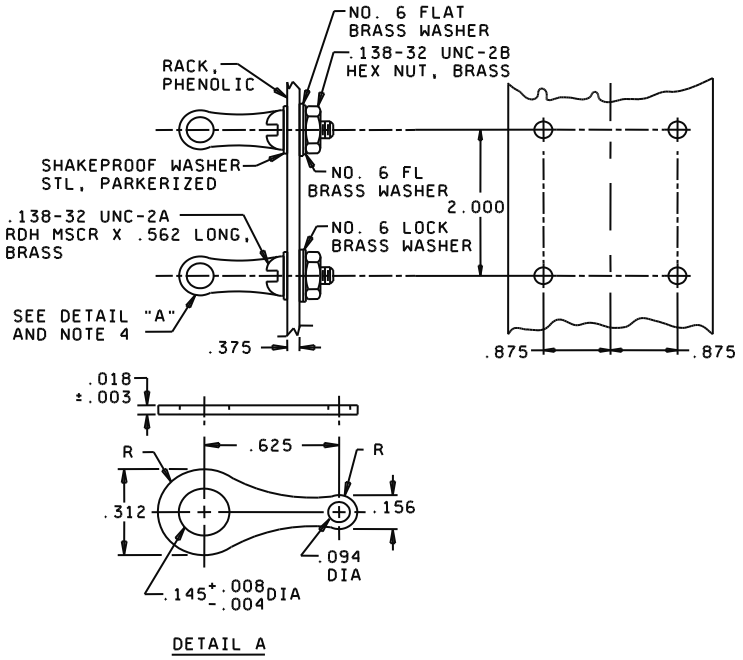

Inches	mm	Inches	mm	Inches	mm	Inches	mm	Inches	mm
.003	0.08	.018	0.46	.145	3.68	.375	9.52	.875	22.22
.004	0.10	.094	2.39	.156	3.96	.562	14.27	2.000	50.80
.008	0.20	.138	3.51	.312	7.92	.625	15.88		

NOTES:
1. Dimensions are in inches.
2. Unless otherwise specified, tolerance is ±.015 (0.38 mm).
3. Metric equivalents are given for general information only.
4. Solder lug, tinned brass in accordance with Catalog No. 2441; Cinch Manufacturing Corporation, Chicago, IL, or equal.

FIGURE 5. Suggested mounting lug arrangement for life test .

6.3 Tin whisker growth. The use of alloys with tin content greater than 97 percent, by mass, may exhibit tin whisker growth problems (see 3.3.1.1) after manufacture. Tin whiskers may occur anytime from a day to years after manufacture and can develop under typical operating conditions, on products that use such materials. Conformal coatings applied over top of a whisker-prone surface will not prevent the formation of tin whiskers. Alloys of 3 percent lead, by mass, have shown to inhibit the growth of tin whiskers. For additional information on this matter, refer to ASTM-B545 (Standard Specification for Electrodeposited Coatings of Tin).

6.4 PIN supersession. The PIN in the original 89099 and revision A and B has been superseded by a new PIN in revision C that omits the circuit reactance code (see 3.3.5). Table VI illustrates a generic PIN substitution.

TABLE VI. PIN supersession.

Revisions through B	Revision C
89088A******VAY	89088A******VY

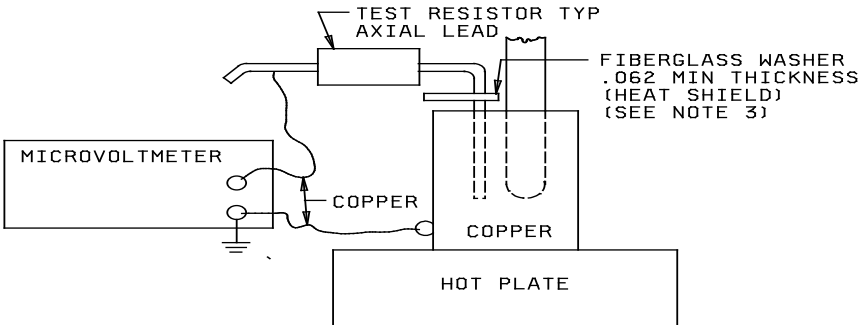

Inches	mm	Inches	mm	Inches	mm	Inches	mm
.002	0.05	.062	1.57	.500	12.70	1.850	46.99
.015	0.38	.180	4.60	1.000	25.40		

NOTES:
1. Dimensions are in inches.
2. Metric equivalents are given for general information only.
3. Centrally located washer on lead inserted in test jig.

FIGURE 6. Thermal EMF test apparatus.

* 6.5 Pulse applications. Designers are CAUTIONED on using the above resistors in high power pulse applications. Since they have not been qualified nor tested for such applications, damage and premature failure are possible.

* 6.6 User of record. Coordination of this document for future revisions is coordinated only with the approved source of supply and the users of record of this document. Requests to be added as a recorded user of this drawing may be achieved online at resistor@dla.mil or in writing to: DLA Land and Maritime, Attn: VAT, Post Office Box 3990, Columbus, OH 43218-3990 or by telephone (614) 692-0552 or DSN 850-0552.

* 6.7 Approved source of supply. Approved source of supply is listed herein. Additional sources will be added as they become available. Assistance in the use of this drawing may be obtained online at resistor@dla.mil or contact DLA Land and Maritime, Attn: VAT, Post Office Box 3990, Columbus, OH 43218-3990 or by telephone (614) 692-0552 or DSN 850-0552.

DLA Land and Maritime drawing PIN	Vendors similar designation or type number 1/	Vendor CAGE	Vendor name and address
89088A********	PTF56-31 Electroplated tin lead terminals	91637	Vishay Dale Electronics, Inc. P.O. Box 609 Columbus, NE 68602-0609
89088B********	PTF56-32 Hot solder dipped terminals		

1/ Parts must be purchased to the DLA Land and Maritime PIN to assure that all performance requirements and tests are met.