REVISIONS			
LTR	**DESCRIPTION**	**DATE**	**APPROVED**
A	Add new source of supply; change temperature coefficient of schematic 08. Editorial changes throughout.	29 May 1992	D. MOORE
B	Changes in accordance with NOR 5905-R013-93.	28 May 1993	D. MOORE
C	Update and validation of drawing. Editorial changes throughout.	11 Sep 2000	K. COTTONGIM
D	Add pure tin prohibition paragraph. Editorial changes throughout.	2 Feb 2007	M. RADECKI
E	QR Code added. Vendor address change. Editorial changes throughout	06 June 2016	M. RADECKI

CURRENT DESIGN ACTIVITY CAGE CODE 037Z3
DEFENSE LOGISTICS AGENCY
DEFENSE SUPPLY CENTER, COLUMBUS
COLUMBUS, OHIO 43218-3990

Prepared in accordance with ASME Y14.100

REV STATUS OF PAGES	**REV**	E	E	E	E	E	E	E	E	E	E	E	E	E	E	E	E
	PAGES	1	2	3	4	5	6	7	8	9	10	11	12	13	14	15	16

PMIC N/A	**PREPARED BY** Alan R. Knox	**DESIGN ACTIVITY:** **DEFENSE ELECTRONIC SUPPLY CENTER DAYTON, OHIO 45444-5000**
Original date of drawing: 11 November 1987	**CHECKED BY** David W. Withrow	**TITLE** RESISTOR NETWORK, FIXED, FILM, 8-PIN SIP, MULTIPLE RESISTANCE VALUES, MULTIPLE SCHEMATICS, (LOW PROFILE)
	APPROVED BY David E. Moore	
	SIZE A / **CODE IDENT. NO. 14933**	**DWG NO. 87073**
	REV E	**PAGE** 1 **OF** 16

1. SCOPE

1.1 Scope. This drawing describes the requirements for an 8-pin, low profile, single-in-line package (SIP), fixed, film, resistor network.

1.2 Part or Identifying Number (PIN). The complete PIN is as follows:

87073	-	01
Drawing number		Schematic number (see figure 2)

2. APPLICABLE DOCUMENTS

2.1 Government documents.

2.1.1 Specifications, standards, and handbooks. The following specifications, standards, and handbooks form a part of this document to the extent specified herein. Unless otherwise specified, the issues of these documents are those cited in the solicitation or contract.

DEPARTMENT OF DEFENSE SPECIFICATIONS

MIL-PRF-83401 - Resistor Network, Fixed, Film, and Capacitor-Resistor Network, Ceramic Capacitor and Fixed Film Resistor, General Specification for.

DEPARTMENT OF DEFENSE STANDARDS

MIL-STD-1285 - Marking of Electrical and Electronic Parts

(Copies of these documents are available online at http://quicksearch.dla.mil).

2.2 Order of precedence. Unless otherwise noted herein or in the contract, in the event of a conflict between the text of this document and the references cited herein (except for related specification sheets), the text of this document takes precedence unless otherwise noted. Nothing in this document, however, supersedes applicable laws and regulations unless a specific exemption has been obtained.

3. REQUIREMENTS

3.1 Item Requirements. The individual item requirements shall be in accordance with MIL-PRF-83401 and as specified herein.

3.2 Interface and physical dimensions. The resistor shall meet the interface and physical dimensions as specified in MIL-PRF-83401 and herein (see figure 1).

3.3 Electrical characteristics.

3.3.1 Resistance. The resistance value shall be as specified on figure 2.

3.3.2 Resistance tolerance. The resistance tolerance shall as specified on figure 2.

3.3.3 Resistor power rating. The resistor power rating for individual resistors shall be 125 milliwatts maximum at 70°C derated to 0 watts at 150°C.

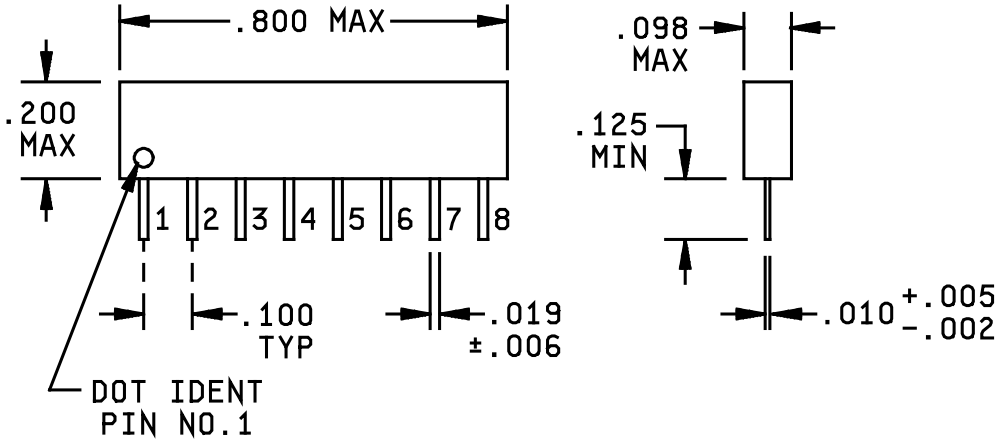

Inches	mm	Inches	mm	Inches	mm
0.002	0.05	0.019	0.48	0.125	3.17
0.005	0.12	0.098	2.48	0.200	5.08
0.006	0.15	0.10	2.54	0.800	20.32
0.010	0.25				

NOTES:
1. Dimensions are in inches.
2. Metric equivalents are given for general information only.
3. Unless otherwise specified, dimensional tolerances shall be ±0.02 (0.5 mm) for two decimal places and ±0.010 (0.25 mm) for three decimal places.
4. The picturization of the styles above is given as representative of the envelope of the item. Slight deviations from the outline shown, which are contained within the envelope and do not alter the functional aspects of the device, are acceptable.

FIGURE 1. Resistor network.

3.3.4 Package power rating. The package power rating shall not exceed the sum of the individual resistance element power rating in the network.

3.3.5 Operating voltage. Each resistor element shall have a maximum operating voltage of 100 V dc or ac rms.

3.3.6 Schematic. Resistor networks are available in schematics listed on figure 2.

3.3.7 Resistance temperature characteristic. Unless otherwise specified, the resistance temperature characteristic shall be ±100 ppm/°C.

3.4 Characteristic. The characteristic shall be in accordance with MIL-PRF-83401, characteristic K.

3.5 Environmental requirements. The environmental requirements shall be in accordance with MIL-PRF-83401, characteristic K.

3.6 Marking. Marking shall be in accordance with MIL-STD-1285 except the networks shall be marked with the PIN as specified herein (see 1.2), the manufacturer's name or Commercial and Government Entity (CAGE) code, and date lot codes.

SCHEMATIC - 01

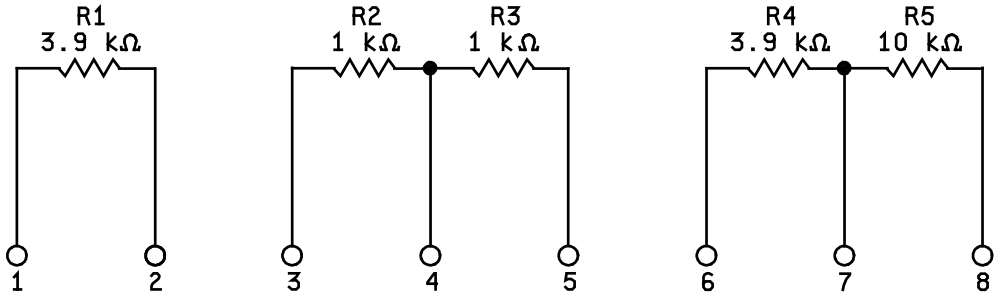

NOTES:
1. Resistance tolerance shall be ±2 percent, except for R5 that shall be ±1 ohm.
2. Ω = ohms, kΩ = kilohms.

SCHEMATIC - 02

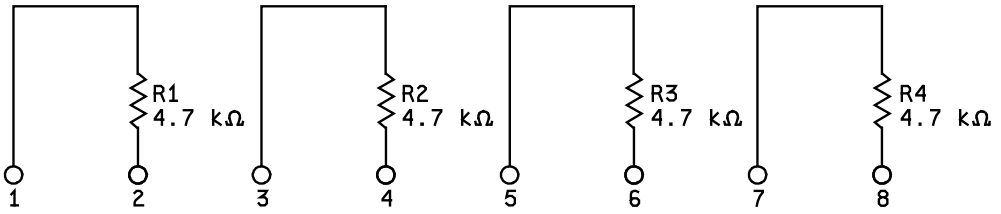

NOTES:
1. Resistance tolerance shall be ±3 percent.
2. Resistor temperature coefficient shall be ±200 ppm/^{O}C.
3. Power rating shall be 30 mW at +120°C.
4. Ω = ohms, kΩ = kilohms.

FIGURE 2. Schematic, resistance and tolerance.

SCHEMATIC - 03

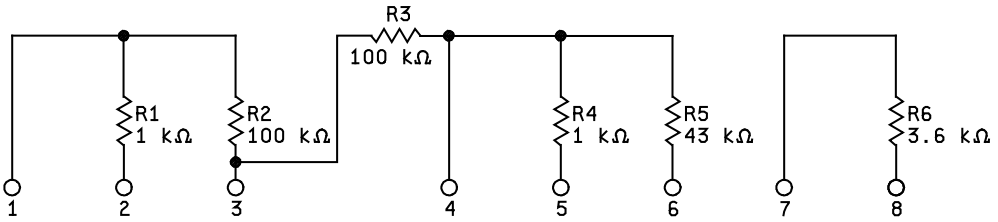

NOTES:
1. Resistance tolerance shall be ±3 percent.
2. Resistor temperature coefficient shall be ±200 ppm/^{O}C.
3. Power rating shall be 30 mW at +120°C.
4. Ω = ohms, kΩ = kilohms.

SCHEMATIC - 04

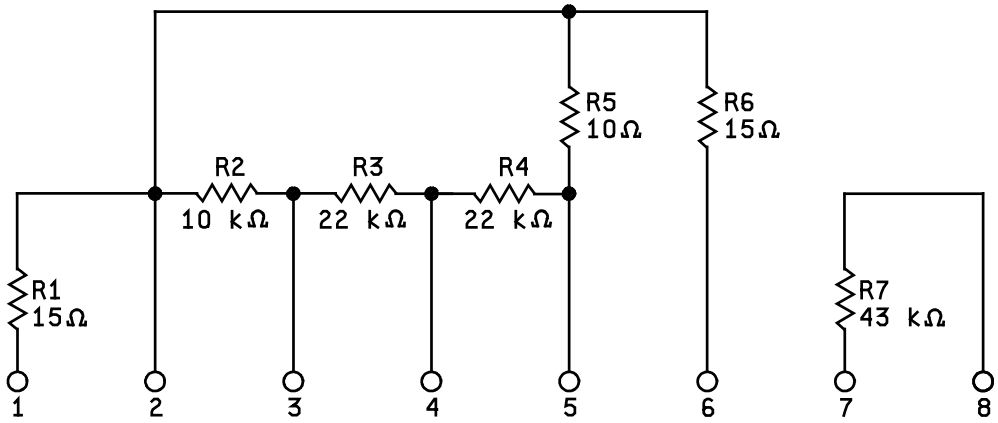

NOTES:
1. Resistance tolerance shall be ±3 percent.
2. Resistor temperature coefficient shall be ±200 ppm/^{O}C.
3. R1 and R6 power rating shall be 60 mW at +120°C. R2, R3, R4, R5 and R7 power ratings shall be 25 mW at +120°C.
4. Ω = ohms, kΩ = kilohms.

FIGURE 2. Schematic, resistance and tolerance - Continued.

SCHEMATIC - 05

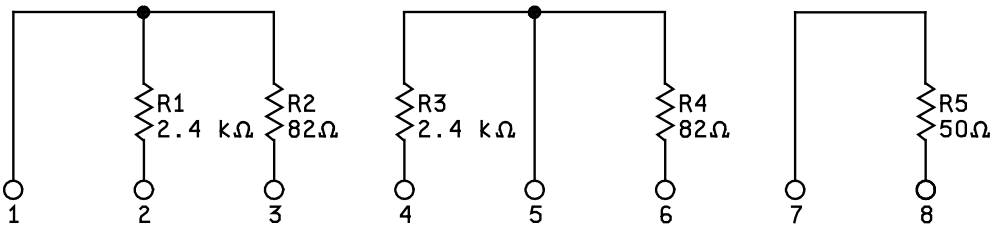

NOTES:
1. Resistance tolerance shall be ±3 percent.
2. Resistor temperature coefficient shall be ±200 ppm/^{O}C maximum.
3. R2, R4 and R5 power ratings shall be 60 mW at +120°C. R1 and R3 power rating shall be 25 mW at +120°C.
4. Ω = ohms, kΩ = kilohms.

SCHEMATIC - 06

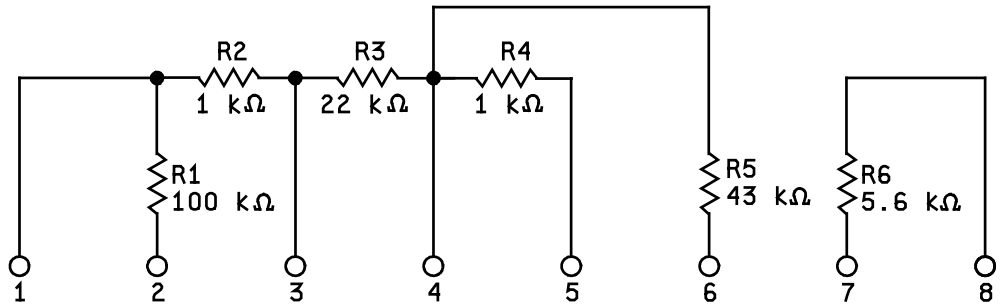

NOTES:
1. Resistance tolerance shall be ±3 percent.
2. Resistor temperature coefficient shall be ±200 ppm/^{O}C maximum.
3. Power rating shall be 30 mW at +120°C.
4. kΩ = kilohms.

FIGURE 2. Schematic, resistance and tolerance - Continued.

SCHEMATIC - 07

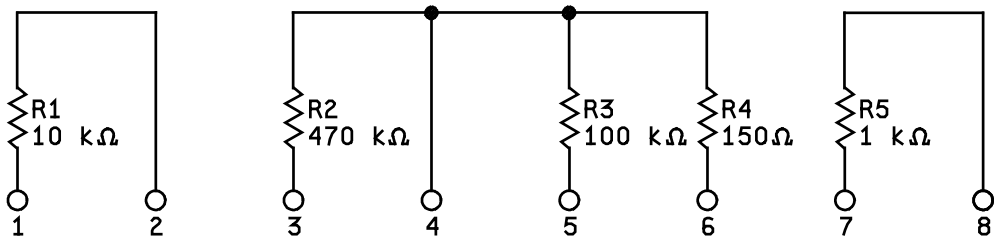

NOTES:
1. Resistance tolerance shall be ±3 percent.
2. Resistor temperature coefficient shall be ±200 ppm/^{O}C maximum.
3. R4 power rating shall be 60 mW at +120°C. R1, R2, R3 and R5 power ratings shall be 25 mW at +120°C.
4. Ω = ohms, kΩ = kilohms.

SCHEMATIC - 08

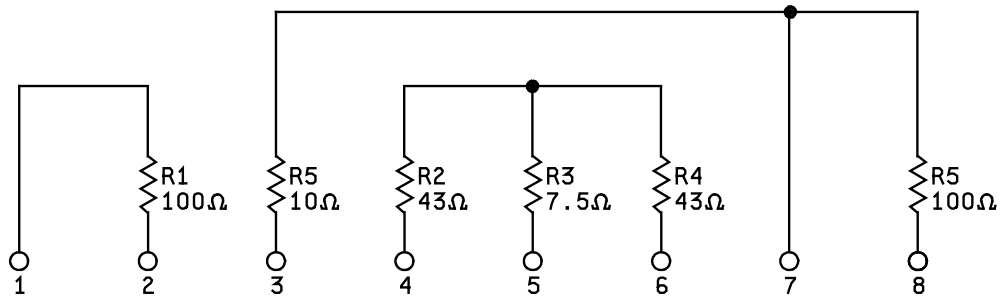

NOTES:
1. Resistance tolerance shall be ±2 percent.
2. Resistor temperature coefficient shall be ±100 ppm/^{O}C maximum.
3. R1 and R2 power rating shall be 250 mW at +70°C, R3 power ratings shall be 50 mW at +70°C, R4 power ratings shall be 20 mW at +70°C, R5 power ratings shall be 150 mW at +70°C, and R6 power ratings shall be 100 mW at +70°C.
4. Ω = ohms.

FIGURE 2. Schematic, resistance and tolerance - Continued.

SCHEMATIC - 09

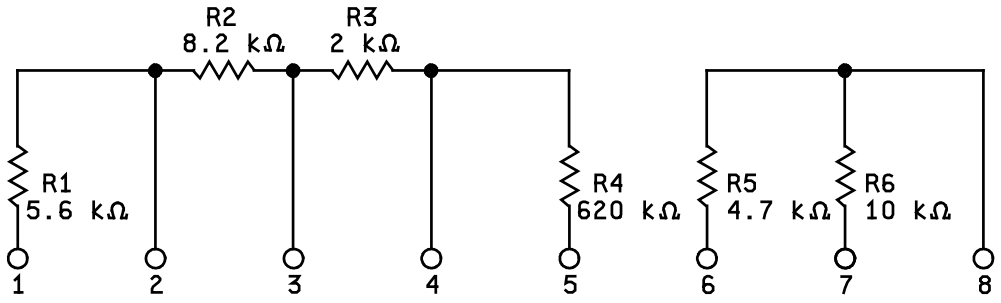

NOTES:
1. Resistance tolerance shall be ±2 percent.
2. Resistor temperature coefficient shall be ±200 ppm/^{O}C maximum.
3. Power rating shall be 25 mW at +120°C.
4. kΩ = kilohms.

SCHEMATIC - 10

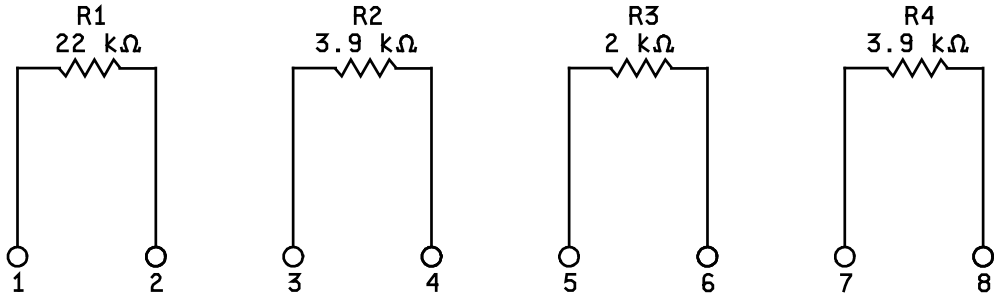

NOTES:
1. Resistance tolerance shall be ±3 percent.
2. Resistor temperature coefficient shall be ±200 ppm/^{O}C maximum.
3. Power rating shall be 25 mW at +120°C.
4. Ω = ohms, kΩ = kilohms.

FIGURE 2. Schematic, resistance and tolerance - Continued.

SCHEMATIC - 11

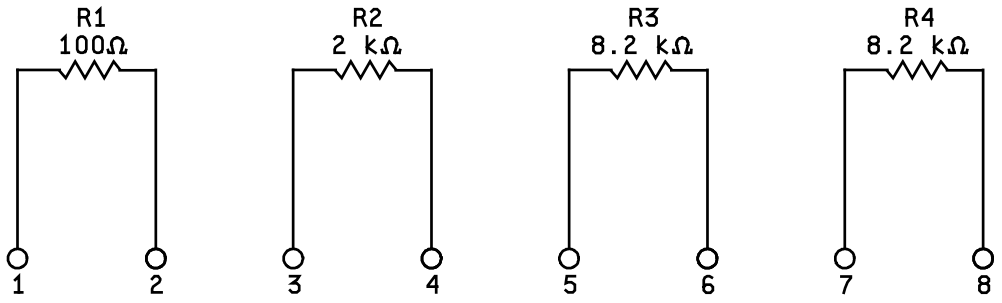

NOTES:
1. Resistance tolerance shall be ±3 percent.
2. Resistor temperature coefficient shall be ±200 ppm/^{O}C maximum.
3. Power rating shall be 25mW at +120°C.
4. Ω = ohms, kΩ = kilohms.

SCHEMATIC - 12

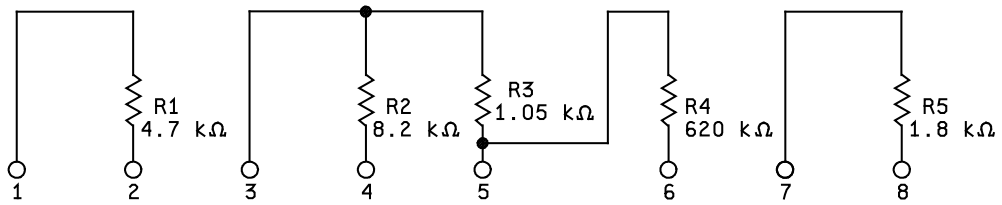

NOTES:
1. Resistance tolerance shall be ±3 percent.
2. Resistor temperature coefficient shall be ±200 ppm/^{O}C maximum.
3. Power rating shall be 40 mW at +120°C.
4. kΩ = kilohms.

FIGURE 2. Schematic, resistance and tolerance - Continued.

SCHEMATIC - 13

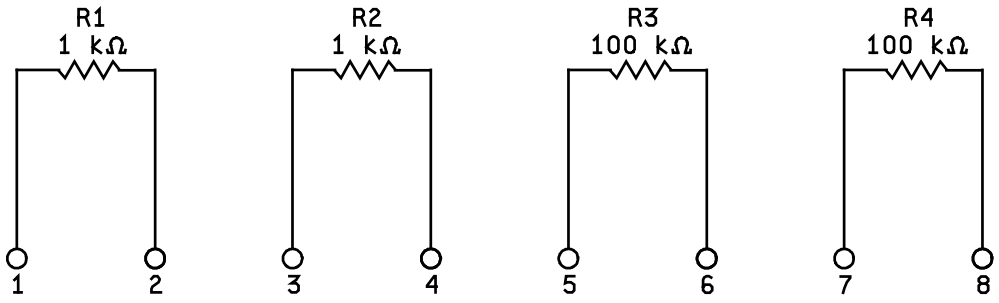

NOTES:
1. Resistance tolerance shall be ±5 percent.
2. kΩ = kilohms.

SCHEMATIC - 14

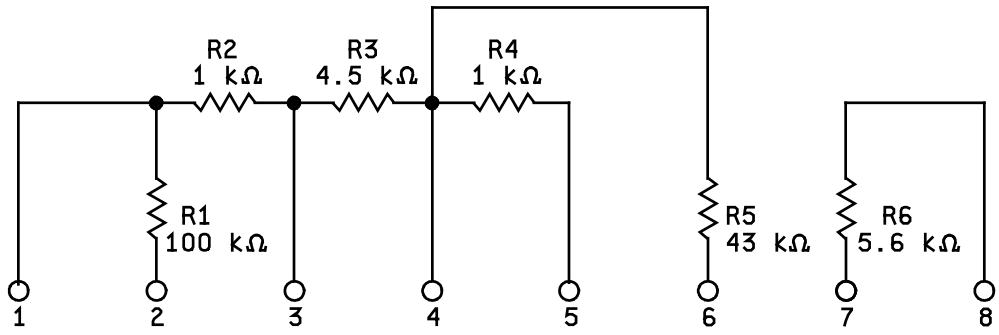

NOTES:
1. Resistance tolerance shall be ±3 percent.
2. Resistor temperature coefficient shall be ±200 ppm/^{O}C maximum.
3. Power rating shall be 30 mW at +120°C.
4. kΩ = kilohms.

FIGURE 2. Schematic, resistance and tolerance - Continued.

SCHEMATIC - 15

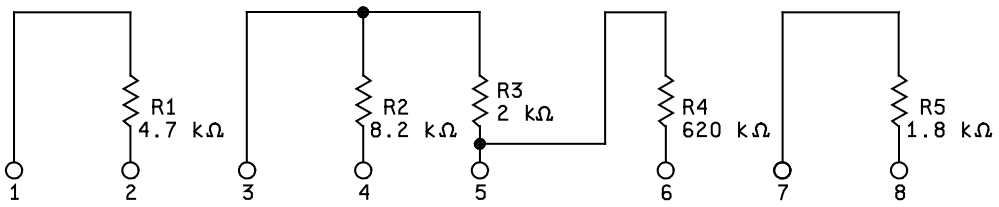

NOTES:
1. Resistance tolerance shall be ±3 percent.
2. Resistor temperature coefficient shall be ±200 ppm/^{O}C maximum.
3. Power rating shall be 40 mW at +120°C.
4. kΩ = kilohms.

SCHEMATIC - 16

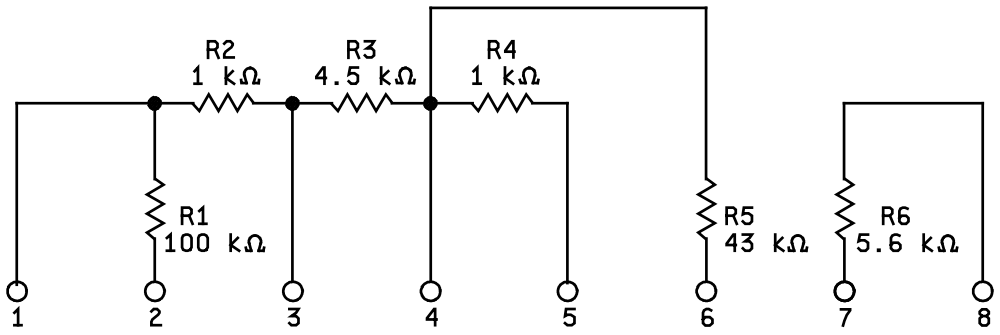

NOTES:
1. Resistance tolerance shall be ±3 percent.
2. Resistor temperature coefficient shall be ±200 ppm/^{O}C maximum.
3. Power rating shall be 30 mW at +120°C.
4. Ω = ohms, kΩ = kilohms.

FIGURE 2. Schematic, resistance and tolerance - Continued.

SCHEMATIC - 17

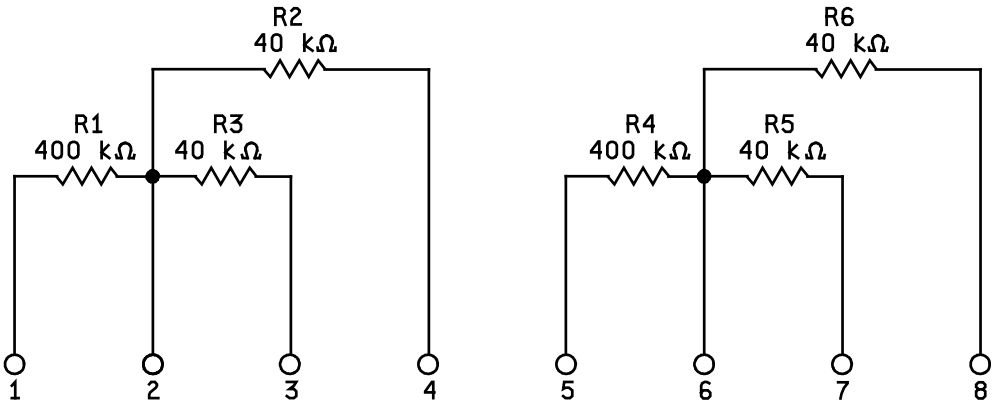

NOTES:
1. Resistance tolerance shall be ±2 percent.
2. Resistor temperature coefficient shall be ±150 ppm/^{O}C maximum.
3. kΩ = kilohms.

SCHEMATIC - 18

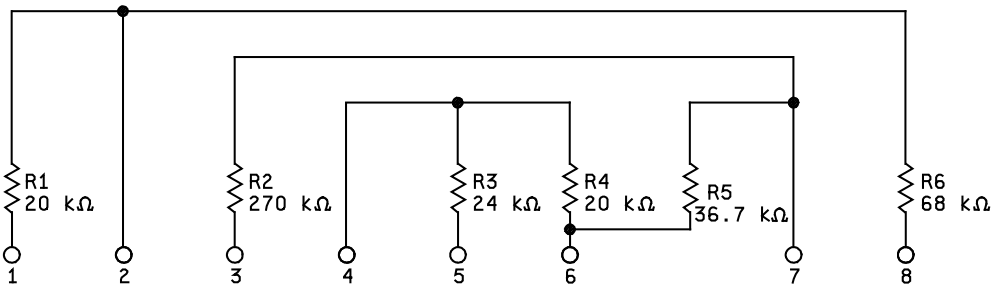

NOTES:
1. Resistance tolerance shall be ±2 percent.
2. kΩ = kilohms.

FIGURE 2. Schematic, resistance and tolerance - Continued.

SCHEMATIC - 19

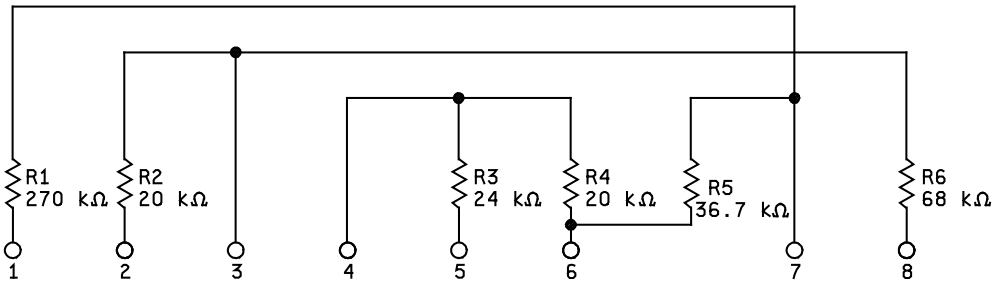

NOTES:
1. Resistance tolerance shall be ±2 percent.
2. kΩ = kilohms.

SCHEMATIC - 20

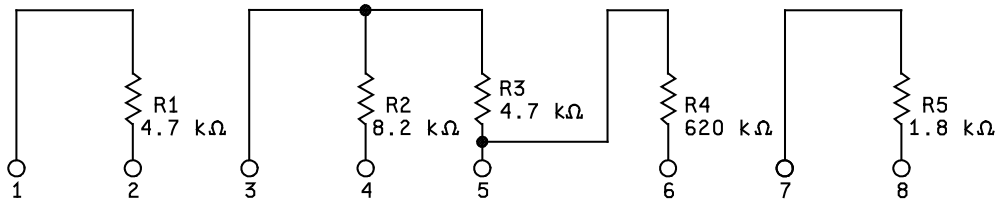

NOTES:
1. Resistance tolerance shall be ±3 percent.
2. Resistor temperature coefficient shall be ±200 ppm/^{O}C maximum.
3. Power rating shall be 40 mW at +120°C.
4. Ω = ohms, kΩ = kilohms.

FIGURE 2. Schematic, resistance and tolerance - Continued.

SCHEMATIC - 21

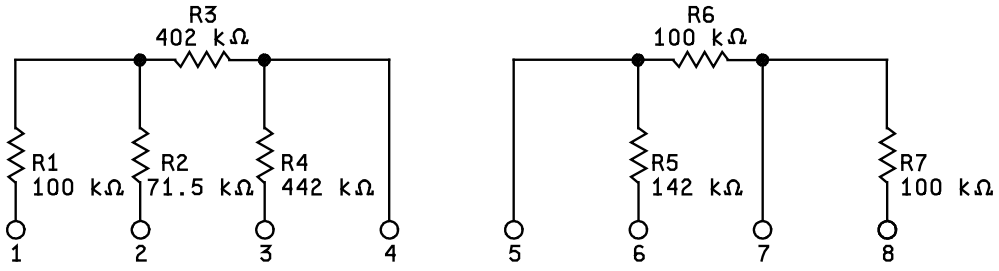

NOTES:

1. R7 resistance tolerance shall be ±5 percent. R1through R6 resistance tolerance shall be ±2 percent.
2. The R1/R2 ratio tolerance shall be 1.399 ±1 percent; tracking shall be 50 ppm/°C maximum.
3. The R4/R3 ratio tolerance shall be 1.100 ±1 percent; tracking shall be 50 ppm/°C maximum.
4. The R5/R6 ratio tolerance shall be 1.420 ±1 percent; tracking shall be 50 ppm/°C maximum.
5. kΩ = kilohms.

FIGURE 2. Schematic, resistance and tolerance - Continued.

3.7 Manufacturer eligibility. To be eligible for listing as an approved source of supply, a manufacturer shall be listed on the MIL-PRF-83401 Qualified Products List for at least one part, or perform the group A and group B inspections specified herein on a sample of parts agreed upon by the manufacturer and DLA Land and Maritime - VAT.

3.7.1 Certificate of compliance. A certificate of compliance shall be required from manufacturers requesting to be a approved source of supply.

3.8 Pure tin. The use of pure tin, as an underplate or final finish, is prohibited both internally and externally. Tin content of resistor components and solder shall not exceed 97 percent, by mass. Tin shall be alloyed with a minimum of 3 percent lead, by mass (see 6.3).

3.9 Recycled, recovered, environmentally preferable, or biobased materials. Recycled, recovered, environmentally preferable, or biobased materials should be used to the maximum extent possible, provided that the material meets or exceeds the operational and maintenance requirements, and promotes economically advantageous life cycle costs.

3.10 Workmanship. Resistors shall be uniform in quality and free from defects that will affect life, serviceability, or appearance.

4. VERIFICATION

4.1 Qualification inspection. Qualification inspection is not applicable to this document.

4.2 Conformance inspections.

4.2.1 Inspection of product for delivery. Inspection of product for delivery shall consist of group A and group B inspections of MIL-PRF-83401.

4.2.2 Certification. The acquiring activity, at its discretion, may accept a certificate of compliance with group B requirements in lieu of performing group B tests (see 6.2d).

4.3 Inspection of packaging. Inspection of packaging shall be in accordance with MIL-PRF-83401.

4.4 Visual and mechanical examination. Resistors shall be examined to verify that the materials, design, construction, physical dimensions, marking, and workmanship are in accordance with the applicable requirements of MIL-PRF-83401.

5. PACKAGING

5.1 Packaging. For acquisition purposes, the packaging requirements shall be as specified in the contract or order (see 6.2). When packaging of materiel is to be performed by DoD or in-house contractor personnel, these personnel need to contact the responsible packaging activity to ascertain requisite packaging requirements. Packaging requirements are maintained by the Inventory Control Point's packaging activity within the Military Department or Defense Agency, or within the Military Department's Services System Command. Packaging data retrieval is available from the managing Military Department's or Defense Agency's automated packaging files, CD-ROM products, or by contacting the responsible packaging activity.

6. NOTES

(This section contains information of a general or explanatory nature that may be helpful, but is not mandatory.)

6.1 Intended use. Resistor networks are used in surface mounting applications where space is a major concern.

6.2 Ordering data. The contract or purchase order should specify the following:

a. Complete PIN (see 1.2).

b. Requirements for delivery: One copy of the conformance inspection data or certification of compliance that parts have passed conformance inspection with each shipment of parts by the manufacturer.

c. Requirements for packaging and packing. (i.e. ESD sensitive packaging).

d. Whether the manufacturer performs the group B tests or provides certification of compliance with group B requirements.

6.3 Electrostatic charge. Under several combinations of conditions, these resistors can be electrically damaged, by electrostatic charges, and drift from specified value. Users should consider this phenomena when ordering or shipping resistors. Direct shipment to the Government is controlled by MIL-DTL-39032 which specifies a preventive packaging procedure.

6.4 Tin whisker growth. The use of alloys with tin content greater than 97 percent, by mass, may exhibit tin whisker growth problems after manufacture. Tin whiskers may occur anytime from a day to years after manufacture and can develop under typical operating conditions, on products that use such materials. Conformal coatings applied over top of a whisker-prone surface will not prevent the formation of tin whiskers. Alloys of 3 percent lead, by mass, have shown to inhibit the growth of tin whiskers. For additional information on this matter, refer to ASTM-B545 (Standard Specification for Electrodeposited Coatings of Tin).

6.5 User of record. Coordination of this document for future revisions is coordinated only with the approved source of supply and the users of record of this document. Requests to be added as a recorded user of this drawing may be achieved online at resistor@dla.mil or in writing to: DLA Land and Maritime-VAT, Post Office Box 3990, Columbus, OH 43218-3990 or by telephone (614) 692-8754 or DSN 850-8754.

6.6 Approved source of supply. Approved source of supply is listed herein. Additional sources will be added as they become available. Assistance in the use of this drawing may be obtained online at resistor@dla.mil or contact DLA Land and Maritime-VAT, Post Office Box 3990, Columbus, OH 43218-3990 or by telephone (614) 692-8754 or DSN 850-8754.

DLA Land and Maritime drawing PIN	Vendors similar designation or type number 1/	Vendor CAGE	Vendor's name and address
87073-**	8SM-****-F*	91637	Vishay Techno P.O. Box 609, 1122 23rd St., Columbus, NE 68602-0609 http://www.vishay.com/
87073-** All schematics except 21	MSP 08		Vishay Dale P.O. Box 609, 1122 23rd St., Columbus, NE 68602-0609 http://www.vishay.com/

1/ Parts must be purchased to the DLA Land and Maritime PIN to assure that all performance requirements and test are met.