REVISIONS			
LTR	**DESCRIPTION**	**DATE**	**APPROVED**
A	Corrected table II and modified part number requirements.	28 Jan 88	Randy Larson
B	Changes in accordance with NOR 5925-E052.	22 Aug 00	Kendall Cottongim
C	Delete part number and substitute PIN, editorial changes, update to latest DSCC drawing format.	25 Apr 03	Kendall Cottongim
D	Added a high-inrush circuit breaker choice.	21 June 05	Kendall Cottongim
E	Update the approved source of supply to reflect Sensata Technologies, Incorporated and update to the latest DSCC drawing format. Editorial changes throughout.	25 Nov 08	Michael Radecki
F	Update to latest DLA Land and Maritime drawing format.	7 Apr 15	Michael Radecki

CURRENT DESIGN ACTIVITY CAGE CODE 037Z3
DEFENSE LOGISTICS AGENCY
LAND AND MARITIME
COLUMBUS, OHIO 43218-3990

Prepared in accordance with ASME Y14.100

REV																						
PAGE																						
REV																						
PAGE																						
REV STATUS OF PAGES	**REV**		F	F	F	F	F	F	F	F	F	F	F	F	F	F	F	F				
	PAGES		1	2	3	4	5	6	7	8	9	10	11	12	13	14	15	16				

PMIC N/A	**PREPARED BY** Dan McGrath	**DESIGN ACTIVITY** **DEFENSE ELECTRONIC SUPPLY CENTER** **DAYTON, OH 45444-5000**
Original date of drawing 31 Aug 1987	**CHECKED BY** Dan McGrath **APPROVED BY** D. E. Morgan	**TITLE** CIRCUIT BREAKERS, MAGNETIC, PANEL SEAL, SHOCK ENHANCED, TRIP-FREE, SERIES TRIP, TWO POLE (0.2 TO 30 AMPERES)
	SIZE A / **CODE IDENT. NO. 14933**	**DWG NO.** **87061**
	REV F	**PAGE** 1 **OF** 16

1. SCOPE

1.1 Scope. This drawing describes the requirements for a family of circuit breakers with shock enhancement for use in overcurrent protection.

1.2 Part or Identifying Number (PIN). The complete PIN shall be as follows:

For pole identification, see figures 1, 2, and 3

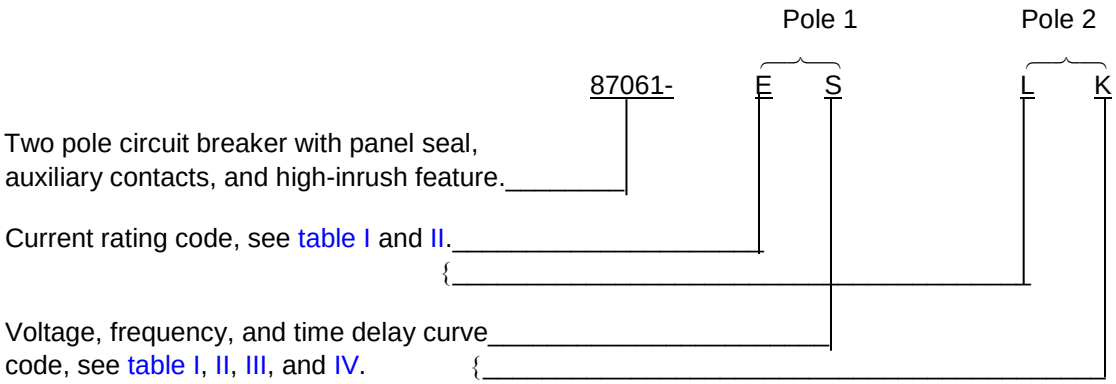

Equipment manufacturers who do not require auxiliary contacts in specific production application may order circuit breakers without this feature by modifying the prefix as "87061A-". When circuit breakers without auxiliary contacts are installed in new equipment, replacement spares should possess auxiliary contacts since it is more economic for the DOD to stock one version of this item in lieu of two. Therefore, stock numbers should not be requested (or assigned) for these special PINs.

For circuit breakers that require an adapter plate (see configuration B) and auxiliary contacts, the prefix shall be modified as "87061P-". For circuit breakers that require an adapter plate without auxiliary contacts, the prefix can be modified as "87061N-". Replacement spares requiring an adapter should also possess auxiliary contacts.

For high-inrush circuit breakers (configuration C) that require auxiliary contacts, the prefix shall be modified as “87061G-“. For high-inrush circuit breakers (configuration C) that do not require auxiliary contacts, the prefix shall be modified as “87061H-“.

If poles have identical current ratings, code letters will repeat for each pole. If poles are not identical, poles 1 and 2 respectively (see figures 1 and 2) shall be coded in ascending order of the current rating code letter. If poles have identical current ratings but different voltage, frequency and time delay code letters, then these code letters shall be coded in ascending order.

2. APPLICABLE DOCUMENTS

2.1 General. The documents listed in this section are specified in sections 3 and 4 of this specification. This section does not include documents cited in other sections of this specification or recommended for additional information or as examples. While every effort has been made to ensure the completeness of this list, document users are cautioned that they must meet all specified requirements of documents in sections 3 and 4 of this specification, whether or not they are listed.

2.2 Government documents.

2.2.1 Specifications, standards, and handbooks. The following specifications, standards, and handbooks form a part of this document to the extent specified herein. Unless otherwise specified, the issues of these documents are those cited in the solicitation or contract.

DEPARTMENT OF DEFENSE SPECIFICATIONS

MIL-PRF-55629 - Circuit Breakers, Magnetic, Unsealed or Panel Seal, Trip-Free, General Specification for.

(Copies of this document is available online at http://quicksearch.dla.mil.)

2.3 Non-Government publications. The following documents form a part of this document to the extent specified herein. Unless otherwise specified, the issues of these documents are those cited in the solicitation or contract.

AMERICAN SOCIETY FOR TESTING AND MATERIALS (ASTM)

ASTM B545 - Standard Specification for Electrodeposited Coatings of Tin.

(Copies of this document are available online at http://www.astm.org/.

NATIONAL AEROSPACE STANDARDS (NAS)

NASM3212 - Screws, Machine, Pan Head, Cross-Recessed, Self-Sealing, Integral Silicone O-Ring, Plain And Self-Locking.

NASM35338 - Washer, Lock-Spring, Helical, Regular (Medium) Series.

(Copies of these documents are available online at http://www.aia-aerospace.org/.

2.4 Order of precedence. Unless otherwise noted herein or in the contract, in the event of a conflict between the text of this document and the references cited herein (except for related specification sheets), the text of this document takes precedence. Nothing in this document, however, supersedes applicable laws and regulations unless a specific exemption has been obtained.

3. REQUIREMENTS

3.1 Interface and physical dimensions. The interface and physical dimensions shall be as specified herein (see table I, II, III, IV, and figure 1 (configuration A), figure 2 (configuration B), and figure 3 (configuration C)).

3.2 Voltage and frequency rating. See table I and table III (configurations A and B) and table II and table IV (configuration C).

3.3 Current rating. See table I (configurations A and B) and table II (configuration C).

3.4 Time delay. Time delay shall be in accordance with table I and table III (configurations A and B) and table II and table IV (configuration C).

3.5 Shock.

3.5.1 Shock (100 g's). When circuit breakers are tested as specified in 4.2.1, main circuit breaker contacts shall not trip. There shall be no closing of open main or auxiliary contacts, nor opening of closed main or auxiliary contacts in excess of 10 μs duration, nor shall there be any evidence of mechanical or electrical damage.

3.5.2 Shock (150 g's). When circuit breakers are tested as specified in 4.2.2, the main circuit breaker contacts shall not trip. There shall be no evidence of mechanical or electrical damage.

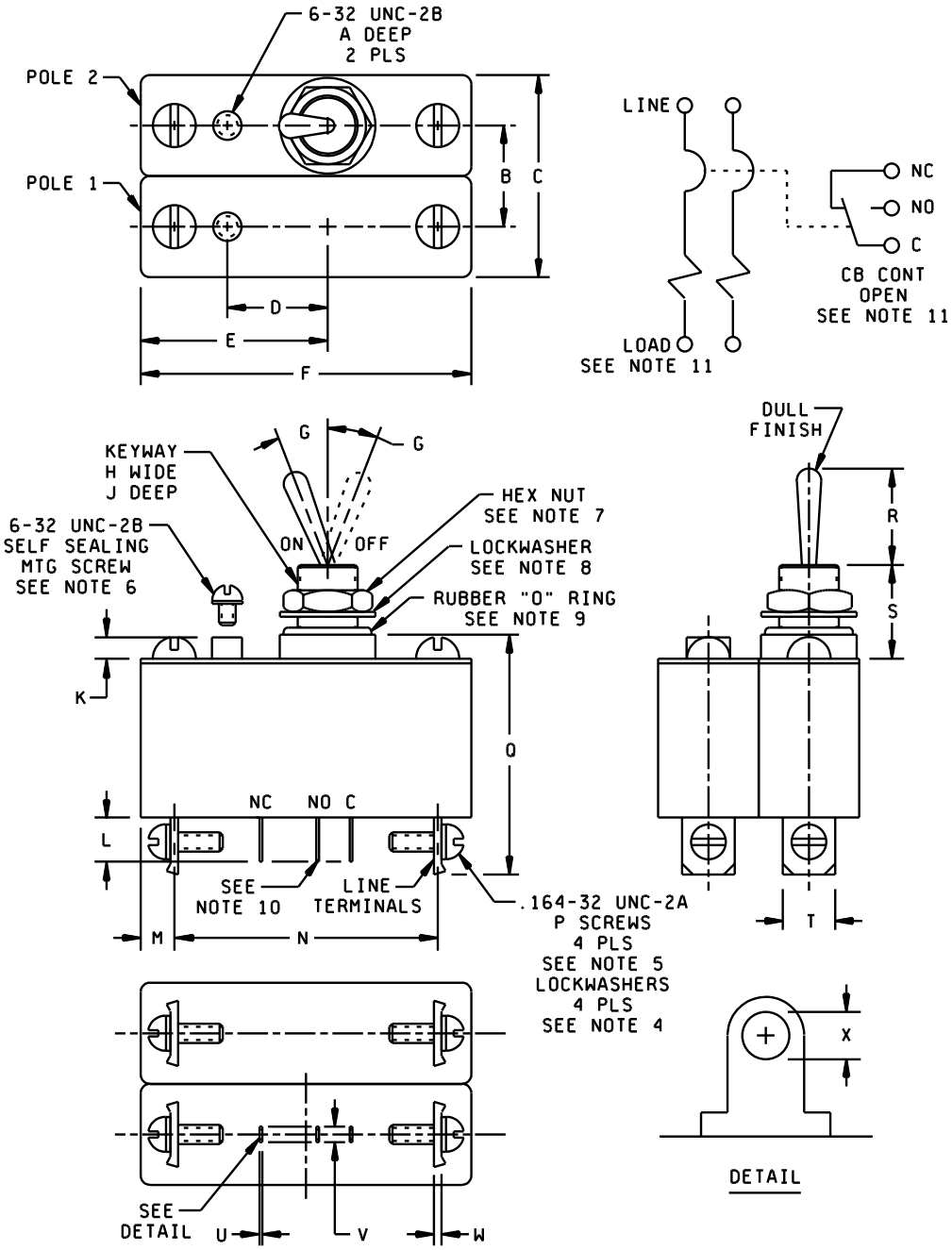

FIGURE 1. Interface and physical dimensions (configuration A).

DEFENSE ELECTRONIC SUPPLY CENTER DAYTON, OHIO	SIZE **A**	CODE IDENT NO. **14933**	DWG NO. **87061**
		REV F	PAGE 4

Ltr	Inches		mm	
	Min	Max	Min	Max
A	.157	.219	3.99	5.56
B	.735	.765	18.67	19.43
C	---	1.515	---	38.48
D	.641	.671	16.28	17.04
E	1.189	1.251	30.20	31.78
F	1.969	2.031	50.01	51.59
G	10°	16°	10°	16°
H	.060	.065	1.52	1.65
J	.030	.035	0.76	0.89
K	.115	.145	2.92	3.68
L	.343 REF		8.71 REF	
M	.199	.261	5.05	6.63
N	1.499	1.561	38.07	39.65
P	.156	.218	3.96	5.54
Q	---	2.232	---	56.69
R	.719	.781	18.26	19.83
S	.594	.656	15.09	16.66
T	.365	.395	9.27	10.03
U	.020 REF		0.51 REF	
V	.110 REF		2.79 REF	
W	.030	.035	0.76	0.89
X	.050 REF		1.27 REF	

NOTES:

1. Dimensions are in inches.
2. Metric equivalents are given for general information only.
3. Unless otherwise specified, tolerance is ±.031 (0.79 mm).
4. Lockwasher: Split, number 8 NASM35338-137.
5. Terminal screw, number 8, .164-32 UNC-2A, .187 ± .015 long, material: Brass, tin-plated (ASTM B545).
6. Passivated: Corrosion resisting steel screw - slotted head with integral O-ring, may be replaced by the NASM3212-12 with cross-recessed head.
7. Hex mounting nut .500-32 UN-2B thread, .625 ± .010 across flats, .120/.125 thick, brass nickel plated, SAE-AMS-QQ-N-290 nonglare; may be replaced with MS25082-B22.
8. Internal tooth lockwasher, .625 ± .005 O. D., .510 ± .005 I. D., .028 ± .005 thick, stainless steel.
9. O-ring, material, butadiene acrylonitrite or silicone rubber.
10. Auxiliary switch terminals shall provide for soldered connections.
11. Physical item marking of the words "LOAD: and "CB continue open" is optional.

FIGURE 1. Interface and physical dimensions (configuration A) - Continued.

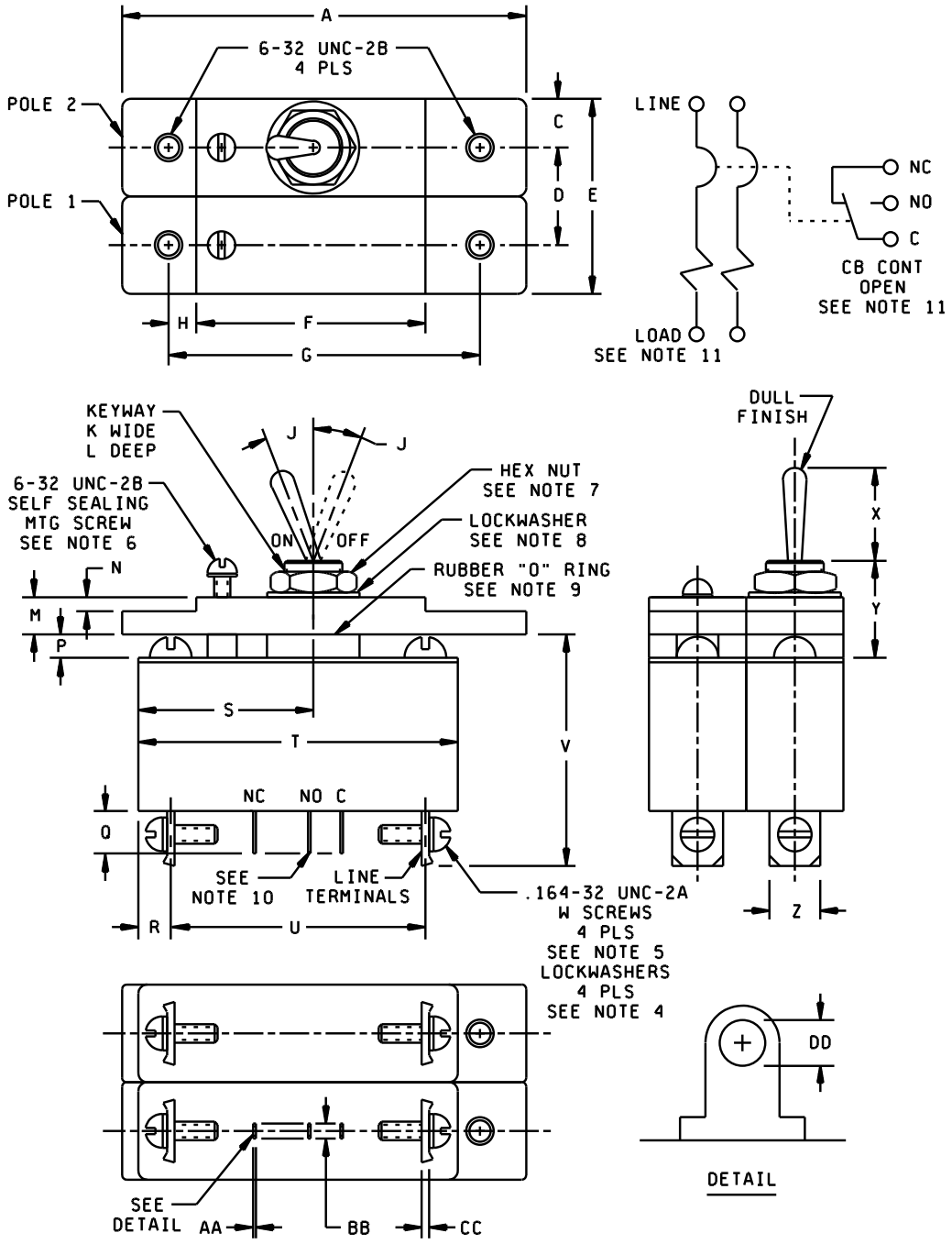

FIGURE 2. Interface and physical dimensions (configuration B).

DEFENSE ELECTRONIC SUPPLY CENTER DAYTON, OHIO	SIZE **A**	CODE IDENT NO. **14933**	DWG NO. **87061**
		REV F	PAGE 6

Ltr	Inches		mm	
	Min	Max	Min	Max
A	---	2.510	---	63.75
C	.359	.391	9.12	9.93
D	.735	.765	18.67	19.43
E	---	1.515	---	38.48
F	1.420	1.470	36.07	37.34
G	2.046	2.078	51.97	52.78
H	.149	.211	3.78	5.36
J	10°	16°	10°	16°
K	.060	.065	1.52	1.65
L	.030	.035	0.76	0.89
M	.281	.343	7.14	8.71
N	.097	.159	2.46	4.04
P	.115	.145	2.92	3.68
Q	.343 REF		8.71 REF	
R	.199	.261	5.05	6.63
S	1.189	1.251	30.20	31.78
T	1.969	2.031	50.01	51.59
U	1.499	1.561	38.07	39.65
V	---	2.232	---	56.69
W	.156	.218	3.96	5.54
X	.719	.781	18.26	19.84
Y	.594	.656	15.09	16.66
Z	.365	.395	9.27	10.03
AA	.020 REF		0.51 REF	
BB	.110 REF		2.79 REF	
CC	.030	.035	0.76	0.89
DD	.050 REF		1.27 REF	

NOTES:

1. Dimensions are in inches.
2. Metric equivalents are given for general information only.
3. Unless otherwise specified, tolerance is ±.031 (0.79 mm).
4. Lockwasher: Split, number 8 NASM35338-137.
5. Terminal screw, number 8, .164-32 UNC-2A, .187 ± .015 long, material: Brass, tin-plated (ASTM B545).
6. Passivated: Corrosion resisting steel screw - slotted head with integral O-ring, may be replaced by the NASM3212-12 with cross-recessed head.
7. Hex mounting nut .500-32 UN-2B thread, .625 ± .010 across flats, .120/.125 thick, brass nickel plated, SAE-AMS-QQ-N-290 nonglare; may be replaced with MS25082-B22.
8. Internal tooth lockwasher, .625 ± .005 O. D., .510 ± .005 I. D., .028 ± .005 thick, stainless steel.
9. O-ring, material, butadiene acrylonitrite or silicone rubber.
10. Auxiliary switch terminals shall provide for soldered connections.
11. Physical item marking of the words "LOAD: and "CB continue open" is optional.

FIGURE 2. Interface and physical dimensions (configuration B) - Continued.

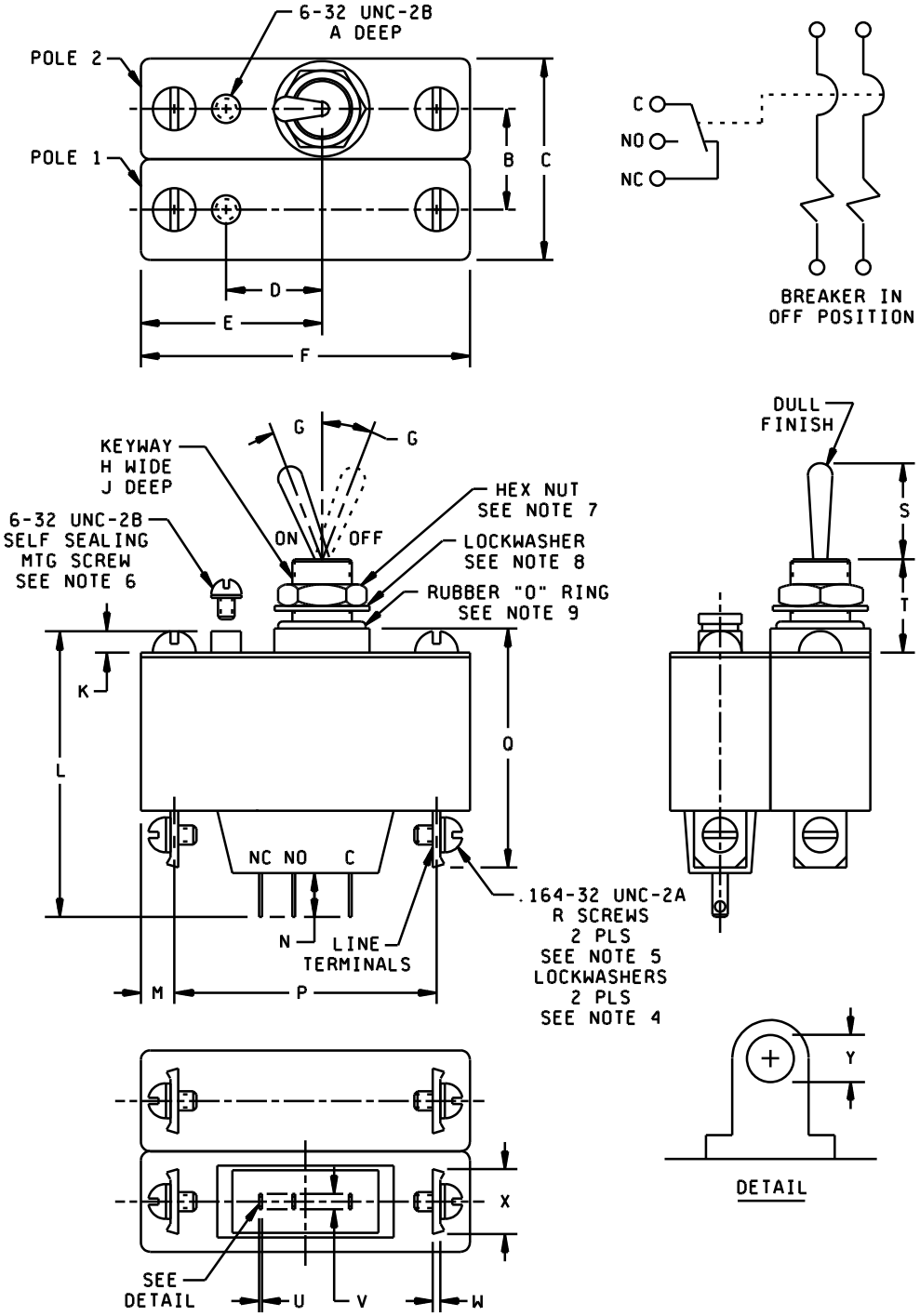

FIGURE 3. Interface and physical dimensions (configuration C).

DEFENSE ELECTRONIC SUPPLY CENTER DAYTON, OHIO	SIZE **A**	CODE IDENT NO. **14933**	DWG NO. **87061**
		REV F	PAGE 8

Ltr	Inches		mm	
	Min	Max	Min	Max
A	.119	.181	3.02	4.60
B	.735	.765	18.67	19.43
C	---	1.515	---	38.48
D	.641	.671	16.28	17.12
E	1.189	1.251	30.20	31.78
F	1.969	2.031	50.01	51.59
G	10°	16°	10°	16°
H	.060	.065	1.52	1.65
J	.030	.035	0.76	0.89
K	.115	.145	2.92	3.68
L	---	2.620	---	66.55
M	.199	.261	5.05	6.63
N	.264	.326	6.71	8.28
P	1.499	1.561	38.07	39.65
Q	---	2.256	---	57.30
R	.156	.218	3.96	5.54
S	.719	.781	18.26	19.84
T	.594	.656	15.09	16.66
U	.020 REF		0.51 REF	
V	.110 REF		2.79 REF	
W	.030	.035	0.76	0.89
X	.344	.406	8.74	10.31
Y	.050 REF		1.27 REF	

NOTES:

1. Dimensions are in inches.
2. Metric equivalents are given for general information only.
3. Unless otherwise specified, tolerance is ±.031 (0.79 mm).
4. Lockwasher: Split, number 8 NASM35338-137.
5. Terminal screw, number 8, .164-32 UNC-2A, .187 ± .015 long, material: Brass, tin-plated (ASTM B545).
6. Passivated: Corrosion resisting steel screw - slotted head with integral O-ring, may be replaced by the NASM3212-12 with cross-recessed head.
7. Hex mounting nut .500-32 UN-2B thread, .625 ± .010 across flats, .120/.125 thick, brass nickel plated, SAE-AMS-QQ-N-290 nonglare; may be replaced with MS25082-B22.
8. Internal tooth lockwasher, .625 ± .005 O. D., .510 ± .005 I. D., .028 ± .005 thick, stainless steel.
9. O-ring, material, butadiene acrylonitrite or silicone rubber.
10. Auxiliary switch terminals shall provide for soldered connections.
11. Physical item marking of the words "LOAD: and "CB continue open" is optional.

FIGURE 3. Interface and physical dimensions (configuration C) - Continued.

TABLE I. PIN code letters and parameters (configuration A and B).

Current rating		Voltage frequency and tripping time delay code letter from table III	Resistance or impedance ohms (max)	Current rating		Voltage frequency and tripping time delay code letter from table III	Resistance or impedance ohms (max)
(Amperes)	Code letter			(Amperes)	Code letter		
0.1	A	K or L	120 at dc	4.0	K	K or L	.1 at dc
0.1	A	M or N	120 at 60 Hz	4.0	K	M or N	.1 at 60 Hz
0.1	A	P, R, or S	350 at 400 Hz	4.0	K	P, R, or S	.3 at 400 Hz
0.250	B	K or L	21 at dc	5.0	L	K or L	.08 at dc
0.250	B	M or N	23 at 60 Hz	5.0	L	M or N	.08 at 60 Hz
0.250	B	P, R, or S	43 at 400 Hz	5.0	L	P, R, or S	.15 at 400 Hz
0.35	C	K or L	12 at dc	7.5	M	K or L	.035 at dc
0.35	C	M or N	12 at 60 Hz	7.5	M	M or N	.035 at 60 Hz
0.35	C	P, R, or S	30 at 400 Hz	7.5	M	P, R, or S	.11 at 400 Hz
0.5	D	K or L	6 at dc	10.0	N	K or L	.02 at dc
0.5	D	M or N	6 at 60 Hz	10.0	N	M or N	.02 at 60 Hz
0.5	D	P, R, or S	12 at 400 Hz	10.0	N	P, R, or S	.04 at 400 Hz
0.75	E	K or L	3 at dc	12.5	P	K or L	.013 at dc
0.75	E	M or N	3 at 60 Hz	12.5	P	M or N	.015 at 60 Hz
0.75	E	P, R, or S	7 at 400 Hz	12.5	P	P, R, or S	.03 at 400 Hz
1.0	F	K or L	2 at dc	15.0	R	K or L	.01 at dc
1.0	F	M or N	2 at 60 Hz	15.0	R	M or N	.011 at 60 Hz
1.0	F	P, R, or S	4 at 400 Hz	15.0	R	P, R, or S	.02 at 400 Hz
1.75	G	K or L	0.9 at dc	20.0	S	K or L	.007 at dc
1.75	G	M or N	0.9 at 60 Hz	20.0	S	M or N	.007 at 60 Hz
1.75	G	P, R, or S	2 at 400 Hz	20.0	S	P, R, or S	.01 at 400 Hz
2.5	H	K or L	0.35 at dc	25.0	T	K or L	.006 at dc
2.5	H	M or N	0.35 at 60 Hz	25.0	T	M or N	.006 at 60 Hz
2.5	H	P, R, or S	0.6 at 400 Hz	25.0	T	P, R, or S	.007 at 400 Hz
3.0	J	K or L	0.3 at dc	30.0	U	K or L	.005 at dc
3.0	J	M or N	0.3 at 60 Hz	30.0	U	M or N	.005 at 60 Hz
3.0	J	P, R, or S	0.5 at 400 Hz	30.0	U	P, R, or S	.006 at 400 Hz

TABLE II. PIN code letters and parameters (configuration C).

Current rating		Voltage frequency and tripping time delay code letter from table IV	Resistance or impedance ohms (max)	Current rating		Voltage frequency and tripping time delay code letter from table IV	Resistance or impedance ohms (max)
(Amperes)	Code letter			(Amperes)	Code letter		
0.1	A	K or L	186 at dc	4.0	K	K or L	0.113 at dc
0.1	A	M or N	142 at 60 Hz	4.0	K	M or N	0.1 at 60 Hz
0.1	A	P, R, or S	350 at 400 Hz	4.0	K	P, R, or S	0.3 at 400 Hz
0.250	B	K or L	26.4 at dc	5.0	L	K or L	0.08 at dc
0.250	B	M or N	26.4 at 60 Hz	5.0	L	M or N	0.08 at 60 Hz
0.250	B	P, R, or S	60 at 400 Hz	5.0	L	P, R, or S	0.175 at 400 Hz
0.35	C	K or L	13.2 at dc	7.5	M	K or L	0.035 at dc
0.35	C	M or N	13.2 at 60 Hz	7.5	M	M or N	0.035 at 60 Hz
0.35	C	P, R, or S	30 at 400 Hz	7.5	M	P, R, or S	0.11 at 400 Hz
0.5	D	K or L	6 at dc	10.0	N	K or L	0.02 at dc
0.5	D	M or N	6.36 at 60 Hz	10.0	N	M or N	0.02 at 60 Hz
0.5	D	P, R, or S	13.2 at 400 Hz	10.0	N	P, R, or S	0.04 at 400 Hz
0.75	E	K or L	3 at dc	12.5	P	K or L	0.016 at dc
0.75	E	M or N	3 at 60 Hz	12.5	P	M or N	0.015 at 60 Hz
0.75	E	P, R, or S	7 at 400 Hz	12.5	P	P, R, or S	0.03 at 400 Hz
1.0	F	K or L	2 at dc	15.0	R	K or L	0.012 at dc
1.0	F	M or N	2 at 60 Hz	15.0	R	M or N	0.011 at 60 Hz
1.0	F	P, R, or S	4 at 400 Hz	15.0	R	P, R, or S	0.02 at 400 Hz
1.75	G	K or L	0.9 at dc	20.0	S	K or L	0.0075 at dc
1.75	G	M or N	0.9 at 60 Hz	20.0	S	M or N	0.007 at 60 Hz
1.75	G	P, R, or S	2 at 400 Hz	20.0	S	P, R, or S	0.01 at 400 Hz
2.5	H	K or L	0.35 at dc	25.0	T	K or L	0.006 at dc
2.5	H	M or N	0.35 at 60 Hz	25.0	T	M or N	0.006 at 60 Hz
2.5	H	P, R, or S	0.7 at 400 Hz	25.0	T	P, R, or S	0.009 at 400 Hz
3.0	J	K or L	0.3 at dc	30.0	U	K or L	0.005 at dc
3.0	J	M or N	0.3 at 60 Hz	30.0	U	M or N	0.005 at 60 Hz
3.0	J	P, R, or S	0.5 at 400 Hz	30.0	U	P, R, or S	0.006 at 400 Hz

TABLE III. Operating voltage, frequency, and tripping time delay (configuration A and B). 1/

Time delay percent rated current	Tripping-time delay at +25°C ± 2°C (tripping time in seconds)													
	50 V dc				240 V 60 Hz				240 V 400 Hz					
	K		L		M		N		P		R		S	
	Max	Min	Max	Min	Max	Min	Max	Min	Max	Min	Max	Min	Max	Min
100	No trip 1 hour		No trip 1 hour		No trip 1 hour		No trip 1 hour		No trip 1 hour		No trip 1 hour		No trip 1 hour	
135	---	---	---	---	100	9	16	.8	---	---	---	---	---	---
150	60	6	6	.3	---	---	---	---	---	---	---	---	---	---
165	---	---	---	---	---	---	---	---	45	4.5	4.5	.45	380	45
200	20	2.5	1.5	.13	20	3	1.6	.16	20	2.1	2	.2	160	20
400	2	.36	.29	.031	2.3	.3	.3	.04	4	.4	.35	.04	19	2
600	1	.13	.15	Inst	1	.13	.17	Inst	.6	Inst	.125	Inst	3.5	.250
800	.6	Inst	.06	Inst	.6	Inst	.09	Inst	.06	Inst	.05	Inst	.5	.03
1,000	.29	Inst	.05	Inst	.29	Inst	.043	Inst	.045	Inst	.036	Inst	.043	Inst
1,800 2/	No trip		No trip		No trip		No trip		No trip		No trip		No trip	

TABLE III. Operating voltage, frequency, and tripping-time delay (configuration A and B) - Continued. 1/

Time delay percent rated current	Tripping-time delay at high and low temperature (tripping time in seconds)													
	50 V dc				240 V 60 Hz				240 V 400 Hz					
	K		L		M		N		P		R		S	
	Max -40°C	Min +85°C	Max -40°C	Min +85°C	Max -40°C	Min +85°C	Max -40°C	Min +85°C	Max -40°C	Min +85°C	Max -40°C	Min +85°C	Max -40°C	Min +85°C
100	No trip 1 hour		No trip 1 hour		No trip 1 hour		No trip 1 hour		No trip 1 hour		No trip 1 hour		No trip 1 hour	
135	---	---	---	---	420	.7	75	.09	---	---	---	---	---	---
150	350	.3	50	.07	---	---	---	---	---	---	---	---	---	---
165	---	---	---	---	---	---	---	---	350	.3	55	.08	1,200	2.5
200	100	.1	10	.05	100	.05	10	.05	100	.1	10	.05	500	.5
400	20	Inst	3	Inst	20	Inst	3	Inst	20	Inst	3	Inst	100	Inst
600	5	Inst	1	Inst	5	Inst	1	Inst	5	Inst	1	Inst	5	Inst
800	2	Inst	.5	Inst	.5	Inst	.5	Inst	.5	Inst	.5	Inst	.5	Inst

1/ Circuit breakers shall not trip at 100 percent rated current but must trip at 135, 150, or 165 percent of rated current as appropriate. Between 100 percent and 125 or 150 percent, they may trip. Instantaneous is defined as less than 15 ms.

2/ High-inrush test shall be performed using one alternation which has a peak value of 1,800 percent of rated current. 400 Hz and dc delays shall be subjected to a 400 Hz waveform, 60 Hz delays shall be subjected to a 60 Hz waveform.

3/ High and low test temperature tolerances are ±2°C.

TABLE IV. Operating voltage, frequency, and tripping time delay (configuration C). 1/

Time delay percent rated current	Tripping-time delay at +25°C ± 2°C (tripping time in seconds)													
	50 V dc				240 V 60 Hz				240 V 400 Hz					
	K		L		M		N		P		R		S	
	Max	Min	Max	Min	Max	Min	Max	Min	Max	Min	Max	Min	Max	Min
100	No trip 1 hour		No trip 1 hour		No trip 1 hour		No trip 1 hour		No trip 1 hour		No trip 1 hour		No trip 1 hour	
135	---	---	---	---	100	9	10	0.6	---	---	---	---	---	---
150	28	2	3	0.3	---	---	---	---	---	---	---	---	---	---
165	---	---	---	---	---	---	---	---	44	3.4	4.5	0.32	260	22
200	10	0.6	1.2	0.13	20	2.2	3	0.13	25	2.1	1.9	0.15	150	9.5
400	2	0.15	0.5	0.031	3	0.3	1	0.03	5	0.4	0.4	0.02	19	1.9
600	1	Inst	0.25	Inst	2	Inst	0.3	Inst	2.4	Inst	0.25	Inst	7	Inst
800	0.5	Inst	0.1	Inst	0.8	Inst	0.15	Inst	1	Inst	0.1	Inst	0.4	Inst
1,000	0.1	Inst	Inst	Inst	0.25	Inst	0.1	Inst	0.1	Inst	0.05	Inst	0.043	Inst
1,800 2/	No trip		No trip		No trip		No trip		No trip		No trip		No trip	

TABLE IV. Operating voltage, frequency, and tripping-time delay (configuration C) - Continued. 1/

Time delay percent rated current	Tripping-time delay at high and low temperature (tripping time in seconds)													
	50 V dc				240 V 60 Hz				240 V 400 Hz					
	K		L		M		N		P		R		S	
	Max -40°C	Min +85°C	Max -40°C	Min +85°C	Max -40°C	Min +85°C	Max -40°C	Min +85°C	Max -40°C	Min +85°C	Max -40°C	Min +85°C	Max -40°C	Min +85°C
100	No trip 1 hour		No trip 1 hour		No trip 1 hour		No trip 1 hour		No trip 1 hour		No trip 1 hour		No trip 1 hour	
135	---	---	---	---	630	0.76	74	0.094	---	---	---	---	---	---
150	250	12	33	0.08	---	---	---	---	---	---	---	---	---	---
165	---	---	---	---	---	---	---	---	300	0.28	30	0.08	900	2.2
200	100	0.1	10	0.05	160	0.05	10	0.05	130	0.1	10	0.05	500	0.5
400	20	Inst	3	Inst	26	Inst	3	Inst	32	Inst	3	Inst	100	Inst
600	5	Inst	1	Inst	13	Inst	1	Inst	26	Inst	1	Inst	24	Inst
800	2	Inst	0.5	Inst	2.8	Inst	0.5	Inst	8.4	Inst	0.5	Inst	3	Inst

1/ Circuit breakers shall not trip at 100 percent rated current but must trip at 135, 150, or 165 percent of rated current as appropriate. Between 100 percent and 125 or 150 percent, they may trip. Instantaneous is defined as less than 15 ms.

2/ High-inrush test shall be performed using one alternation which has a peak value of 1,800 percent of rated current. 400 Hz and dc delays shall be subjected to a 400 Hz waveform, 60 Hz delays shall be subjected to a 60 Hz waveform.

3/ High and low test temperature tolerances are ±2°C.

3.5.3 Shock (250 g's). When circuit breakers are tested as specified in 4.2.3, the main circuit breaker contacts shall not trip. There shall be no evidence of mechanical or electrical damage.

3.6 Endurance. Endurance shall be in accordance with MIL-PRF-55629.

3.7 Resistance or impedance. See table I (configurations A and B), table II (configuration C).

3.8 Interrupting capacity. 2,000 amperes at 50 V dc; 2,000 amperes at 120 V ac, 60 Hz; 1,500 amperes at 120 V ac, 400 Hz; 1,000 amperes at 240 V ac, 60 Hz and 400 Hz.

3.9 Dielectric withstanding voltage. Dielectric withstanding voltage shall be in accordance with MIL-PRF-55629.

3.10 Vibration. Vibration shall be in accordance with MIL-PRF-55629.

3.11 Insulation resistance. Insulation resistance shall be in accordance with MIL-PRF-55629.

3.12 Auxiliary contacts. Contact capacity shall be 10 amperes to 250 volts, 60/400 Hz and 2 amperes resistive, 1 ampere inductive to 50 V dc.

3.13 Marking. Marking shall be as specified in MIL-PRF-55629, except the drawing PIN in accordance with 1.2 herein shall be used instead of the military PIN.

3.14 Recycled, recovered, or environmentally preferable materials. Recycled, recovered, or environmentally preferable materials should be used to the maximum extent possible provided that the material meets or exceeds the operational and maintenance requirements, and promotes economically advantageous life cycle costs.

3.15 Manufacturer eligibility. To be eligible for listing as an approved source of supply, a manufacturer shall be listed on the MIL-PRF-55629 Qualified Product List for at least one part, or perform the Group A inspection specified herein on a sample of parts agreed upon by the manufacturer and DLA Land and Maritime-VA.

3.16 Certificate of compliance. A certificate of compliance shall be required from a manufacturer requesting to be an approved source of supply.

3.17 Workmanship. Parts shall be free of flash pits, voids, and excessive mold marks. Visible parting line is acceptable.

4. VERIFICATION

4.1 Conformance inspection.

4.1.1 Inspection of product for delivery. Inspection of product for delivery shall consist of group A inspection of MIL-PRF-55629.

4.1.2 Certification. The acquiring activity, at its discretion, may accept a certificate of compliance with group A requirements in lieu of performing group A tests (see 6.2c).

4.1.3 Inspection of packaging. Inspection of packaging shall be in accordance with MIL-PRF-55629.

4.2 Shock.

4.2.1 Shock (100 g's).

a. Mounting method: Normal mounting means.

b. Test condition: Method 213 of MIL-STD-202, test condition I (100 g's, 6 ms).

c. Electrical-load conditions and measurements: Of the three shocks in each direction required, two shocks shall be performed with the circuit breaker energized at 100 percent of rated current, and at the applicable frequency, except that for the directions with the operating lever pivot up (table mount) and the operating lever pivot down (ceiling mount), no voltage or current shall be applied. Each energized shock shall be monitored to determine opening of the main or auxiliary circuit breaker contacts. The remaining shock in each direction shall be performed with the circuit breaker contacts open and unenergized and shall be monitored to determine closing of the main or auxiliary contacts.

4.2.2 Shock (150 g's).

a. Mounting method: Normal mounting means.

b. Test condition: Special.

(1) Peak: 150 g's.

(2) Duration: 6 ms.

(3) Waveform: Sawtooth.

c. Electrical-load conditions and measurements: Of the three shocks in each direction required, all shocks shall be performed with the circuit breaker energized at 100 percent of rated current, and at the applicable frequency except that for the directions with the operating lever pivot up (table mount), and the operating lever pivot down (ceiling mount), no voltage or current shall be applied.

4.2.3 Shock (250 g's).

a. Mounting method: Normal mounting means.

b. Test condition: Special.

(1) Peak: 250 g's.

(2) Duration: 1.5 ms.

(3) Waveform: Half-sine.

c. Electrical-load conditions and measurements: Of the three shocks in each direction required, all shocks shall be performed with the circuit breaker energized at 100 percent of rated current, and at the applicable frequency except that for the directions with the operating lever pivot up (table mount) and the operating lever pivot down (ceiling mount), no voltage or current shall be applied.

5. PACKAGING

5.1 Packaging. For acquisition purposes, the packaging requirements shall be as specified in the contract or order (see 6.2). When actual packaging of materiel is to be performed by DoD personnel, these personnel need to contact the responsible packaging activity to ascertain requisite packaging requirements. Packaging requirements are maintained by the Inventory Control Point's packaging activity within the Military Service or Defense Agency, or within the military service's system commands. Packaging data retrieval is available from the managing Military Department's or Defense Agency's automated packaging files, CD-ROM products, or by contacting the responsible packaging activity.

6. NOTES

(This section contains information of a general or explanatory nature which may be helpful, but is not mandatory.)

6.1 Intended use. Devices conforming to this drawing are intended for use when military specifications do not exist and qualified military devices that will perform the required function are not available for OEM application.

6.2 Ordering data. The contract or purchase order should specify the following:

a. Complete PIN (see 1.2).

b. Requirements for delivery of one copy of the conformance inspection data or certificate of compliance that parts have passed conformance inspection with each shipment of parts by the manufacturer.

c. Whether the manufacturer performs the group A tests or provides certification of compliance with group A requirements.

d. Requirements for notification of change of product to the contracting activity, if applicable.

e. Requirements for packaging and packing.

6.3 Users of record. Coordination of this document for future revisions is coordinated only with the approved source(s) of supply and the users of record of this document. Requests to be added as a recorded user of this drawing may be achieved online at CircuitProtect@dla.mil or if in writing to: DLA Land and Maritime, ATTN: VAT, Post Office Box 3990, Columbus, OH 43218-3990 or by telephone (614) 692-0548 or DSN 850-0548.

6.4 Approved source(s) of supply. Approved source(s) of supply are listed herein. Additional sources will be added as they become available. Assistance in the use of this drawing may be obtained online at CircuitProtect@dla.mil, or by contacting DLA Land and Maritime, ATTN: VAT, Post Office Box 3990, Columbus, OH 43218-3990 or by telephone (614)-692-0548 or DSN 850-0548.

DLA Land and Maritime drawing PIN	Vendor similar designation or type number 1/	Vendor CAGE	Vendor name and address
87061-XXXX	APGN66-87061-XXXX	82647	Sensata Technologies, Incorporated 529 Pleasant Street Attleboro, MA 02703-2421 Phone number: (508) 236-3287 Facsimile number: (508) 236-1598 E-mail: cmbinfoppp@sensata.com Uniform Resource Locator (URL): http://www.sensata.com
87061X-XXXX	APGN66-87061X-XXXX IAGN66-87061X-XXXX 2/		

1/ Parts must be purchased to the DLA Land and Maritime PIN to assure that all performance requirements and tests are met.
2/ Configuration C (high-inrush circuit breaker).