REVISIONS

LTR	DESCRIPTION	DATE	APPROVED
A	Add new resistance tolerance (B). Add new dimensional changes. Add new operating voltage. Add new ppm/°C (25). Add new suppliers. Editorial changes throughout.	23 MAY 88	D. Moore
B	Add new requirements for resistance characteristic, power ratings, solderability, and dimensions.	10 MAY 89	D. Moore
C	Changes in accordance with NOR 5905-R002-93.	31 AUG 93	D. Moore
D	Change reference to MIL-PRF-914. Editorial changes throughout.	29 AUG 00	K. Cottongim
E	Changes in accordance with NOR 5905-R004-03.	17 FEB 02	K. Cottongim
F	Add pure tin, manufacturer's eligibility, and pulse application paragraphs. Correct figure 1 reference pin. Remove vendor. Editorial changes throughout.	14 JUN 12	M. Radecki

CURRENT DESIGN ACTIVITY CAGE CODE 037Z3
HAS CHANGED NAMES TO:
DLA LAND AND MARITIME
COLUMBUS, OHIO 43218-3990

Prepared in accordance with ASME Y14.100

Source control drawing

REV STATUS OF PAGES																		
	REV	F	F	F	F	F	F	F	F									
	PAGES	1	2	3	4	5	6	7	8									

PMIC N/A	**PREPARED BY** Allan R. Knox	**DEFENSE SUPPLY CENTER, COLUMBUS** **COLUMBUS, OH**
Original date of drawing 3 August 1987	**CHECKED BY** David W. Withrow **APPROVED BY** David E. Moore	**TITLE** RESISTOR NETWORKS, FIXED, FILM, SURFACE MOUNT, 28 PIN, LEADLESS CHIP CARRIER
	SIZE A / **CODE IDENT. NO.** 14933	**DWG NO.** **87015**
	REV F	**PAGE** 1 **OF** 8

1. SCOPE

1.1 Scope. This drawing describes the requirements for a 28 pin, leadless chip carrier, resistor network. These networks are available in hermetically sealed and nonhermetically sealed packages.

1.2 Part or Identifying Number (PIN). The complete PIN is as follows:

87015	-	*	****	*	*
Drawing number		Schematic (1.2.1)	Resistance value designations (1.2.1.1)	Resistance tolerance (3.3.1)	Characteristic (1.2.1.2)

1.2.1 Schematic. The schematic of the resistor network is identified by a single letter in accordance with figure 1.

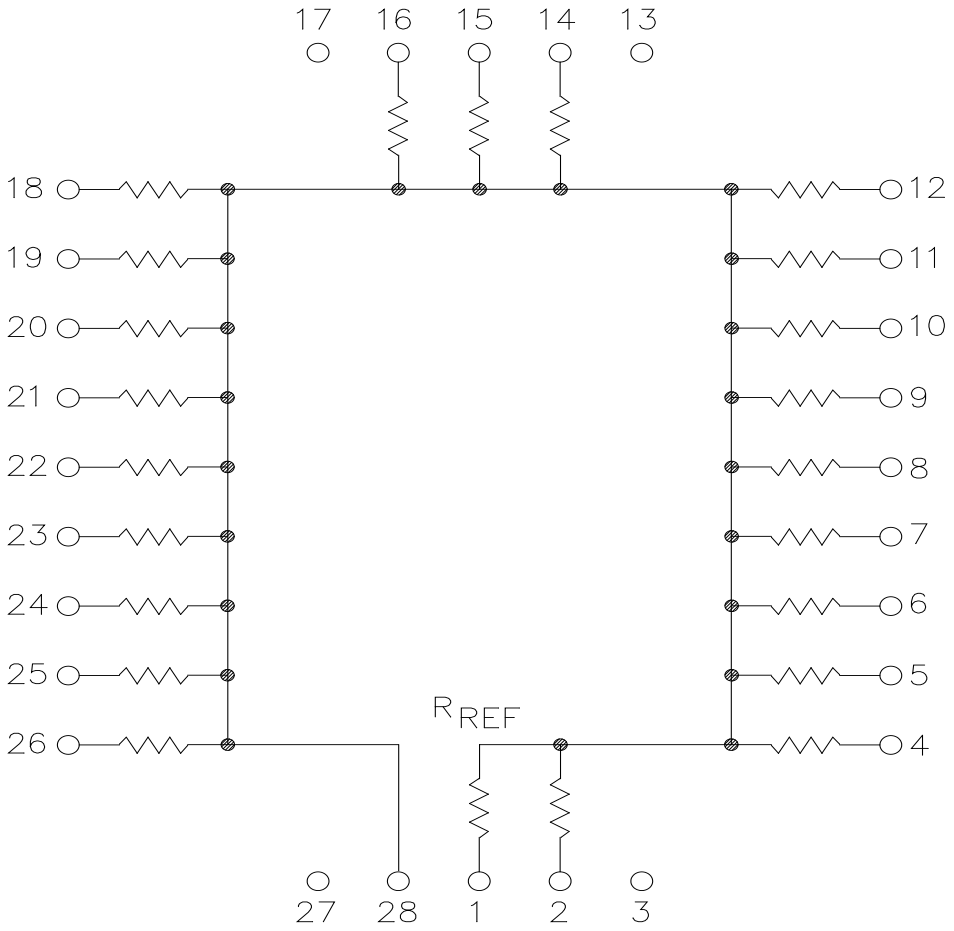

FIGURE 1. Schematics.

1.2.1.1 Resistance values. The resistance values are in accordance with MIL-PRF-914.

1.2.1.2 Characteristic. Resistor networks are available in characteristics C, H, R, or V in accordance with MIL-PRF-914 (see 3.2).

2. APPLICABLE DOCUMENTS

2.1 Government documents.

* 2.1.1 Specifications, standards, and handbooks. The following specifications, standards, and handbooks form a part of this document to the extent specified herein. Unless otherwise specified, the issues of these documents are those cited in the solicitation or contract.

DEPARTMENT OF DEFENSE SPECIFICATION

MIL-PRF-914 - Resistor Networks, Fixed, Film, Surface Mount, Nonestablished Reliability, and Established Reliability, General Specification For.

DEPARTMENT OF DEFENSE STANDARD

MIL-STD-202 - Test Methods for Electronic and Electrical Component Parts.
MIL-STD-790 - Established Reliability and High Reliability Qualified Products List (QPL) Systems for Electrical, Electronic, and Fiber Optic Parts Specifications.
MIL-STD-1285 - Marking of Electrical and Electronic Parts.

* (Copies of these documents are available online at https://assist.daps.dla.mil/quicksearch/ or from the Standardization Document Order Desk, 700 Robbins Avenue, Building 4D, Philadelphia, PA 19111-5094.)

* 2.2 Order of precedence. Unless otherwise noted herein or in the contract, in the event of a conflict between the text of this document and the references cited herein (except for related, specification sheets), the text of this document takes precedence. Nothing in this document, however, supersedes applicable laws and regulations unless a specific exemption has been obtained.

3. REQUIREMENTS

3.1 Item requirements. The individual item requirements shall be in accordance with MIL-PRF-914 and as specified herein.

3.2 Interface and physical dimension requirements. Resistors shall meet the interface and physical dimensions as specified in MIL-PRF-914 and herein (see figure 2). Cavity construction using wire bonding techniques shall be supplied only as a characteristic C hermetically sealed resistor network.

3.2.2 Termination. Termination finish shall be tin-lead or hot solder dip as specified in MIL-PRF-914.

* 3.2.2 Pure tin. The use of pure tin, as an underplate or final finish is prohibited both internally and externally. Tin content of resistor components and solder shall not exceed 97 percent, by mass. Tin shall be alloyed with a minimum of 3 percent lead, by mass (see 6.5).

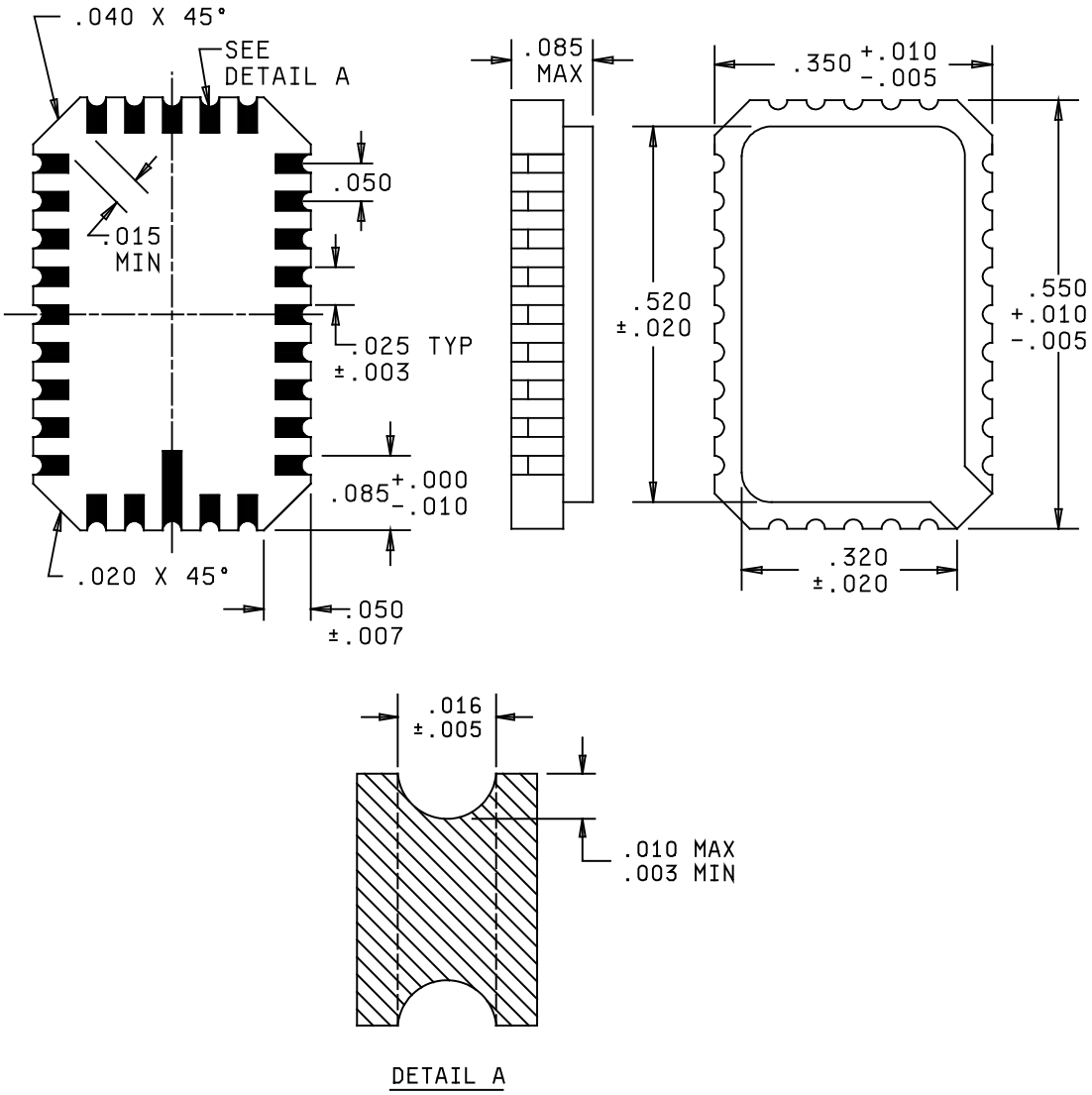

Inches	mm	Inches	mm	Inches	mm
.003	0.08	.020	0.51	.320	8.13
.005	0.13	.025	0.64	.350	8.89
.010	0.25	.040	1.02	.520	13.21
.015	0.38	.050	1.27	.550	13.97
.016	0.41	.085	2.16		

NOTES:
1. Dimensions are in inches.
2. Metric equivalents are given for general information only.
3. Unless otherwise specified, tolerances are ±.008 (0.20 mm).
4. Adjacent corner pads may be rounded or diagonally cut to meet the .015 (0.38 mm) minimum requirement.

FIGURE 2. Leadless chip carrier.

3.3 Electrical characteristic.

3.3.1 Resistance tolerance. Resistors are available in (B) ±.1 percent, (D) ±.5 percent, (F) ±1 percent, (G) ±2 percent, and (J) ±5 percent tolerances.

3.3.2 Resistor power ratings. The power rating for individual resistors shall be 0.05 watt maximum at 70°C.

3.3.3 Package power rating. The package power rating shall be 1.2 watts maximum at 70°C. For temperatures in excess of 70°C, power rating shall be derated in accordance with MIL-PRF-914.

3.3.4 Power conditioning. Power conditioning shall be in accordance with MIL-PRF-914 at 1.5 times rated power specified for individual resistors (see 3.3.2).

3.3.5 Temperature range. The operating temperature range shall be -55°C to +125°C.

3.3.6 Resistance temperature characteristic. The resistance temperature characteristic shall be in accordance with MIL-PRF-914.

3.3.7 TC tracking. The TC tracking shall be ±10 ppm/°C.

3.3.8 Resistance range. The resistance range shall be from 10 ohms to 100 kilohms.

3.3.9 Operating voltage. The maximum operating voltage shall be 50 V dc.

3.3.10 Solderability. When resistors are tested as specified in 4.5, there shall be no evidence of electrical or mechanical damage.

3.3.10.1 Failure criteria for leadless packages. The criteria for acceptable solderability during evaluation of the terminations are:

a. The total surface area of the dipped part of the termination is at least 95 percent covered by a continuous new solder coating.

b. Pinholes, voids, porosity, nonwetting, or dewetting are not concentrated in one area and do not exceed 5 percent of the total metallized termination area.

c. There shall be no solder bridging between any termination area and any other termination area not connected to it by design. In the event that the solder dipping causes bridging, the test shall not be considered a failure provided that a local application of heat (i.e., gas, soldering iron, or redipping) results in solder pullback and no wetting of the dielectric area is indicated by microscope examination at a magnification of between 10x and 20x.

That area of the surface to be tested as specified in 4.5c shall include the total metallized area of both the castellations and the terminal pads. In case of a dispute, the percentage of coverage with pinholes or voids shall be determined by actual measurement of these areas, as compared to the total area.

3.4 Environmental characteristic. The environmental characteristics shall be in accordance with MIL-PRF-914 characteristic C, H, R, or V (see 3.3.6).

3.5 Marking. Marking shall be in accordance with MIL-STD-1285, except the PIN shall be as specified in 1.2, with the manufacturer's CAGE number or trade mark and date code.

3.6 Recycled, recovered, or environmentally preferable materials. Recycled, recovered, or environmentally preferable materials should be used to the maximum extent possible provided that the material meets or exceeds the operational and maintenance requirements, and promotes economically advantageous life cycle costs.

* 3.7 Manufacturer eligibility. To be eligible for listing as a approved source of supply, a manufacturer shall be listed on the MIL-PRF-914 Qualified Products List for at least one part, or perform the group A and group B inspections specified herein on a sample agreed upon by the manufacturer and DLA Land and Maritime-VAT.

* 3.7.1 Certificate of compliance. A certificate of compliance shall be required from manufacturers requesting to be listed as an approved source of supply.

3.8 Workmanship. Resistors shall be uniform in quality and free from any defects that will affect life, serviceability, or appearance.

4. VERIFICATION

4.1 Product assurance program. The product assurance program specified in MIL-PRF-914 and maintained in accordance with MIL-STD-790 is not applicable to this document.

4.2 Qualification inspection. Qualification inspection is not applicable to this document.

4.2.1 Failure rate qualification. The failure rate qualification specified in MIL-PRF-914 is not applicable to this document.

4.3 Conformance inspection.

4.3.1 Inspection of product for delivery. Inspection of product for delivery shall consist of group A and group B inspections of MIL-PRF-914.

4.3.2 Certification. The acquiring activity, at its discretion, may accept a certificate of compliance with group B requirements in lieu of performing group B tests (see 6.2d).

4.4 Inspection of packaging. Inspection of packaging shall be in accordance with MIL-PRF-914.

4.5 Solderability. Solderability shall be in accordance with method 208 of MIL-STD-202. The following details shall apply:

a. Application of flux. Flux type shall be in accordance with MIL-PRF-914. Terminations shall be immersed in the flux, which is at room ambient temperature, to the minimum depth necessary to cover the surface to be tested. The terminations shall be completely immersed by individually dipping each edge with the Y1 axis 30 degrees to 45 degrees from vertical. The terminations to be tested shall be immersed in the flux for a period of 5 seconds to 10 seconds.

b. Solder dip. The dross and burned flux shall be skimmed from the surface of the molten solder. (NOTE: May not require separate operation in wave or flow pot). The molten solder shall be maintained at a uniform temperature of 245°C ±5°C. The surface of the molten solder shall be skimmed again prior to immersing the terminations in the solder. The part shall be attached to a dipping device and the flux covered terminations immersed one side at a time, in molten solder to the depth, and in the same manner specified in 4.5a. The immersion and emersion rates shall be 1.000 ±.250 inch per second and dwell time in the solder bath shall be 5.0 seconds ±0.5 second. After the dipping process, the part shall be allowed to cool in air. Residue flux shall be removed from the terminations by rinsing in a suitable solvent. If necessary, a soft cloth or cotton swab moistened with clean 91 percent isopropyl alcohol shall be used to remove all remaining flux.

c. Examinations of terminations. After each dip coated termination has been thoroughly cleaned of flux, the castellation and pad shall be examined using a magnification between 10x and 20x.

4.6 Visual and mechanical examination. Resistors shall be examined to verify that the materials, design, construction, physical dimensions, marking, and workmanship are in accordance with the applicable requirements of MIL-PRF-914.

5. PACKAGING

* 5.1 Packaging. For acquisition purposes, the packaging requirements shall be as specified in the contract or order (see 6.2). When actual packaging of materiel is to be performed by DoD personnel or in-house contractor personnel, these personnel need to contact the responsible packaging activity to ascertain packaging requirements. Packaging requirements are maintained by the Inventory Control Point's packaging activity within the Military Department or Defense Agency, or within the military service's system commands. Packaging data retrieval is available from the managing Military Department's or Defense Agency's automated packaging files, CD-ROM products, or by contacting the responsible packaging activity.

6. NOTES

(This section contains information of a general or explanatory nature that may be helpful, but is not mandatory.)

6.1 Intended use. Resistor networks are used in surface mounting applications where space is a major concern.

6.2 Ordering data. The contract or purchase order should specify the following:

a. Complete PIN (see 1.2).

b. Requirements for delivery: One copy of the conformance inspection data or certification of compliance that parts have passed conformance inspection with each shipment of parts by the manufacturer.

c. Requirements for packaging and packing. (i.e. ESD sensitive packaging).

d. Whether the manufacturer performs the group B tests or provides certification of compliance with group B requirements
(see 4.3.2).

6.3 PIN supersession. PIN's in the original 87015 and revision A have been superseded by a new PIN in revision B that includes a characteristic code to differentiate between hermetically and nonhermetically sealed resistor networks. Table I illustrates a generic PIN substitution:

TABLE I. PIN supersession.

87015 and 87015A	87015B Nonhermetic	87015B Hermetic
87015-******	87015-******V 87015-******H	87015-******C

* 6.4 Electrostatic charge. Under several combinations of conditions, these resistors can be electrically damaged, by electrostatic charges, and drift from specified value. Users should consider this phenomena when ordering or shipping resistors. Direct shipment to the Government is controlled by MIL-DTL-39032 which specifies a preventive packaging procedure.

* 6.5 Tin whisker growth. The use of alloys with tin content greater than 97 percent, by mass, may exhibit tin whisker growth problems after manufacture. Tin whiskers may occur anytime from a day to years after manufacture and can develop under typical operating conditions, on products that use such materials. Conformal coatings applied over top of a whisker-prone surface will not prevent the formation of tin whiskers. Alloys of 3 percent lead, by mass, have shown to inhibit the growth of tin whiskers. For additional information on this matter, refer to ASTM-B545 (Standard Specification for Electrodeposited Coatings of Tin).

* 6.6 Pulse applications. Designers are CAUTIONED on using the above resistors in high power pulse applications. Since they have not been qualified nor tested for such applications, damage and premature failure are possible.

* 6.7 User of record. Coordination of this document for future revisions is coordinated only with the approved source of supply and the users of record of this document. Requests to be added as a recorded user of this drawing may be achieved online at resistor@dla.mil or in writing to: DLA Land and Maritime-VAT, Post Office Box 3990, Columbus, OH 43218-3990 or by telephone (614) 692-0552 or DSN 850-0552.

* 6.8 Approved source of supply. Approved source of supply is listed herein. Additional sources will be added as they become available. Assistance in the use of this drawing may be obtained online at resistor@dla.mil or contact DLA Land and Maritime-VAT, Post Office Box 3990, Columbus, OH 43218-3990 or by telephone (614) 692-0552 or DSN 850-0552.

DLA Land and Maritime drawing PIN 87015-*******	Vendor similar designation or type number 1/	Vendor CAGE	Vendor's name and address
Characteristics C; resistance values 50 ohms through 100 kilohms; resistance tolerances B, D, F, G, and J. Schematics A.	102-281	57489	VISHAY Thin Film 2160 Liberty Drive Niagara Falls, NY 14304-3798
Characteristics C; resistance values 100 ohms through 100 kilohms; resistance tolerances B, D, F, G, and J. Schematics A.	HC-153	27851	Spectrum Microwave 400 Nickerson Road Marlborough, MA 01752

1/ Parts must be purchased to the DLA Land and Maritime PIN to assure that all performance requirements and tests are met.