REVISIONS

LT	DESCRIPTION	DATE	APPROVED
A	Added: International Resistive Company as a new vendor. Editorial changes throughout.	21 APR 89	David E. Moore
B	Dimensional changes to figure 2. Delete 3.3.6. Editorial changes throughout.	15 JAN 91	David E. Moore
C	Changed drawing title. Add B tol., D tol., and H characteristic. Editorial changes throughout.	31 MAR 94	Andrew R. Ernst
D	Changes in accordance with NOR 5905-R004-94.	29 AUG 94	David E. Moore
E	Revise to present DoD policy requirements, new P/N's, correct vendor CAGE, dimension change (figure 2), change reference to MIL-PRF-914, and editorial corrections throughout.	24 OCT 00	Kendall A. Cottongim
F	Add new characteristics “R” (±25 ppm) and “V” (±50 ppm). Add new source of supply.	15 OCT 01	Kendall A. Cottongim
G	Changes in accordance with NOR 5905-R001-03.	18 DEC 02	Kendall A. Cottongim
H	Add pure tin, manufacturer’s eligibility, and pulse application paragraphs. Editorial changes throughout.	15 MAR 13	M. Radecki

CURRENT DESIGN ACTIVITY CAGE CODE 037Z3
HAS CHANGED NAMES TO:
DLA LAND AND MARITIME
COLUMBUS, OHIO 43218-3990

Prepared in accordance with ASME Y14.100

REV STATUS OF PAGES																		
	REV	H	H	H	H	H	H	H										
	PAGES	1	2	3	4	5	6	7										

PMIC N/A	**PREPARED BY** Allan R. Knox	**DEFENSE ELECTRONICS SUPPLY CENTER** **DAYTON, OH**
Original date of drawing 16 June 1987	**CHECKED BY** David W. Withrow	**TITLE** RESISTOR NETWORK, FIXED, FILM, SURFACE MOUNT, GULL WING, 16 PIN
	APPROVED BY David E. Moore	
	SIZE A / **CODE IDENT. NO.** 14933	**DWG NO.** **87012**
	REV H	**PAGE** 1 **OF** 7

1. SCOPE

1.1 Scope. This drawing describes the requirements for a resistor network, fixed, film, small outline, 16 pin, supplied to the requirements of MIL-PRF-914 except as noted herein.

1.2 Part or Identifying Number (PIN). The complete PIN is as follows:

87012	-	A	A001	K	F
Drawing number		Schematic (1.2.1)	Resistance (1.2.1.1)	Characteristic (1.2.1.2)	Tolerance (3.3.1)

1.2.1 Schematics. The schematic of the resistor network is identified by a single letter in accordance with the drawings (see figure 1). The resistor element R_{REF} is the reference resistor element used in determining the ratio accuracy (when applicable).

1.2.1.1 Resistance value designations. The resistance value designations are in accordance with MIL-PRF-914. Resistance value designations for the schematic J as specified in table I.

TABLE I. Standard resistance values.

Resistance designator	R_1 (ohms)	R_2 (ohms)		Resistance designator	R_1 (ohms)	R_2 (ohms)
A001	82	130		A011	330	680
A002	120	200		A012	1.5 k	3.3 k
A003	130	210		A013	3.0 k	6.2 k
A004	160	260		A014	180	270
A005	180	240		A015	270	270
A006	180	390		A016	560	560
A007	220	270		A017	560	1.2 k
A008	220	330		A018	620	2.7 k
A009	330	390		A019	110	220
A010	330	470		A020	220	110

1.2.1.2 Characteristic. The characteristics are in accordance with MIL-PRF-914, characteristic R, characteristic V, characteristic H, characteristic K, and characteristic M.

2. APPLICABLE DOCUMENTS

2.1 Government documents.

* 2.1.1 Specifications, standards, and handbooks. The following specifications, standards, and handbooks form a part of this document to the extent specified herein. Unless otherwise specified, the issues of these documents are those cited in the solicitation or contract.

DEPARTMENT OF DEFENSE SPECIFICATION

MIL-PRF-914 - Resistor Networks, Fixed, Film, Surface Mount, Nonestablished Reliability, and Established Reliability, General Specification For.

* (Copies of these documents are available online at https://assist.dla.mil/quicksearch/ or from the DLA Document Services Order Desk, 700 Robbins Avenue, Building 4D, Philadelphia, PA 19111-5094.)

* 2.2 Order of precedence. Unless otherwise noted herein or in the contract, in the event of a conflict between the text of this document and the references cited herein (except for related, specification sheets), the text of this document takes precedence. Nothing in this document, however, supersedes applicable laws and regulations unless a specific exemption has been obtained.

3. REQUIREMENTS

3.1 Item requirements. The individual item requirements shall be in accordance with MIL-PRF-914 and as specified herein.

3.2 Interface and physical dimension requirements. Resistors shall meet the interface and physical dimensions as specified in MIL-PRF-914 and herein (see figure 2).

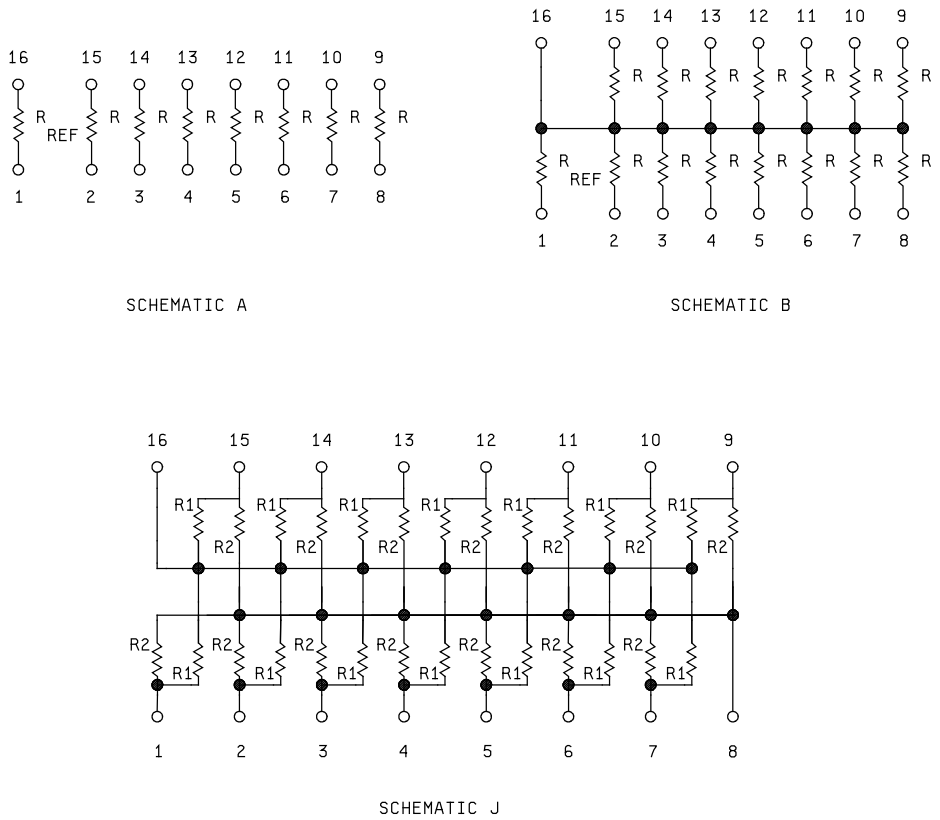

FIGURE 1. Schematics.

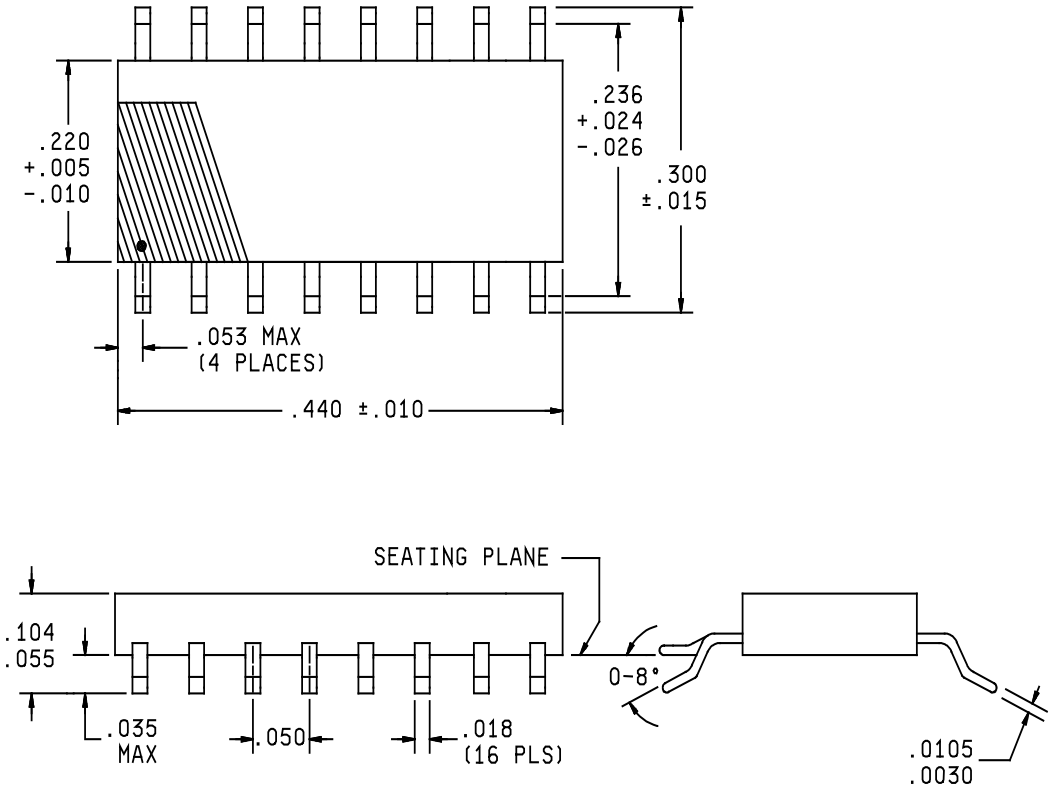

Inches	mm	Inches	mm	Inches	mm	Inches	mm
.0030	0.076	.018	0.46	.053	1.35	.300	7.62
.005	0.13	.024	0.61	.060	1.52	.440	11.18
.010	0.25	.026	0.66	.104	2.64		
.0105	0.267	.035	0.89	.220	5.59		
.015	0.38	.050	1.27	.236	5.99		

NOTES:

1. Dimensions are given in inches.
2. Metric equivalents are given for general information only.
3. Unless otherwise specified, tolerance is ±.005 (0.13 mm) for three place decimals.
4. Pin 1 locator shall be a dot, stripe, notch, or numeral 1 adjacent to pin number 1, in the shaded area.
5. The picturization of the styles above is given as representative of the envelope of the item. Slight deviations from the outline shown, which are contained within the envelope and do not alter the functional aspect of the device are acceptable.

FIGURE 2. Resistor network.

3.3 Electrical characteristics.

3.3.1 Resistance tolerance. Resistors are available in B (±0.1 percent), D (±0.5 percent), F (±1 percent), G (±2 percent), and J (±5 percent) tolerances.

3.3.2 Resistor power rating. The power rating for schematic B and schematic J shall be 0.08 watt at 70°C. The power rating for schematic A shall be 0.16 watt at 70°C.

3.3.3 Packaging power rating. The packaging power rating shall be 1.2 watt at 70°C.

3.3.4 Temperature range. The operating temperature range shall be -55°C to +125°C.

3.3.5 Resistance temperature characteristic. The resistance temperature characteristic shall not exceed ±25 ppm/°C for characteristic R, ±50 ppm/°C for characteristic V, ±50 ppm/°C for characteristic H, ±100 ppm/°C for characteristic K, and ±300 ppm/°C for characteristic M.

3.3.6 Resistance. The resistance values shall be 10 ohms to 2.2 megohms.

3.3.7 Operating voltage. The maximum operating voltage shall be 50 V dc.

* 3.4 Pure tin. The use of pure tin, as an underplate or final finish is prohibited both internally and externally. Tin content of resistor components and solder shall not exceed 97 percent, by mass. Tin shall be alloyed with a minimum of 3 percent lead, by mass (see 6.5).

3.5 Marking. Resistors shall be marked with the PIN assigned herein (see 1.2) and manufacturer's identification code (CAGE or logo). Pin 1 indicator shall be located adjacent to pin 1.

3.6 Recycled, recovered, or environmentally preferable materials. Recycled, recovered, or environmentally preferable materials should be used to the maximum extent possible provided that the materials meet or exceed the operational and maintenance requirements, and promote economically advantageous life cycle costs.

* 3.7 Manufacturer eligibility. To be eligible for listing as a approved source of supply, a manufacturer shall be listed on the MIL-PRF-914 Qualified Products List for at least one part, or perform the group A and group B inspections specified herein on a sample agreed upon by the manufacturer and DLA Land and Maritime-VAT.

* 3.7.1 Certificate of compliance. A certificate of compliance shall be required from manufacturers requesting to be listed as an approved source of supply.

3.8 Workmanship. Resistors shall be processed in such a manner as to be uniform in quality and free from defects that will affect life, serviceability, or appearance.

4. VERIFICATION

4.1 Qualification inspection. Qualification inspection in accordance with MIL-PRF-914 is not applicable to this document.

4.2 Conformance inspection.

4.2.1 Inspection of product for delivery. Inspection of product for delivery shall consist of group A (M level part) and group B inspections.

4.2.2 Certification. The acquiring activity, at its discretion, may accept a certificate of compliance with group B requirements in lieu of performing group B tests (see 6.2c).

4.3 Schematic J tests. For the tests on schematic J, the dc resistance measurements, resistance temperature characteristics measurement, and short time overload power application shall be made between each terminal and the application common terminal without compensation for the shunt circuits. The pin to pin dc resistance measurement shall be used directly to determine the acceptability to section 3 requirements.

5. PACKAGING

* 5.1 Packaging. For acquisition purposes, the packaging requirements shall be as specified in the contract or order (see 6.2). When actual packaging of materiel is to be performed by DoD personnel or in-house contractor personnel, these personnel need to contact the responsible packaging activity to ascertain packaging requirements. Packaging requirements are maintained by the Inventory Control Point's packaging activity within the Military Department or Defense Agency, or within the military service's system commands. Packaging data retrieval is available from the managing Military Department's or Defense Agency's automated packaging files, CD-ROM products, or by contacting the responsible packaging activity.

6. NOTES

(This section contains information of a general or explanatory nature which may be helpful, but is not mandatory.)

6.1 Intended use. Resistor networks are intended to be used in surface mounting applications where space is a major concern.

6.2 Ordering data. The contract or purchase order should specify the following:

a. Complete PIN (see 1.2).

b. Requirements for delivery: One copy of the conformance inspection data or a certificate of compliance that parts have passed conformance inspection with each shipment of parts by the manufacturer.

c. Whether the manufacturer performs the group B tests or provides a certification of compliance with group B requirements (see 4.2.2).

d. Requirements for packaging and packing.

6.3 Soldering. Extreme care should be taken when soldering these resistors. Prolonged exposure to high temperatures can damage these devices.

6.4 Electrostatic charge. Under several combinations of conditions, these resistors can be electrically damaged, by electrostatic charges, and drift from specified value. Users should consider this phenomena when ordering or shipping resistors. Direct shipment to the Government is controlled by MIL-DTL-39032 which specifies a preventive packaging procedure.

* 6.5 Tin whisker growth. The use of alloys with tin content greater than 97 percent, by mass, may exhibit tin whisker growth problems after manufacture. Tin whiskers may occur anytime from a day to years after manufacture and can develop under typical operating conditions, on products that use such materials. Conformal coatings applied over top of a whisker-prone surface will not prevent the formation of tin whiskers. Alloys of 3 percent lead, by mass, have shown to inhibit the growth of tin whiskers. For additional information on this matter, refer to ASTM-B545 (Standard Specification for Electrodeposited Coatings of Tin).

* 6.6 Pulse applications. Designers are CAUTIONED on using the above resistors in high power pulse applications. Since they have not been qualified nor tested for such applications, damage and premature failure are possible.

* 6.7 User of record. Coordination of this document for future revisions is coordinated only with the approved source of supply and the users of record of this document. Requests to be added as a recorded user of this drawing may be achieved online at resistor@dla.mil or in writing to: DLA Land and Maritime-VAT, Post Office Box 3990, Columbus, OH 43218-3990 or by telephone (614) 692-0552 or DSN 850-0552.

* 6.8 Approved source of supply. Approved source of supply is listed herein. Additional sources will be added as they become available. Assistance in the use of this drawing may be obtained online at resistor@dla.mil or contact DLA Land and Maritime-VAT, Post Office Box 3990, Columbus, OH 43218-3990 or by telephone (614) 692-0552 or DSN 850-0552.

DLA Land and Maritime drawing PIN 87012-******* 1/	Vendors similar designation or type number	Vendor CAGE	Vendor's name and address
Characteristic K and M, Schematics A, B, and J, Resistance values 10 ohms to 1.0 megohms, Resistance tolerance D, F, G, and J.	767-16 768-16	11236	CTS Corporation Berne Division 406 Parr Road Berne, IN 46711-9505
Characteristic K and M, Schematics A, B, and J, Resistance values 10 ohms to 2.2 megohms, Resistance tolerance F, G, and J.	SOMC-160*	91637	Vishay Dale PO Box 609 1122 23rd St. Columbus, NE 68602-0609
Characteristic R, H, K, and M, Schematics A; Resistance values 10 ohms to 150k ohms Schematics B; Resistance values 10 ohms to 75k ohms Resistance tolerance B, D, F, G, and J.	GM8*-0*-****Y	57027	International Resistive Company 4222 South Staples Street Corpus Christi, TX 78411-2796
Characteristic R, V, H, K, and M; Schematics A and B; Resistance values 100 ohms to 100kohms; Resistance tolerances B, D, F, G, and J.	103-331 (Schematic A) 103-332 (Schematic B)	57489	Vishay Thin Film 2160 Liberty dr. Niagara Falls, NY 14304-3676

1/ Parts must be purchased to this DLA Land and Maritime PIN to assure that all performance requirements and tests are met.