REVISIONS			
LTR	DESCRIPTION	DATE	APPROVED
A	Inactivated drawing and changed manufacturer's eligibility.	5Jun87	

INACTIVE FOR NEW DESIGN AFTER 5 Jun 87
USE MIL-R-6106/28

Prepared in accordance with DOD-STD-100

Selected item drawing

REV																															
PAGE																															
REV STATUS OF PAGES	REV	A		A									A																		
	PAGES	1	2	3	4	5	6	7	8	9	10	11	12	13																	

Original date of drawing:

11 July 1985

PREPARED BY Richard A. Yannitt

CHECKED BY James P. Martin

APPROVED BY Steven B. Learcy

SIZE A

CODE IDENT. NO. 14933

REV A

DEFENSE ELECTRONICS SUPPLY CENTER
DAYTON, OHIO

TITLE RELAYS, ELECTROMAGNETIC, PERMANENT MAGNET DRIVE, LOW LEVEL TO 5 AMPERES, 4 PDT, HERMETICALLY SEALED (SIMILAR TO MIL-R-6106/28) (32 V DC MAXIMUM COIL VOLTAGE AT +85 C MAXIMUM)

DWG NO. 84194

PAGE 1 OF 13

5945-E022

DESC FORM 144 MAR 76 AMSC N/A

DISTRIBUTION STATEMENT A. Approved for public release; distribution is unlimited.

1. SCOPE

1.1 Scope. This drawing describes the requirements for a hermetically sealed electromechanical relay. This drawing provides a level of quality and reliability assurance for acquisition of relays in accordance with MIL-R-6106 except as specified herein (see 3.4). The relays supplied to this drawing shall be subjected to all the tests as specified for type I-ER relays in the group A table of MIL-R-6106 for a M level relay (see 4.2).

1.2 Part number. The complete part number shall be as shown in the following example:

84194	-001
Drawing number	Dash number (see table I)

2. APPLICABLE DOCUMENTS

2.1 Government specifications and standards. Unless otherwise specified, the following specifications and standards, of the issue listed in that issue of the Department of Defense Index of Specifications and Standards specified in the solicitation, form a part of this specification to the extent specified herein.

SPECIFICATIONS

MILITARY

MIL-R-6106 - Relays, Electromagnetic (Including Established Reliability (ER) Types), General Specification For.

MIL-R-6106/28 - Relays, Electromagnetic (Including Established Reliability (ER) Types), Permanent Magnet Drive, Low Level to 5 Amperes, 4PDT, All Welded, Hermetically Sealed.

MIL-G-45204 - Gold Plating, Electrode Deposited.

(Copies of specifications, standards, handbooks, drawings, and publications required by manufacturers in connection with specific acquisition functions should be obtained from the contracting activity or as directed by the contracting officer.)

2.2 Other publications. The following document forms a part of this drawing to the extent specified herein. The issue of the document which is indicated as DoD adopted shall be the issue listed in the current DoDISS and the supplement thereto, if applicable.

Aerospace Material Specification

AMS 3332 - Rubber, Silicon Extreme Low Temperature Resistant.

(Application for copies should be addressed to the Society of Automotive Engineers, Inc., 400 Commonwealth Drive, Warrendale, PA 15096.)

2.3 Order of precedence. In the event of a conflict between the text of this drawing and the references cited herein, the text of this drawing shall take precedence.

3. REQUIREMENTS

3.1 Item requirements. The individual item requirements shall be in accordance with MIL-R-6106, MIL-R-6106/28, and as specified herein.

3.2 Design, construction, and physical dimensions. The design, construction, and physical dimensions shall be as specified in MIL-R-6106, MIL-R-6106/28, and herein (see figure 1 and table I).

3.3 Coil data and operational data. See tables II and III.

3.3.1 Operate time. Operating time shall be 6 milliseconds maximum with rated coil voltage.

3.3.2 Release time. Release time shall be 6 milliseconds maximum from rated coil voltage.

3.3.3 Contact bounce. Contact bounce shall be .5 millisecond maximum.

3.3.3.1 Break bounce normally open contacts only. .1 millisecond maximum.

3.3.4 Time current relay characteristics (see table IV). All relays shall withstand overload and fault currents. Relays must be able to sustain five applications (make and carry only) of power concurrently on adjacent poles at each of four different current levels in the sequence as listed in table IV. Separate relays shall be tested at 28 V dc and 115/200 V ac 400 Hz 3 phase. Cooling time between successive applications shall be 30 minutes. Tests shall be performed on both normally open and normally closed contacts. There shall be no failures or evidence of welding or sticking and relays shall pass contact voltage drop at the conclusion.

3.4 Physical. Physical requirements of the relay shall be as specified in MIL-R-6106/28 and herein (see table I).

3.4.1 Dimensions and configuration. See figure 1.

TABLE I. Mechanical and physical characteristics.

Dash numbers 84194 -	Terminal type	Mounting configuration	Superseding part number M6106/28-
001	Socket pin	A	012M
002	Solder pin	A	004M
003	Socket pin	B	024M
004	Solder pin	B	016M
005	Solder hook	B	020M
006	Solder pin	C	028M
007	Solder hook	C	032M

TABLE II. Operating characteristics.

Coil data									
Nominal		Max 1/		Max pickup voltage			Dropout voltage 2/	Hold voltage 2/	Coil suppression (back EMF) V dc 2/
Volts	Res. ±10% at 25°C	Volts 1/	Ampere	Normal 2/	High temp. test	Cont. current test			
28	290	32	.081	18	19.8	22.5	1.5	7.0	42.0

1/ Maximum ambient temperature of +85°C.

2/ Over the temperature range.

TABLE III. Rated contact load (amperes per pole) case grounded.

Type of load	(Endurance) life operating cycles X 10^3	28 V dc Main NO	28 V dc Main NC	115 V ac, 1 phase Main 400 Hz	115/200 V ac, 3 phase Main 400 Hz	See appropriate notes
Resistive	100	5	5	5	5	
Inductive	100	---	---	---	---	
Inductive	20	3	3	5	5	
Motor	100	2	2	3	3	
Lamp	100	1	1	1	1	
Transfer load	---	---	---	---	---	1/
Mechanical life reduced current	400	1.25	1.25	1.25	1.25	
Min current		Applicable per MIL-R-6106				
Low level	100	Applicable per MIL-R-6106				2/ 3/
Multiple loads	As applicable	See note				4/

NOTES:

1/ Transfer load indicates relay suitable for transfer between unsynchronized ac power supplies at rating indicated.

2/ For low level the following shall apply:

a. During endurance and operational reliability testing, contact load shall be 10 to 50 microamperes; 10 to 50 millivolts open circuit voltage, 100 ohms maximum contact resistance.

b. Static contact resistance shall be performed at 50 mA maximum, 50 mV maximum.

3/ For group A contact voltage drop test, high level testing shall be performed first, followed by low level testing. The contacts shall not make or break the high level load.

4/ Relay shall be capable of switching low level while switching any of the other rated loads on adjacent contacts.

TABLE IV. Time current relay characteristics at 25°C.

1	10 A	1 hour
2	15 A	20 seconds
3	37.5 A	2 seconds
4	75 A	.53 second

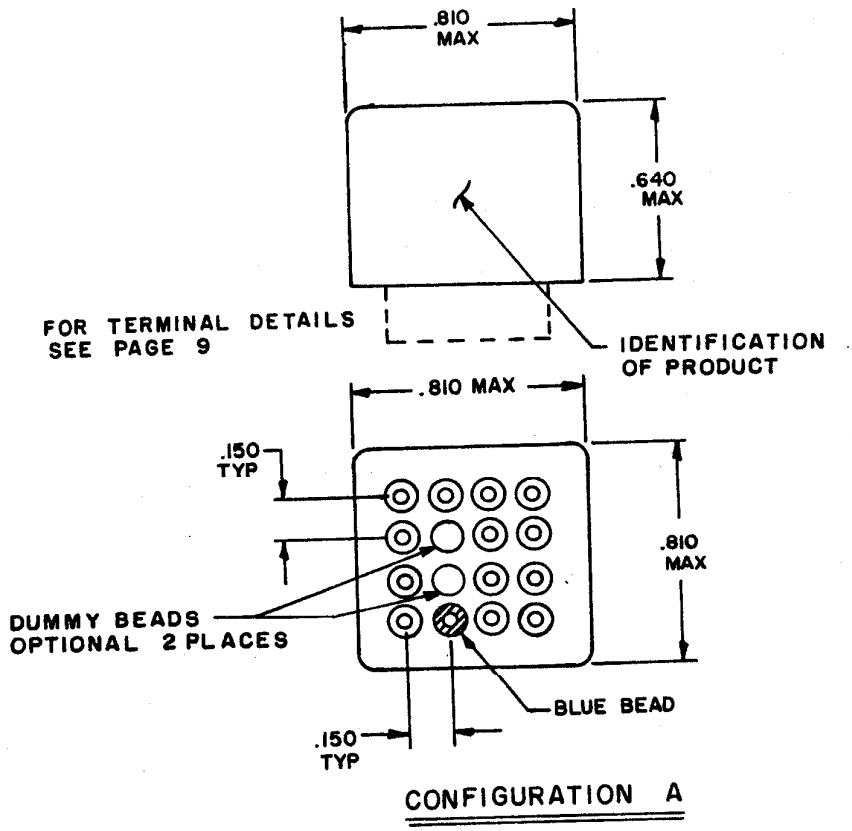

FIGURE 1. Outline drawing (for details, see table I).

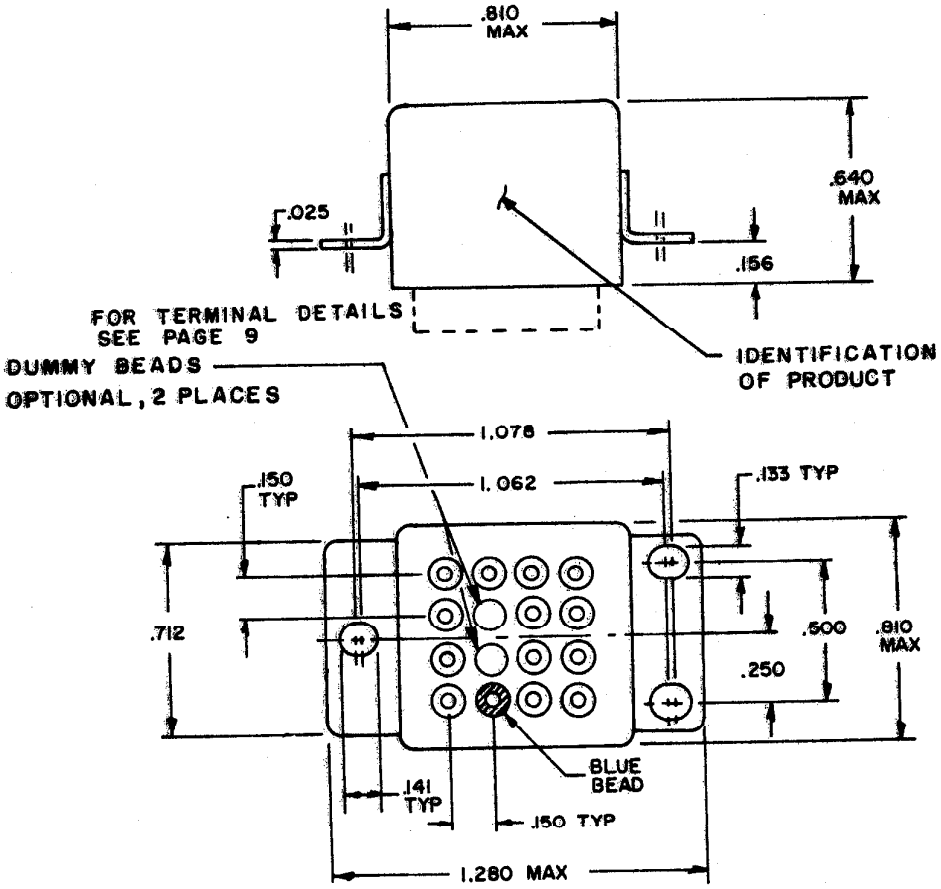

CONFIGURATION B

FIGURE 1. Outline drawing (for details, see table I) - Continued.

DEFENSE ELECTRONICS SUPPLY CENTER DAYTON, OHIO	SIZE A	CODE IDENT. NO. 14933	DWG NO. 84194
		REV	PAGE 6

DESC FORM 144A
APR 83

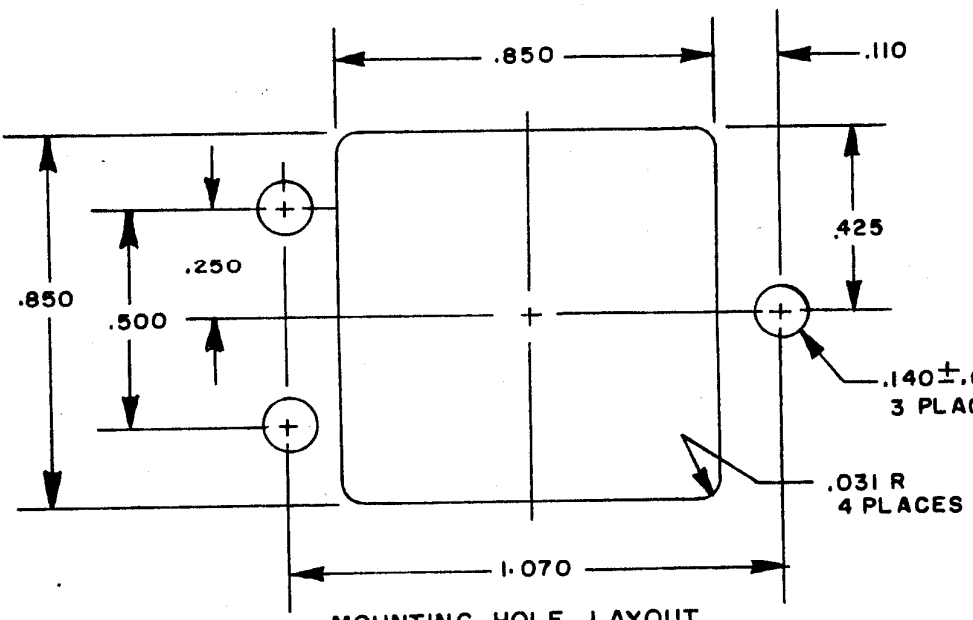

MOUNTING HOLE LAYOUT

CONFIGURATION B

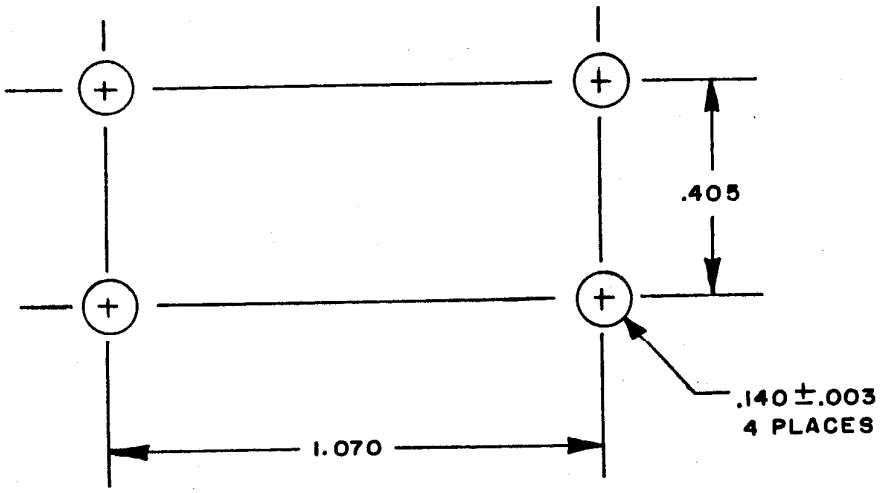

MOUNTING HOLE LAYOUT

CONFIGURATION C

FIGURE 1. Outline drawing (for details, see table I) - Continued.

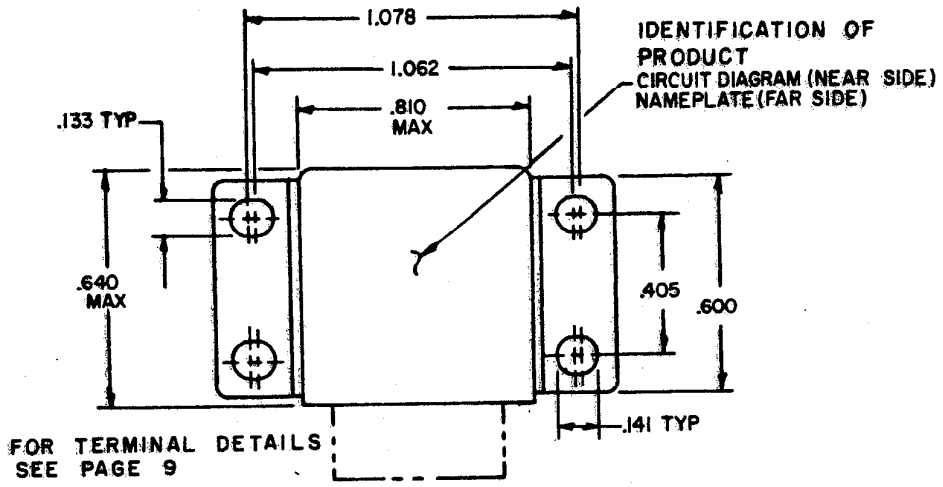

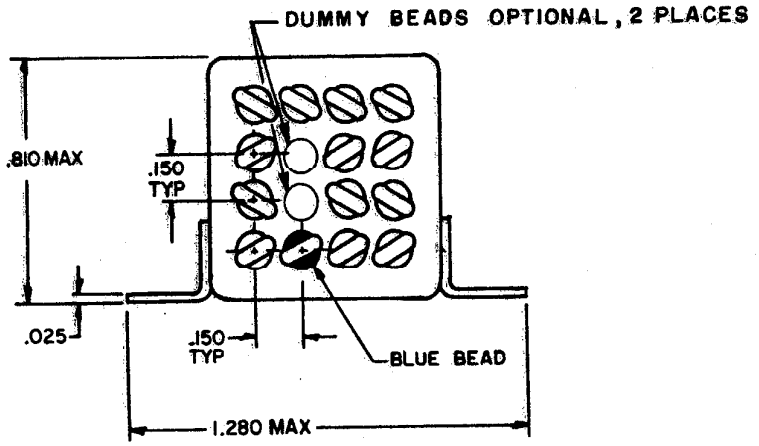

CONFIGURATION C

FIGURE 1. Outline drawing (for details, see table I) - Continued.

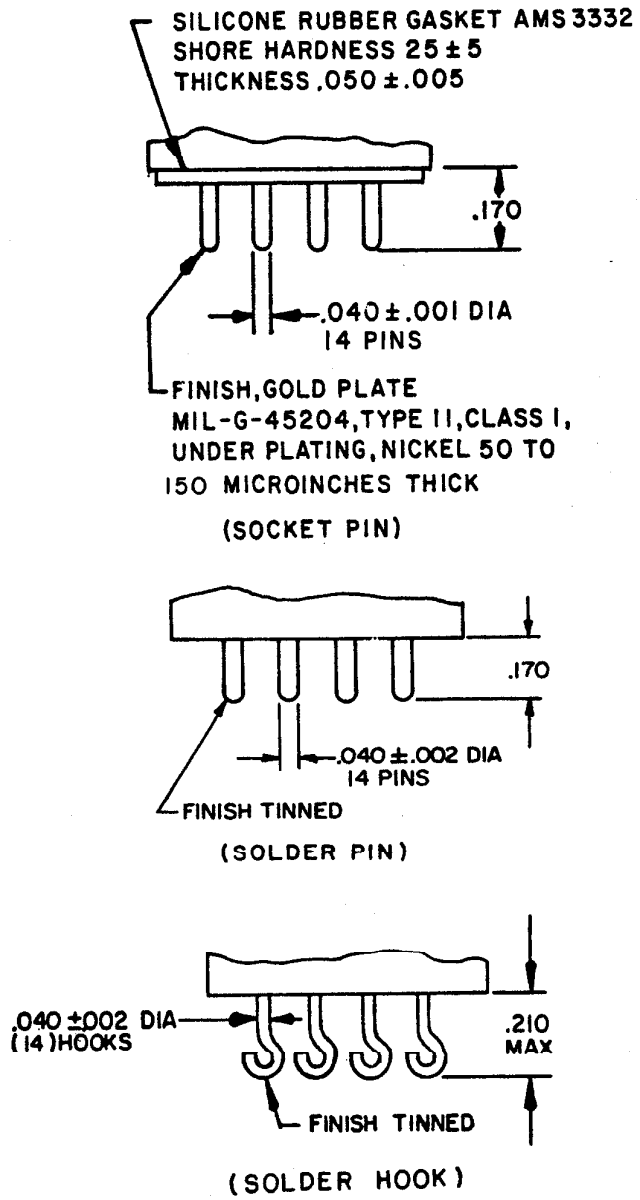

FIGURE 1. Outline drawing (for details, see table I) - Continued.

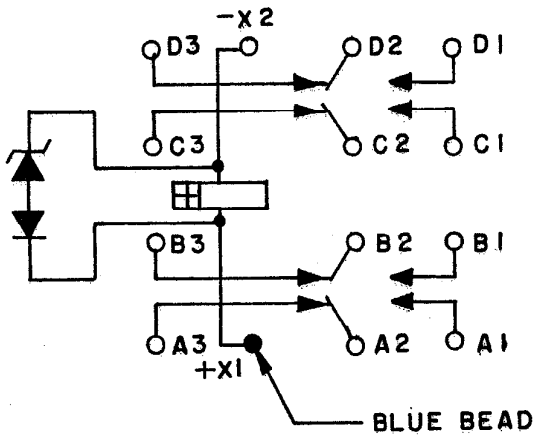

CIRCUIT DIAGRAM

Inches	mm	Inches	mm	Inches	mm
.001	0.03	.140	3.56	.600	15.24
.002	0.05	.141	3.58	.640	16.26
.003	0.08	.150	3.81	.712	18.08
.005	0.13	.156	3.96	.810	20.57
.025	0.64	.170	4.32	.850	21.59
.031	0.79	.210	5.33	1.062	26.97
.040	1.02	.250	6.35	1.070	21.18
.050	1.27	.405	10.29	1.078	27.38
.110	2.79	.425	10.80	1.280	32.51
.133	3.38	.500	12.70		

NOTES:
1. There shall be affixed to the relay a suitable legible circuit diagram that identifies each terminal location specified.
2. Metric equivalents are given for general information only.
3. Dimensions are in inches.
4. Unless otherwise specified, tolerance is ±.010 (0.25 mm).
5. These relays are polarized monostable.
6. This relay shall not operate or be damaged by reverse polarity. Semiconductors shall not be used for this purpose.
7. Permanent magnet drive consists of a permanent magnet with its flux path switched and combined with the electro-magnet flux.

FIGURE 1. Outline drawing (for details, see table I) - Continued.

3.5 Environmental characteristics. Relays shall meet all environmental requirements as specified in MIL-R-6106/28 and maximum ambient temperature shall be +85°C.

3.5.1 Electrical characteristics. Relays shall meet all electrical characteristics as specified in MIL-R-6106/28 and herein.

3.6 Marking. Marking shall be in accordance with MIL-R-6106 except the part number shall be in accordance with 1.2 herein. The "MIL-R-6106/28-XXXM" part number shall not be used.

3.7 Quality assurance requirements. Relays furnished under this drawing shall have been subjected to, and passed all the requirements, tests, and inspections detailed herein.

3.7.1 Quality conformance inspection. Quality conformance inspection shall be in accordance with MIL-R-6106 and 4.2 herein.

3.8 Certification as an approved source of supply. In order to be listed as an approved source of supply for relays manufactured to this drawing, a manufacturer shall:

a. Agree to make available to DESC, upon request, all pertinent test data on its production of the subject part, including, but not limited to, test data in accordance with the qualification inspection table of MIL-R-6106, type I ER.

b. Provide to DESC-EMD or its designated agent, upon request, free of charge and without obligation, a current production sample from its production of the subject part.

c. Meet one of the following criteria:

(1) Currently possess listing on qualified product list QPL-6106 for at least one part.

(2) Be in current production of the subject part.

3.9 Certificate of compliance. A certificate of compliance shall be required from a manufacturer in order to be listed as an approved source of supply (see 6.6 and 6.7).

3.10 Supersession data. See table I.

4. QUALITY ASSURANCE PROVISIONS

4.1 Sampling and inspection. Sampling and inspection shall be in accordance with MIL-R-6106, except as modified herein.

4.2 Quality conformance inspection. Quality conformance inspection shall be in accordance with group A listing of MIL-R-6106. Group A testing shall be performed on each inspection lot and manufacturers shall keep lot records for 3 years (minimum), monitor for compliance to the prescribed procedures, and observe that satisfactory manufacturing conditions and records on lots are maintained for these relays.

4.2.1 Group A inspection. Group A inspection shall consist of all tests specified in MIL-R-6106 for failure rate level "M". For seal test, the radioisotope procedure shall be performed.

5. PACKAGING

5.1 Packaging requirements. The requirements for packaging shall be in accordance with MIL-R-6106.

6. NOTES

6.1 Notes. Only definitions of the notes specified in MIL-R-6106 shall apply to this drawing.

6.2 Intended use. Relays conforming to this drawing are intended for use when military specifications do not exist and qualified military devices that will perform the required function are not available for O.E.M. application. This drawing is intended exclusively to prevent the proliferation of unnecessary duplicate specifications, drawings, and stock catalog listings. When a military specification exists and the product covered by this drawing has been qualified for listing on QPL-6106, this drawing will become inactive for new design. The QPL-6106 product shall be the preferred item for all applications.

6.3 Ordering data. The acquisition document should specify the following:

a. Complete part number (see 1.2).

b. One copy of the quality conformance inspections as required in 4.2, to be shipped with each lot.

c. Requirements for packaging and packing.

6.4 Replaceability. Relays covered by this drawing will replace the same generic device covered by a contractor prepared specification or drawing.

6.5 Comments. Comments on this drawing should be directed to DESC-EMD, Dayton, Ohio 45444, or telephone 513-296-6184.

6.6 Submission of certificate of compliance. The certificate of compliance submitted to DESC-EMD, prior to listing as an approved source, shall state the manufacturer's product meets the requirements herein.

6.7 Approved source of supply. Approved source of supply are listed herein. Additional sources will be added as they become available. The vendors listed herein have agreed to this drawing and a certificate of compliance (see 3.9) has been submitted to DESC-EMD.

DESC drawing part number 84193	Vendor CAGE number	Vendor similar part number
-001	99699	ES-405-1088
-002	"	ES-405-1089
-003	"	ES-405-1090
-004	"	ES-405-1091
-005	"	ES-405-1092
-006	"	ES-405-1093
-007	"	ES-405-1094
-001	35344	Y-A4N-109
-002	"	Y-A1N-109
-003	"	Y-D4N-109
-004	"	Y-D1N-109
-005	"	Y-D2N-109
-006	"	Y-J1N-109
-007	"	Y-J2N-109
-001	78290	FCB-410-101
-002	"	FCB-410-102
-003	"	FCB-410-103
-004	"	FCB-410-104
-005	"	FCB-410-105
-006	"	FCB-410-106
-007	"	FCB-410-107

Vendor CAGE number	Vendor name and address
99699	Deutsch Relays, Inc. 65 Daly Road East Northport, NY 11731
35344	Leach Corporation, Relay Divison 5915 Avalon Boulevard Los Angeles, CA 90003
78290	Struthers-Dunn, Inc. Pitman, New Jersey 08071