REVISIONS

LTR	DESCRIPTION	DATE	APPROVED
A	Page 1: Add Inactive for new design and drawing type. Page 2: Add operational requirements notes 1 through 6.	8/29/85	James A. Coulter Steven B. Searcy
B	Page 3: Add maximum permissible radius. Change note 3 to read ±.010. Add note 5 to allow tooling holes. Page 4: Add clearance between circuit traces. Add radius on contact pad. Add tolerance for angles in note 3. Change radius on circuit trace. Page 5: Add maximum radius to contact blade carrier. Page 6: Clarify dimensional requirements. Change view A – A. Add additional requirements to note 4. Add note 5.	5/1/86	James A. Coulter Steven B. Searcy
C	Editorial and format changes throughout.	6/1/02	Kendall Cottongim
D	Editorial changes.	09/23/2013	Michael Radecki

Inactive for new design

CURRENT DESIGN ACTIVITY CAGE CODE 037Z3
DEFENSE LOGISTICS AGENCY
LAND AND MARITIME
COLUMBUS, OHIO 43218-5000

Prepared in accordance with ASME Y14.100 — Multidetail drawing

REV																						
PAGE																						
REV STATUS OF PAGES	REV	D	D	D	D	D	D															
	PAGES	1	2	3	4	5	6															

PMIC N/A	**PREPARED BY** **Ken Smith**	**DEFENSE ELECTRONICS SUPPLY CENTER, DAYTON, OH 45444-5000**
Original date of drawing **27 November 1984**	**CHECKED BY** **Robert P. Ried** **APPROVED BY** **James A. Coulter** **Steven B. Searcy**	**TITLE** **ROTARY SWITCH**
	SIZE A / **CODE IDENT. NO. 14933**	**DWG NO. 84176**
	REV D	**PAGE 1 OF 6**

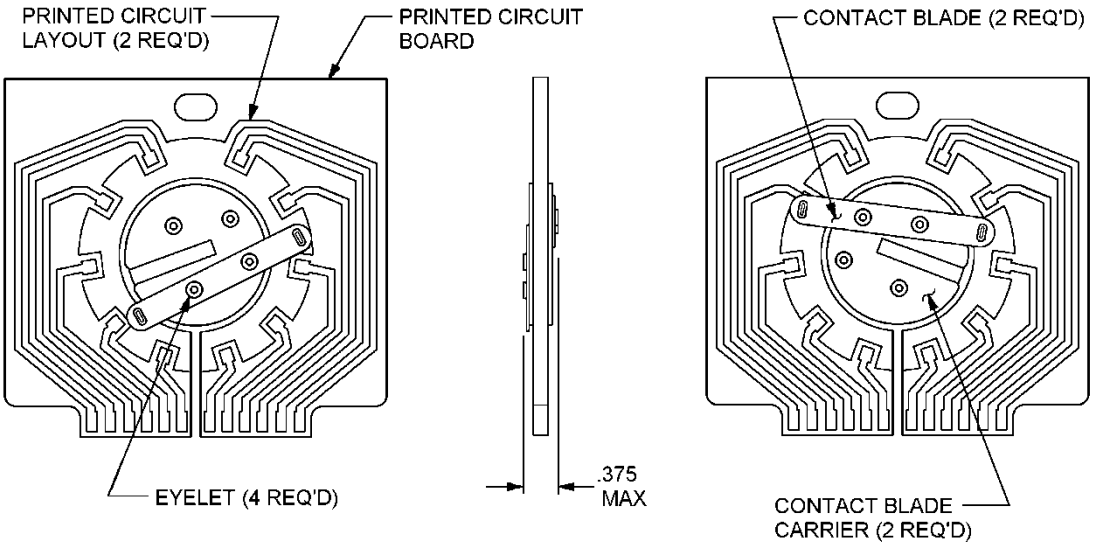

ASSEMBLY

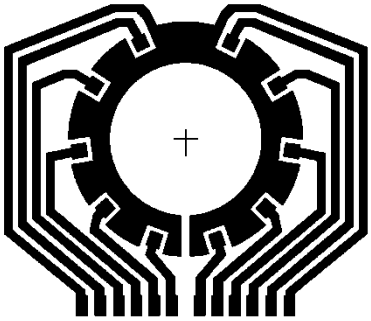

PRINTED CIRCUIT LAYOUT

ASSEMBLY

NOTES:

1. Electrical contact make before break.
2. Contact pressure 50 grams minimum.
3. Rotational torque of contact blade carrier 6 inch-ounce maximum.
4. Printed circuit section to be captured within the shoulders of the contact blade carrier and rotation bearing fit to be .005 nominal.
5. Must be capable of switching audio signals with power amplitudes between –40 dBm to 20 dBm.
6. 100 percent production testing for point to point continuity.

DEFENSE ELECTRONICS SUPPLY CENTER, DAYTON, OH 45444-5000	SIZE **A**	CODE IDENT NO. **14933**	DWG NO. **84176**
		REV D	PAGE 2

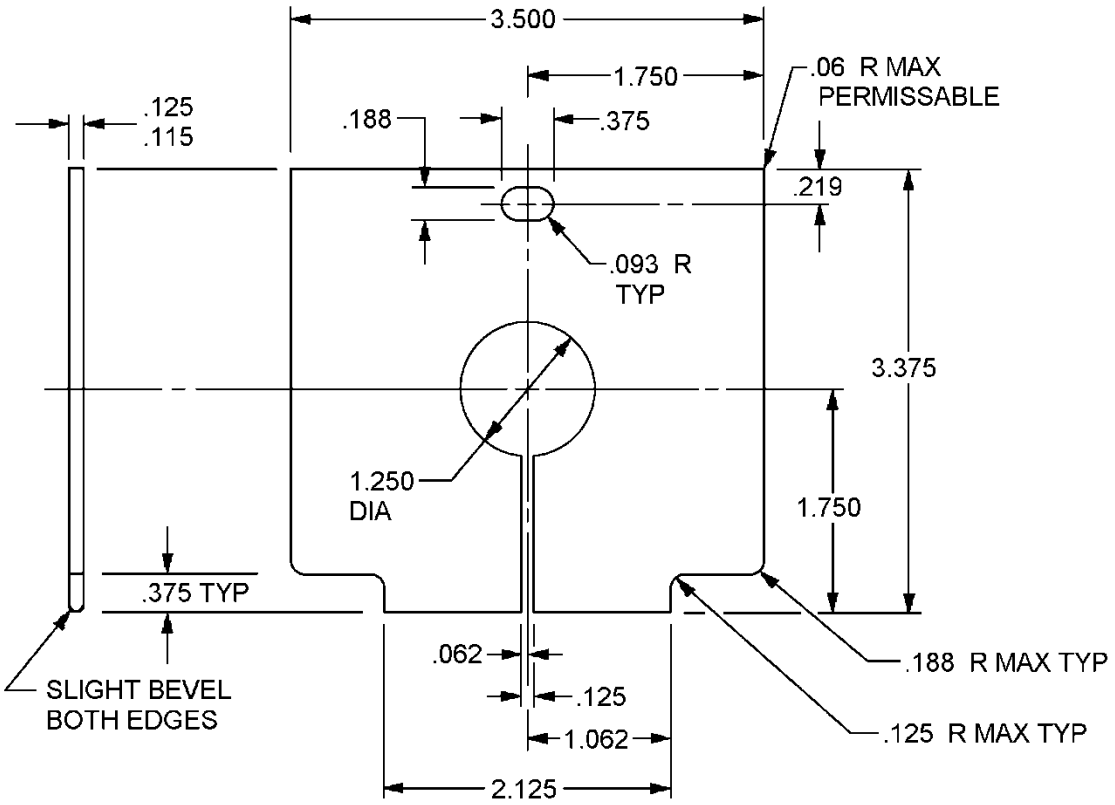

Inches	mm	Inches	mm
.060	1.53	.375	9.53
.062	1.57	1.062	26.97
.093	2.36	1.250	31.75
.115	2.92	1.750	44.45
.125	3.18	2.125	53.98
.188	4.78	3.375	85.73
.219	5.56	3.500	88.90

NOTES:
1. Dimensions are in inches.
2. Metric equivalents are given for general information only.
3. Unless otherwise stated, tolerance is ±.010 (0.025 mm).
4. Material glass epoxy, type FR4.
5. Tooling holes are permissible provided there is no interference with printed circuitry.

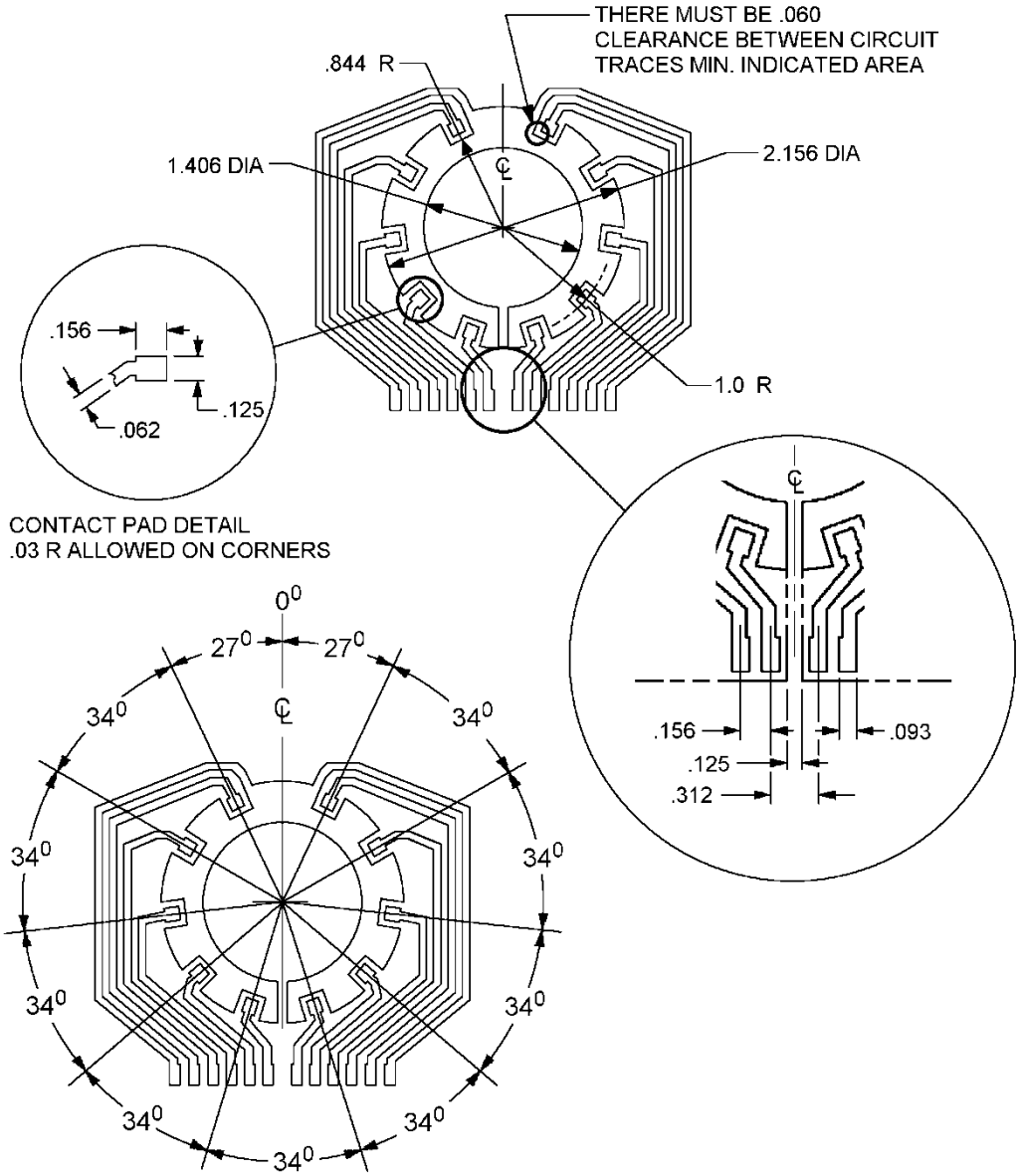

Inches	mm	Inches	mm
.030	.76	.312	7.92
.062	1.57	.875	22.23
.093	2.36	1.000	25.40
.125	3.18	1.406	35.71
.156	3.96	2.156	54.71

NOTES:

1. Dimensions are in inches.
2. Metric equivalents are given for general information only.
3. Unless otherwise stated, tolerance is ±.015 (0.38 mm), angles ± 1°.
4. Material 1 oz copper with .00005 gold plate in accordance with SAE-AMS2422, over .0001 min nickel in accordance with SAE-AMS-QQ-N-290 or equivalent.

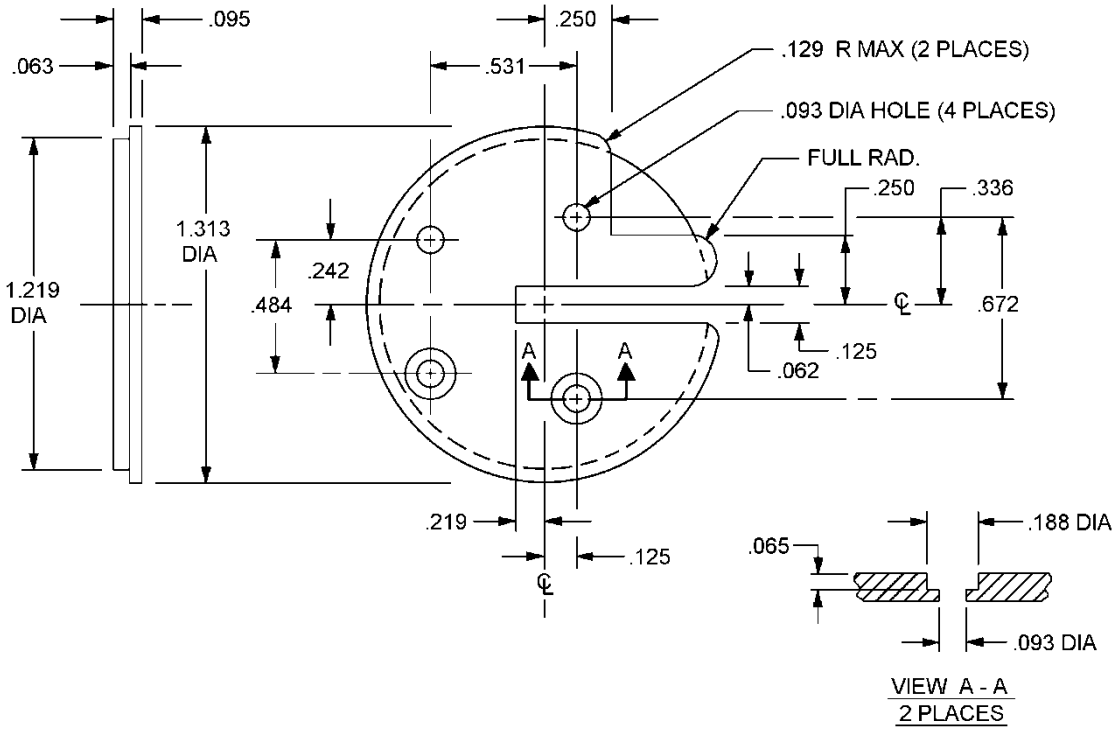

Inches	mm	Inches	mm
.062	1.57	.242	6.15
.063	1.60	.250	6.35
.065	1.65	.336	8.53
.093	2.36	.484	12.29
.095	2.41	.531	13.49
.125	3.18	.672	17.07
.129	3.28	1.219	30.96
.188	4.78	1.313	33.35
.219	5.56		

NOTES:

1. Dimensions are in inches.
2. Metric equivalents are given for general information only.
3. Unless otherwise stated, tolerance is ±.005 (0.13 mm), angles ± 1°.
4. Material, Super tough nylon in accordance with ASTM D4066-82 or equivalent.

Contact blade carrier.

DEFENSE ELECTRONICS SUPPLY CENTER, DAYTON, OH 45444-5000	SIZE **A**	CODE IDENT NO. **14933**	DWG NO. **84176**
		REV D	PAGE 5

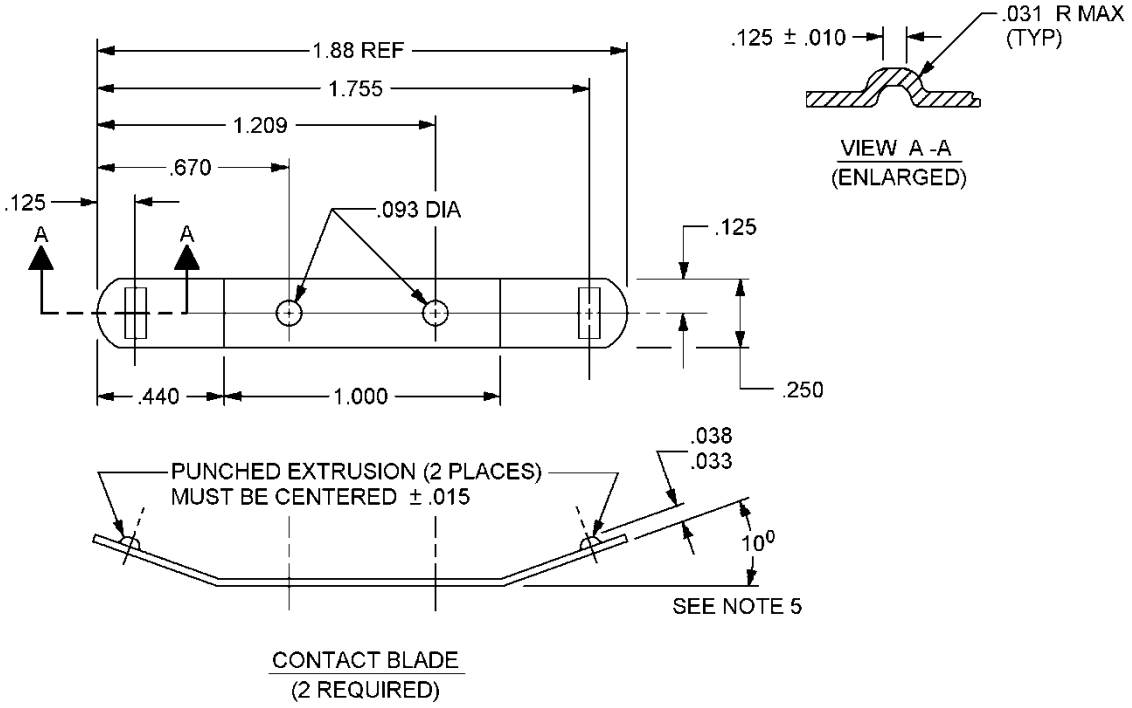

Inches	mm	Inches	mm
.010	.254	.440	11.176
.015	.381	.670	17.018
.033	.838	1.00	25.4
.038	.965	1.209	30.708
.093	2.36	1.755	44.577
.125	3.175	1.88	47.752
.250	6.35		