REVISIONS			
LTR	DESCRIPTION	DATE	APPROVED

Prepared in accordance with ASME Y14.100

REV STATUS OF PAGES	REV																	
	PAGES	1	2	3	4	5	6											

PMIC N/A	**PREPARED BY** Michael A. Radecki	**DESIGN ACTIVITY** **DLA LAND AND MARITIME** **COLUMBUS, OH 43218-3990**
Original date of drawing 2 April 2013	**CHECKED BY** Andrew R. Ernst **APPROVED BY** Robert M. Heber	**TITLE** ATTENUATORS, FIXED, COAXIAL LINE (SERIES N), FREQUENCY RANGE: DC TO 12.4 GHz, CLASS III, LOW POWER
	SIZE A / **CODE IDENT. NO.** 037Z3	**DWG NO.** **13015**
	SCALE N/A / **REV**	**PAGE** 1 **OF** 6

1. SCOPE

1.1 Scope. This drawing describes the requirements for fixed coaxial line (series N) attenuators screened to MIL-DTL-3933. The attenuators described herein are direct replacements for non-screened (N) MIL-DTL-3933/18 attenuators that lost their qualified MIL-DTL-3933 source (see 6.4 and table II).

1.2 Part or Identifying Number (PIN). The complete PIN will be in the following form:

13015	-05
Drawing number	Dash number (see table I)

2. APPLICABLE DOCUMENTS

2.1 General. The documents listed in this section are specified in sections 3, 4, and 5 of this specification. This section does not include documents cited in other sections of this specification or recommended for additional information or as examples. While every effort has been made to ensure the completeness of this list, document users are cautioned that they must meet all specified requirements of documents cited in sections 3, 4, and 5 of this specification, whether or not they are listed.

2.2 Government documents.

2.2.1 Specifications, standards, and handbooks. The following specifications, standards, and handbooks form a part of this document to the extent specified herein. Unless otherwise specified, the issues of these documents are those cited in the solicitation or contract.

DEPARTMENT OF DEFENSE SPECIFICATIONS

MIL-DTL-3933 - Attenuators, Fixed, Space Level, Non-Space Level, General Specification for.

(Copies of these documents are available online at https://assist.dla.mil/quicksearch or from the DLA Document Service Order Desk, 700 Robbins Avenue, Building 4D, Philadelphia, PA 19111-5094.)

2.3 Order of precedence. Unless otherwise noted herein or in the contract, in the event of a conflict between the text of this document and the references cited herein (except for related specification sheets), the text of this document takes precedence. Nothing in this document, however, supersedes applicable laws and regulations unless a specific exemption has been obtained.

3. REQUIREMENTS

3.1 Interface and physical dimensions. The interface and physical dimensions shall be as specified in MIL-DTL-3933 and herein (see figure 1).

3.1.1 Pure tin. The use of pure tin, as an underplate or final finish is prohibited both internally and externally. Tin content of capacitor components and solder shall not exceed 97 percent, by mass. Tin shall be alloyed with a minimum of 3 percent lead, by mass (see 6.3).

3.2 Rated temperature. -55°C to +125°C.

3.3 Maximum weight. 5 ounces.

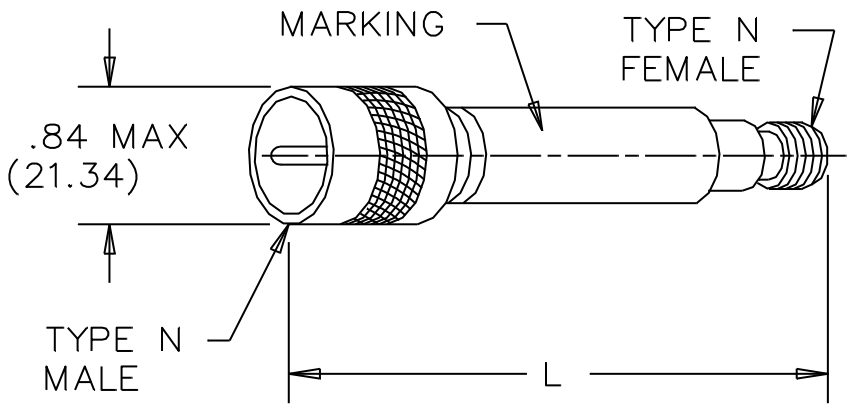

NOTES:
1. Dimensions are in inches.
2. Metric equivalents are given for general information only.
3. Metric equivalents are in parentheses.
4. Dimension L is listed in table I.

FIGURE 1. Dimensions and configuration.

3.4 Electrical characteristics.

3.4.1 Nominal impedance. 50 ohms.

3.4.2 Attenuation: See table I. Stability and sensitivity:

Maximum attenuation change after:	Up to 10 dB, inclusive (dB)	Over 10 dB (dB/dB)
Temperature change/ thermal shock	0.05	0.005
Vibration or shock	0.1	0.01
Moisture resistance or salt spray	0.2	0.02
Peak power	0.05	0.005

Frequency sensitivity, maximum: 0.1 dB/dB/GHz.
Temperature sensitivity of attenuation, maximum: 0.0004 dB/dB/°C.

3.4.3 Power. See table I. Power sensitivity for full input power, maximum: 0.005 dB/dB/Watt.

3.4.4 VSWR. See table I.

3.4.5 Connector repeatability. Maximum variation in attenuation: 0.02 dB.

3.5 Engineering data.

3.5.1. Operating frequency range. DC to 12.4 GHz.

3.5.2 Test frequency range.

3.5.2.1 For VSWR and attenuation measurements, measured or recorded, when using an Automatic Network Analyzer (ANA) or equivalent test equipment: 100 MHz (or lower) to 12.4 GHz.

3.5.2.2 Basic test frequency for sensitive measurements like connector repeatability, temperature sensitivity, power sensitivity and any other measurements where a 'delta' specification is imposed: 6.0 GHz

TABLE I. Electrical characteristics.

Dash number	Attenuation (dB)		Maximum power Input		VSWR maximum 1/			Dimension L (inches) Maximum
	Nominal	Deviation DC to 12.4 GHz	AV (W) at 25°C (continuously)	Peak (kW)	DC to 4.0 GHz	4.0 to 8.0 GHz	8.0 to 12.4 GHz	
05	30	±0.8	2 2/	1 3/	1.15:1	1.20:1	1.25:1	2.70 (68.58)

1/ VSWR value is for both ends.
2/ Power input is derated linearly to 0 watts at +125°.
3/ Peak power for a duty cycle of 5×10^{-4}; maximum pulse duration 5 microseconds.

3.6 Marking. In accordance with MIL-DTL-3933, except the attenuator shall be marked with the PIN as specified herein (see 1.2).

13015-05 - Drawing PIN
12345 - Manufacturer's source code or logo
1305 - Date code
XXXX - Serialization

3.7 Manufacturer eligibility. To be eligible for listing as an approved source of supply, a manufacturer shall be listed on the MIL-DTL-3933 Qualified Products Database for at least one part, or provide evidence that their parts have passed the qualification requirements of MIL-DTL-3933.

3.8 Certificate of compliance. A certificate of compliance shall be required from manufacturers requesting to be an approved source of supply.

3.9 Recycled, recovered, or environmentally preferable materials. Recycled, recovered, or environmentally preferable materials should be used to the maximum extent possible provided that the material meets or exceeds the operational and maintenance requirements, and promotes economically advantageous life cycle costs.

3.10 Workmanship. The attenuator shall be uniform in quality and free from any defects that will affect life, serviceability, or appearance.

4. VERIFICATION

4.1 Qualification inspection. Qualification inspection is not required.

4.2 Conformance inspection.

4.2.1 Inspection of product for delivery. Inspection of product for delivery shall consist of the group A inspection of MIL-DTL-3933.

5. PACKAGING

5.1 Packaging. For acquisition purposes, the packaging requirements shall be as specified in the contract or order (see 6.2). When packaging of materiel is to be performed by DoD or in-house contractor personnel, these personnel need to contact the responsible packaging activity to ascertain packaging requirements. Packaging requirements are maintained by the Inventory Control Point's packaging activities within the Military Service or Defense Agency, or within the military service's system commands. Packaging data retrieval is available from the managing Military Department's or Defense Agency's automated packaging files, CD-ROM products, or by contacting the responsible packaging activity.

6. NOTES

(This section contains information of a general or explanatory nature which may be helpful, but is not mandatory.)

6.1 Intended use. Attenuators conforming to this drawing are intended for use when military specifications do not exist and qualified military devices that will perform the required function are not available for OEM application. This drawing is intended exclusively to prevent the proliferation of unnecessary duplicate specifications, drawings, and stock catalog listings. When a military specification exists and the product covered by this drawing has been qualified for listing, this drawing becomes obsolete and will not be used for new design.

6.2 Ordering data. The contract or purchase order should specify the following:

a. Complete PIN (see 1.2).

b. Requirements for delivery of one copy of the conformance inspection data or certificate of compliance that parts have passed conformance inspection with each shipment of parts by the manufacturer.

c. Requirements for notification of change of product to the acquiring activity, if applicable.

d. Requirements for packaging and packing.

6.3 Tin whisker growth. The use of alloys with tin content greater than 97 percent, by mass, may exhibit tin whisker growth problems after manufacture. Tin whiskers may occur anytime from a day to years after manufacture and can develop under typical operating conditions, on products that use such materials. Conformal coatings applied over top of a whisker-prone surface will not prevent the formation of tin whiskers. Alloys of 3 percent lead, by mass, have shown to inhibit the growth of tin whiskers. For additional information on this matter, refer to ASTM-B545 (Standard Specification for Electrodeposited Coatings of Tin).

6.4 MIL-DTL-3933/18 replacements. The attenuators described herein are direct replacements for some of the MIL-DTL-3933/18 non-screened attenuators.

TABLE II. Replacement data.

MIL-DTL-3933/18 PIN	DLA Land and Maritime drawing PIN 13015-
M3933/18-05N	05

1/ M3933 non-screened (N) PINs may also be known without the ending N character.

6.5 Replaceability. Attenuators covered by this drawing will replace the same commercial device covered by contractor prepared specification or drawing.

6.6 Users of record. Coordination of this document for future revisions is coordinated only with the approved sources of supply and the users of record of this document. Requests to be added as a recorded user of this drawing should be in writing to: DLA Land and Maritime, ATTN: VAT, Post Office Box 3990, Columbus, OH 43218-3990, by email to tubesamps@dla.mil, or by telephone (614) 692-0551 or DSN 850-0551.

6.7 Approved sources of supply. Approved sources of supply are listed herein. Additional sources will be added as they become available. For assistance in the use of this drawing, contact DLA Land and Maritime, ATTN: VAT, Post Office Box 3990, Columbus, OH 43218-3990, by email to tubesamps@dla.mil, or by telephone (614) 692-0551 or DSN 850-0551.

Vendor	Vendor CAGE	Vendor name and address	Similar designation 1/
A	93459	Aeroflex/Weinschel Corporation 5305 Spectrum Drive Fredrick, MD 21703-7339	10146-30
B	95077	SV Microwave 2400 Centrepark West Drive Suite 100 West Palm Beach, FL 33409-6469	SF0950-6002-05

1/ Parts must be purchased to the DLA Land and Maritime PIN to assure that all performance requirements and tests are met.