REVISIONS			
LTR	**DESCRIPTION**	**DATE**	**APPROVED**
A	Figures 3 and 4 changed tolerances on 1.30 dimension from ± .010 to ± .10. Changed e-mail address for comments.	6 June 2008	Abdo Abdouni
B	Page 5 added see note 8 to figure 5. Page 6 clarified perforations to detail A, note 5 removed MIL-STD-278 and replaced with MIL-STD-22, added note 8, table I correct welding method and welding wire call-out. Editorial changes throughout.	29 May 2009	Abdo Abdouni

Prepared in accordance with ASME Y14.100

Detail Drawing

REV																		
PAGE																		
REV STATUS OF PAGES	**REV**		B	B	B	B	B	B	B	B								
	PAGE		1	2	3	4	5	6	7	8								

PMIC N/A	**PREPARED BY** William Carpenter	**DEFENSE SUPPLY CENTER, COLUMBUS COLUMBUS, OHIO 43218-3990**
Original date of drawing 19 March 2008	**CHECKED BY** Ernest Brown	**TITLE**
	APPROVED BY Abdonasser M. Abdouni	**STRAINER ELEMENT**
	SIZE A / **CAGE CODE** 16236	**DWG. NO.** **08008**
	REV B	**PAGE** 1 OF 8

AMSC N/A

4730-F004-001

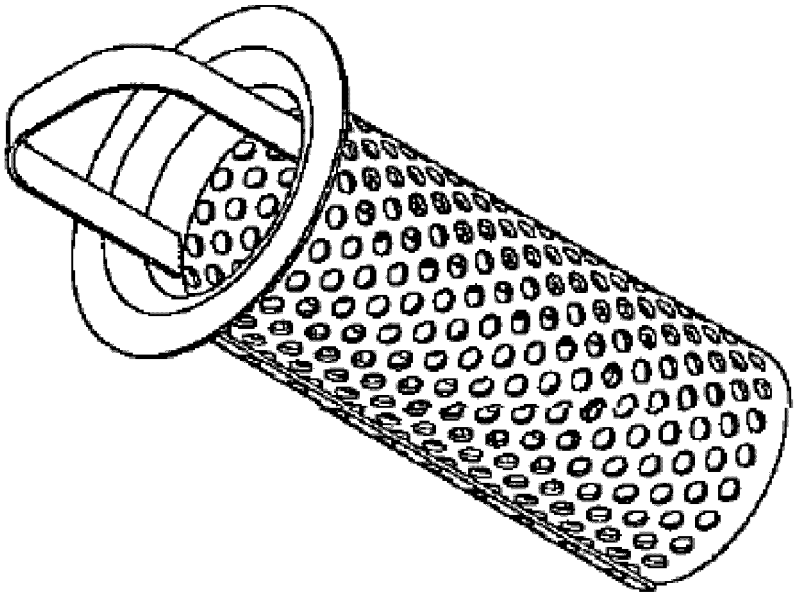

FIGURE 1. Strainer element.

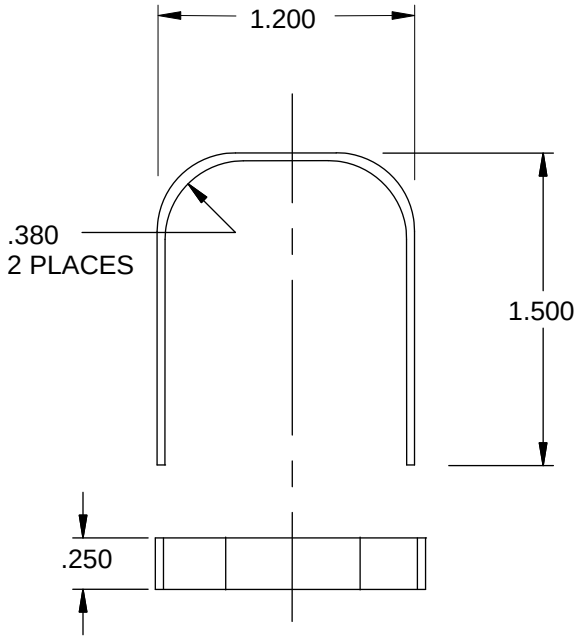

Inches	mm
.250	6.35
.380	9.65
1.20	30.5
1.500	38.10

NOTES:
1. Dimensions are in inches.
2. Metric equivalents are given for information only.
3. Unless otherwise specified tolerance is ±.015 inch (0.38 mm).
4. Break all sharp edges.

FIGURE 2. Handle.

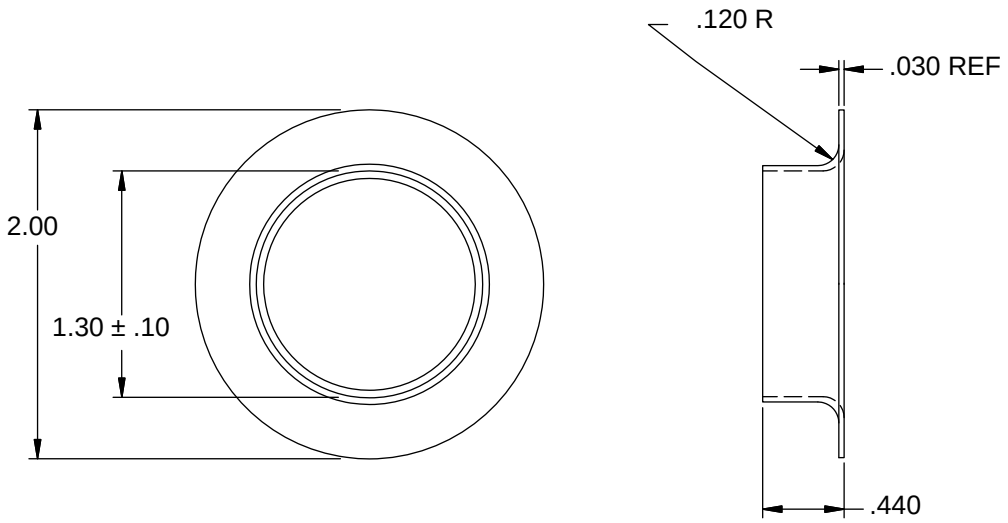

Inches	mm
.10	2.5
.030	0.76
.120	3.05
.440	11.18
1.30	33.0
2.00	50.8

NOTES:
1. Dimensions are in inches.
2. Metric equivalents are given for information only.
3. Unless otherwise specified tolerance is ±.015 inch (0.38 mm).
4. Break all sharp edges.

FIGURE 3. Flange, top.

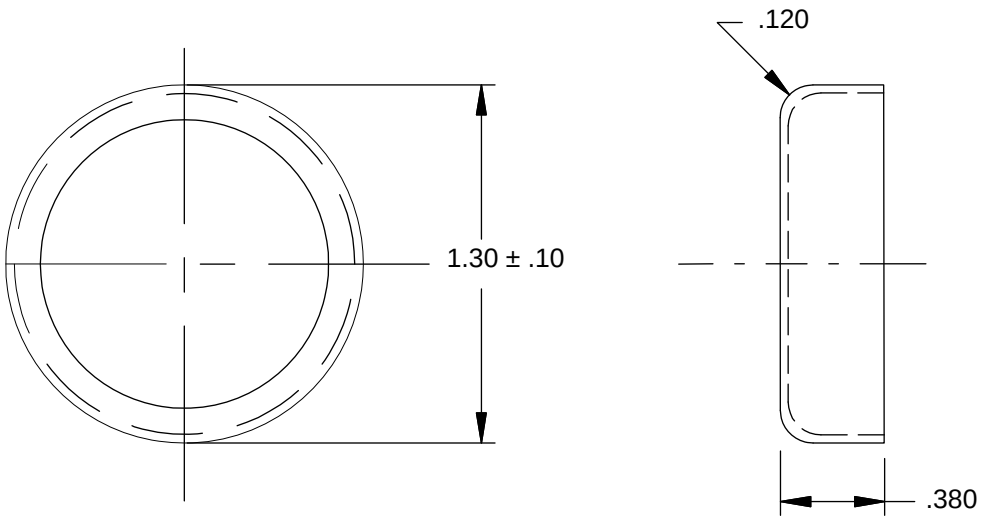

Inches	mm
.10	2.5
.120	3.05
.380	9.65
1.30	33.0

NOTES:
1. Dimensions are in inches.
2. Metric equivalents are given for information only.
3 Unless otherwise specified tolerance is ±.015 inch (0.38 mm).
4. Break all sharp edges.

FIGURE 4. Flange, bottom.

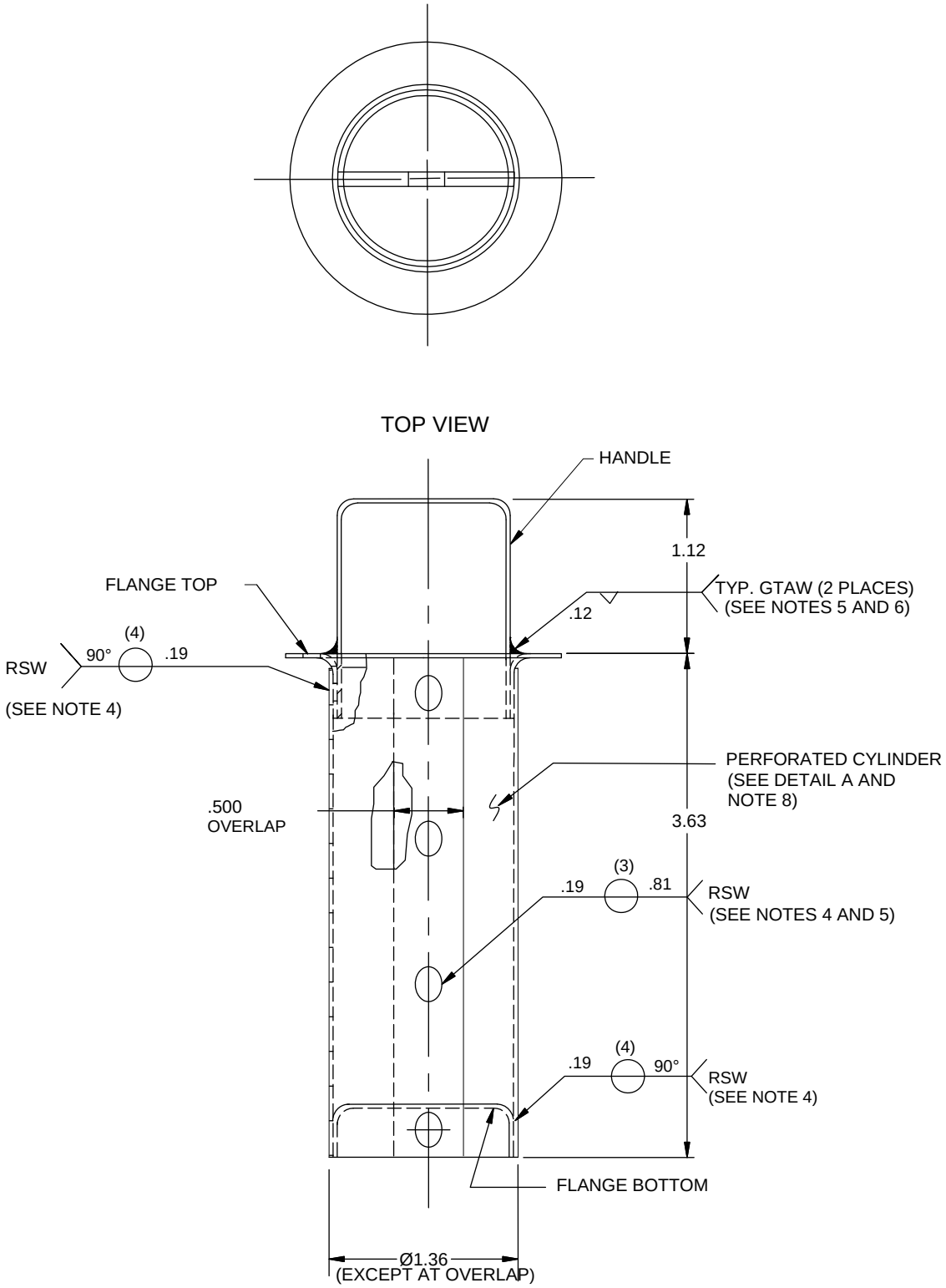

FIGURE 5. Strainer element.

DEFENSE SUPPLY CENTER, COLUMBUS **COLUMBUS, OH 43218-3990**	SIZE **A**	CAGE CODE **16236**	DWG NO. **08008**
		REV **B**	PAGE **5**

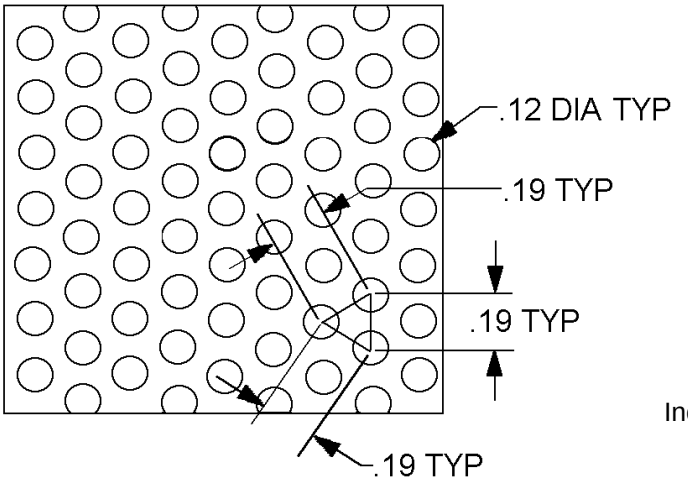

DETAIL A - A

Inches	mm
.12	3.1
.19	4.8
.500	12.70
.81	20.6
1.12	28.5
1.36	34.5
3.63	92.2

NOTES:
1. Dimensions are in inches.
2. Metric equivalents are given for information only.
3. Unless otherwise specified tolerance is ± .015 inch (0.38 mm).
4. Resistance spot weld (RSW) in accordance with American Welding Society AWS D17.2.
5. Gas tungsten arc welding (GTAW) in accordance with MIL-STD-22.
6. Perforated cylinder form over mandrel and center spot welds on seam.
7. Remove all weld spatters and break all sharp edges.
8. Perforations in accordance with Industrial Perforations Association (IPA) pattern 113.

FIGURE 5. Strainer element - Continued.

REQUIREMENTS:

Dimensions and configurations: See figures 1, 2, 3, 4, and 5.

Dissimilar metals. Dissimilar metals (as specified in MIL-STD-889) shall not be used in the fabrication of this strainer.

Material: Nickel copper alloy in accordance with QQ-N-281, class A, form 4, as rolled sheet, .030 inch (0.76 mm) thick.

Welding wire shall be as specified in table I.

TABLE I. Welding wire.

Welding process	Form	Type	Specification
TIG or GTAW	Wiring in straight lengths or spools	MIL-RN60	MIL-E-21562

Preparation for welding:

All traces of the elements which cause cracking (sulphur, phosphorus, lead etc) shall be removed. This includes crayons, paints, temperature indication markers, cutting fluids, oil and grease. Fittings of other alloys, such as gunmetal - copper-tin-zinc alloy - are also a source of detrimental elements and shall not be welded to copper-nickel alloys.

The joint area shall be thoroughly cleaned before welding starts. The weld preparation, and an adjacent area on either side of the preparation shall be degreased and any markings removed. Uncontaminated organic solvents should be applied with clean cloths and the area dried. The appearance of the cloths used for drying is a useful indicator of cleanliness: they should be free of any residue.

Stainless steel brushes shall be used and tools such as grinding discs shall not be used on Cu-Ni alloys if they have been used on other materials.

Workmanship. Strainer elements shall be free from cracks, laps, burrs, or any other defects that may detrimentally affect their intended use.

Recycled, recovered, or environmentally preferable materials: Recycled, recovered, or environmentally preferable materials should be used to the maximum extent possible, provided that the material meets or exceeds the operational and maintenance requirements, and promotes economically advantageous life cycle costs.

Part or Identifying Number (PIN): The complete PIN shall be constructed using the following format:

08008	-1
DSCC Requirement drawing	Dash number

Packaging. For acquisition purposes, the packaging requirements shall be as specified in the contract or order (see acquisition requirements). When packaging of materiel is to be performed by DoD or in-house contractor personnel, these personnel need to contact the responsible packaging activity to ascertain packaging requirements. Packaging requirements are maintained by the Inventory Control Point's packaging activities within the Military Service or Defense Agency, or within the military service's system commands. Packaging data retrieval is available from the managing Military Department's or Defense Agency's automated packaging files, CD-ROM products, or by contacting the responsible packaging activity.

DSCC drawing use. Strainer elements in accordance with this drawing are intended for use when military specifications do not exist and qualified military strainer elements that will perform the required function are not available for OEM application. This drawing is intended exclusively to prevent the proliferation of unnecessary duplicate specifications, drawings, and stock catalog listings.

Acquisition requirements. Acquisition documents should specify the following:

a. Complete PIN.

b. Requirements for delivery of one copy of the quality conformance inspection data pertinent to the strainer element inspection lot to be supplied with each shipment by the manufacturer, if applicable.

c. Requirements for notification of change of product or process to contracting activity, if applicable.

d. Packaging requirements.

Comments. Comments on this drawing should be directed to Defense Supply Center, Columbus, ATTN: DSCC-VAI, P.O. Box 3990 Columbus, Ohio 43218-3990 or telephone (614) 692-0565, facsimile (614) 692-6940 or emailed to FluidFlow@dla.mil.

Supersession data. DSCC drawing 08008-1 replaces Defense Construction Supply Center (16236) drawing CS4730-SV-0735.