REVISIONS			
LTR	**DESCRIPTION**	**DATE**	**APPROVED**
A	Vendor recommended changes. Current DoD requirements. Editorial requirements throughout	6 Aug 2009	M. Radecki
B	Vendor address change. Add new vendor. Editorial changes throughout.	1 Mar 2013	M. Radecki
C	Change vendor's CAGE code. Add QR code. Editorial changes throughout.	12 Feb 2016	M. Radecki

CURRENT DESIGN ACTIVITY CAGE CODE 037Z3
HAS CHANGED NAMES TO:
DLA LAND AND MARITIME
COLUMBUS, OHIO 43218-3990

Prepared in accordance with ASME Y14.100

REV STATUS OF PAGES	REV	C	C	C	C	C	C	C	C									
	PAGES	1	2	3	4	5	6	7	8									

PMIC N/A	**PREPARED BY** Jesus V. Garcia III	**DEFENSE SUPPLY CENTER, COLUMBUS COLUMBUS, OH**
Original date of drawing 1 November 2007	**CHECKED BY** Andrew R. Ernst	**TITLE** RESISTOR, CHIP, FIXED, BULK METAL FOIL, ULTRA PRECISION, STYLE 0805
	APPROVED BY Michael A. Radecki	
	SIZE A / **CODE IDENT. NO.** 037Z3	**DWG NO.** 07024
	REV C	**PAGE** 1 OF 8

1. SCOPE

1.1 Scope. This drawing describes the requirements for a bulk metal foil, ultra precision, chip resistor, style 0805.

1.2 Part or Identifying Number (PIN). The complete PIN is as follows:

07024	-	******	*	*
Drawing number		Resistance value (see 3.3.1)	Power rating (see 3.3.3)	Tolerance (see 3.3.4)

2. APPLICABLE DOCUMENTS

2.1 Government documents.

2.1.1 Specifications and standards. The following specifications, standards and handbooks form a part of this document to the extent specified herein. Unless otherwise specified, the issues of these documents are those listed in the cited in the solicitation or contract (see 6.2).

DEPARTMENT OF DEFENSE SPECIFICATION

MIL-PRF-55342 - Resistor, Chip, Fixed, Film, Nonestablished Reliability, Established Reliability, Space Level, General Specification for.

DEPARTMENT OF DEFENSE STANDARDS

MIL-STD-690 - Failure Rate Sampling Plans and Procedures.

MIL-STD-790 - Standard Practice for Established Reliability and High Reliability Qualified Products List (QPL) Systems for Electrical, Electronic, and Fiber Optic Parts Specifications.

* (Copies of these documents are available online at http://quicksearch.dla.mil/.)

2.2 Order of precedence. Unless otherwise noted herein or in the contract, in the event of a conflict between the text of this document and the references cited herein (except for related specification sheets), the text of this document takes precedence unless otherwise noted. Nothing in this document, however, supersedes applicable laws and regulations unless a specific exemption has been obtained.

3. REQUIREMENTS

3.1 Item requirements. The individual item requirements shall be as specified herein.

3.2 Interface and physical dimensions. The interface and physical dimensions shall be as specified in MIL-PRF-55342 and herein (see figure 1). Passivation is not applicable, however, a protective coating over the element shall be provided.

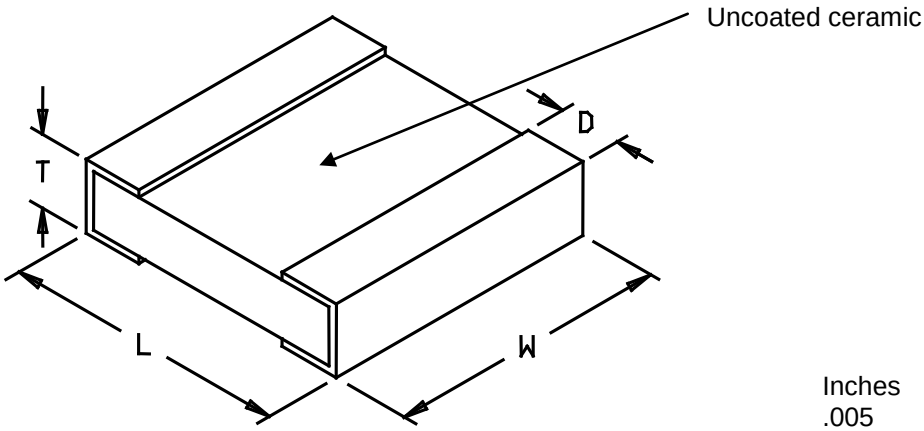

BOTTOM VIEW

L	W	T	D
.080 ±.005	.050 ±.005	.025 MAX	.015 ±.005

Inches	mm
.005	0.13
.015	0.38
.025	0.64
.050	1.27
.080	2.03

NOTES:
1. Dimensions are in Inches. Metric equivalents are given for general information only.
2. The pictorial view of the styles above is given as representative of the envelope of the item. Slight deviations from the outline shown, which are contained within the envelope and do not alter the functional aspects of the device, are acceptable.
3. Tolerances shall be +/- 0.005 inch (+/- 0.13 mm) unless otherwise specified.
4. The bottom view shown above represents the mounting side.

FIGURE 1. Chip resistor.

3.3 Electrical characteristics

3.3.1 Resistance. The nominal resistance expressed in ohms is identified by six characters, consisting of five digits and a letter. The letter is used simultaneously as a decimal point and as a multiplier. For resistance values:

a. Greater than or equal to 1 ohm but less than 1,000 ohms, the letter "R" is used to represent a decimal point.

b. Greater than or equal to 1,000 ohms but less than 1 megohm, the letter "K" is used to denote that a decimal point is located three places to the right.

All digits preceding and following the letters (R or K) of the group represent significant figures. The resistance value designations are shown in table I. Minimum and maximum resistance values shall be as specified in 3.3.2.

TABLE I. Designation of resistance values.

Designation				Resistance ohms			
10R000	to	99R999	incl.	10	to	99.999	incl.
100R00	to	999R99	incl.	100	to	999.99	incl.
1K0000	to	7K0000	incl.	1000	to	7,000	incl.

3.3.2 Resistance range and resistance temperature characteristic. The resistance range shall be from 10 ohms to 7 kilohms. The corresponding resistance temperature characteristic is specified in table II.

TABLE II. Resistance range and resistance temperature characteristic.

Resistance range (in ohms)	Resistance Temperature Characteristic (RTC) in ppm/^{O}C	Power rating (see 3.3.3)
250 - 12K	± 4	A 1/
50 - < 250	± 5	
25 - < 50	± 6	
10 - < 25	± 8	
100 - 12K	± 2	B 1/
50 - < 100	± 3	
10 - < 50	± 4	
250 - 7K	± 4	C
50 - < 250	± 5	
25 - < 50	± 6	
10 - < 25	± 8	
100 - 7K	± 3	D
50 - < 100	± 4	
10 - < 50	± 5	

1/ Inactive for new design with corresponding resistance range and RTC.

3.3.3 Power rating and maximum continuous working voltage. The power rating is at 70°C derated to +150°C at zero power (see figure 2) and is specified in table III.

TABLE III. Power rating and maximum continuous working voltage.

Symbol	Maximum power rating (mWatts)	Voltage (in volts)
A 1/	100	$E=\sqrt{PR}$
B 1/	200	E = Voltage
C	100	P = Power
D	200	R = Resistance

1/ Inactive for new design

3.3.4 Resistance tolerance. Resistors are available in resistance tolerances as specified in table IV.

TABLE IV. Resistance tolerance.

Symbol	Resistance tolerance percent	Available resistance range (in Ohms)
T 1/	± 0.01	250 to 12K
Q	± 0.02	
A	± 0.05	100 to 7K
B	± 0.1	50 to 7K
C	± 0.25	25 to 7K
D	± 0.5	10 to 7K
F	± 1.0	

1/ Inactive for new design

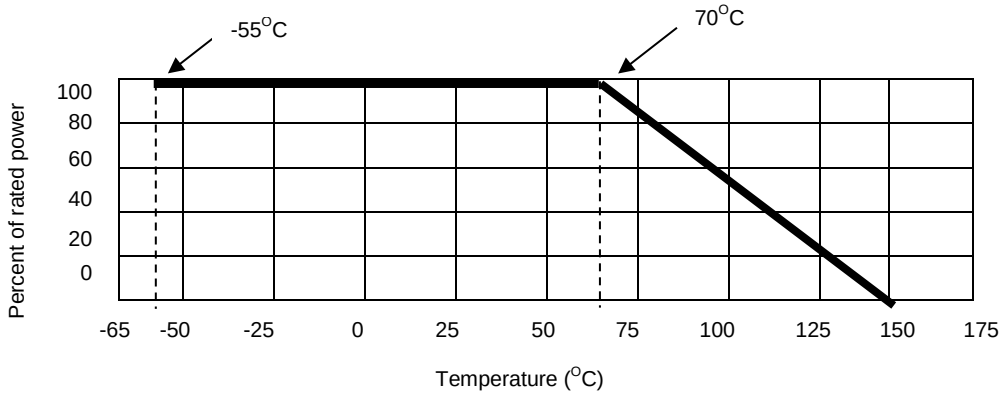

FIGURE 2. Derating curve.

3.3.5 Termination. The termination material shall be in accordance with MIL-PRF-55342, code letter B.

3.3.5.1 Pure tin. The use of pure tin, as an underplate or final finish, is prohibited both internally and externally. Tin content of resistor components and solder shall not exceed 97 percent, by mass. Tin shall be alloyed with a minimum of 3 percent lead, by mass (see 6.3).

3.4 Thermal shock. When resistors are tested as specified in MIL-PRF-55342 for thermal shock the change in resistance shall not exceed ±0.03 percent +0.01 ohm.

3.5 Low temperature operation. When resistors are tested as specified in MIL-PRF-55342 for low temperature operation the change in resistance shall not exceed ±0.03 percent +0.01 ohm.

3.6 Short time overload. When resistors are tested as specified in MIL-PRF-55342 for short time overload the change in resistance shall not exceed ±0.02 percent +0.01 ohm.

3.7 High temperature exposure. When resistors are tested as specified in MIL-PRF-55342 for high temperature exposure the change in resistance shall not exceed ±0.03 percent +0.01 ohm.

3.8 Resistance to soldering heat. When resistors are tested as specified in MIL-PRF-55342 for resistance to soldering heat the change in resistance shall not exceed ±0.02 percent +0.01 ohm.

3.9 Moisture resistance. When resistors are tested as specified in MIL-PRF-55342 for moisture resistance the change in resistance shall not exceed ±0.1 percent +0.01 ohm.

3.10 Life. When resistors are tested as specified in MIL-PRF-55342 for life the change in resistance shall not exceed ±0.05 percent +0.01 ohm.

3.11 Resistance temperature characteristic. When resistors are tested as specified in MIL-PRF-55342 the RTC shall not exceed the values specified (see 3.3.2).

3.12 Marking. Marking is not required on this resistor; however, each waffle pack and each unit package shall be marked with the PIN assigned herein (see 1.2), the manufacturer's identification code, the date code, and the lot code. At the option of the manufacturer, the resistor may be marked (i.e., laser, color dot, etc.). The marking shall remain legible after all tests.

3.13 Manufacturer eligibility. To be eligible for listing as an approved source of supply, a manufacturer shall be listed on the MIL-PRF-55342 Qualified Product List for at least one part, or perform the group A and group B inspections specified herein on a sample of parts agreed upon by the manufacturer and DLA Land and Maritime-VAT.

3.13.1 Certificate of compliance. A certificate of compliance shall be required from manufacturers requesting to be listed as approved sources of supply.

* 3.14 Recycled, recovered, environmentally preferable or biobased materials. Recycled, recovered, environmentally preferable or biobased materials should be used to the maximum extent possible provided that the materials meet or exceed the operational and maintenance requirements, and promote economically advantageous life cycle costs.

3.15 Workmanship. Resistors shall be processed in such a manner as to be uniform in quality and be free from defects that will affect life, serviceability, or appearance.

4. VERIFICATION

4.1 Product assurance program. The product assurance program specified in MIL-PRF-55342 and maintained in accordance with MIL-STD-790 is not applicable to this document.

4.2 Qualification inspection. Qualification inspection is not applicable to this document.

4.3 Product level qualification. The product level qualification specified in MIL-PRF-55342 and MIL-STD-690 is not applicable to this document.

4.4 Conformance inspection.

4.4.1 Inspection of product for delivery. Inspection of product for delivery shall consist of group A inspection (ER level only. PPM reporting, subgroup 1, and subgroup 3, are not applicable) and group B inspection of MIL-PRF-55342.

4.4.1.1 Certification. The procuring activity may accept a certificate of compliance in lieu of Group B inspection.

5. PACKAGING

5.1 Packaging. For acquisition purpose, the packaging requirements shall be as specified in the contract or order (see 6.2). When packaging of materiel is to be performed by DoD or in-house contractor personnel, these personnel need to contact the responsible packaging activity to ascertain packaging requirements. Packaging requirements are maintained by the Inventory Control Point's packaging activities within the Military Service or Defense Agency, or within the military services system commands. Packaging data retrieval is available from the managing Military Department's or Defense Agency's automated packaging files, CD-ROM products, or by contacting the responsible packaging activity.

6. NOTES

(This section contains information of a general or explanatory nature that may be helpful, but is not mandatory.)

6.1 Intended use. Chip resistors are intended to be used in thick or thin film circuits where microcircuity is intended, also, for use in surface mounting application.

6.2 Ordering data. The contract or purchase order should specify the following:

a. Complete PIN (see 1.2).

b. Requirements for delivery: One copy of the conformance inspection data or a certificate of compliance that parts have passed conformance inspection with each shipment of parts by the manufacturer.

c. Packaging requirements (see 5.1). (i.e. Electrostatic discharge sensitive packaging).

d. Whether the manufacturer performs the group B tests or provides certificate of compliance with group B (see 4.4.1.1).

6.3 Tin whisker growth. The use of alloys with tin content greater than 97 percent, by mass, may exhibit tin whisker growth problems after manufacture. Tin whiskers may occur anytime from a day to years after manufacture and can develop under typical operating conditions, on products that use such materials. Conformal coatings applied over top of a whisker-prone surface will not prevent the formation of tin whiskers. Alloys of 3 percent lead, by mass, have shown to inhibit the growth of tin whiskers. For additional information on this matter, refer to ASTM-B545 (Standard Specification for Electrodeposited Coatings of Tin).

6.4 Tolerance caution. Soldering temperature used during installation may cause resistance to shift up to 0.05 %.

6.5 Recommended mounting. A low profile solder fillet is recommended (25 percent to 85 percent of chip "T" dimension). IR, vapor phase, and convection reflow are recommended. The resistance element must be mounted in the up position to prevent failure of the part.

6.6 Electrostatic charge. Under several combinations of conditions, these resistors can be electrically damaged, by electrostatic charges, and drift from specified value. Users should consider this phenomena when ordering or shipping resistors. Direct shipment to Government is controlled by MIL-DTL-39032 that specifies a preventative packaging procedure.

6.7 Pulse applications. Designers are CAUTIONED on using these resistors in pulse applications. Since they have not been qualified nor tested for such applications, damage and premature failure are possible. These resistors only see a one time pulse (Short-time overload) as part of the group B inspection.

6.8 Users of record. Coordination of this document for future revisions is coordinated only with the approved sources of supply and the users of record of this document. Requests to be added as a recorded user of this drawing may be achieved on-line at resistor@dla.mil or in writing to: DLA Land and Maritime, ATTN: VAT, P.O. Box 3990, Columbus, OH 43218-3990 or by telephone (614) 692-8754 or DSN 850-8754.

* 6.9 Approved sources of supply. Approved sources of supply are listed herein. Additional sources will be added as they become available. Assistance in the use of this drawing may be obtained on on-line at resistor@dla.mil or contact DLA Land and Maritime, ATTN: VAT, P.O. Box 3990, Columbus, OH 43218-3990, or by telephone (614) 692-8754 or DSN 850-8754.

DLA Land and Maritime drawing PIN	Vendor similar designation or type number 1/	Vendor CAGE	Vendor name and address
07024-******A* 2/ 07024-******B* 2/ 07024-******C* 07024-******D*	VSM0805******** VSMP0805********	0066A	Vishay Precision Group, Inc. 3 Great Valley Parkway Suite 150 Malvern, PA 19355 Plants: Vishay Advanced Technologies, Ltd. 2 Dr. Felix Zandman Street Holon 58125, Israel
07024-******A* 2/ 07024-******B* 2/ 07024-******C* 07024-******D*	TSM0805**********B TSMP0805**********B	2X034	Texas Components Corp. 1716 W. Sam Houston Parkway N. Houston, TX 77043-2723
07024-******A* 2/ 07024-******B* 2/ 07024-******C* 07024-******D*	VSM0805******** VSMP0805********	OKUU5	Wilbrecht LEDCO, Inc. 155 Waibel Drive, NE, Huron, SD 57350

1/ Parts must be purchased to the DLA Land and Maritime PIN to assure that all performance requirements and test are met.
2/ Inactive for new design.