REVISIONS			
LTR	**DESCRIPTION**	**DATE**	**APPROVED**
A	Modifications to agree with SAE-AS22759/88. Editorial changes throughout. Update format.	6/22/07	Lee Suroweic
B	Added approved supplier. Technical modifications to agree with SAE-AS22759/88. Editorial changes throughout. Added approved supplier. New paragraph 3.3.1.1; pure tin.	30 March 2009	Abdo Abdouni
C	Added approved supplier.	8 September 2010	Abdo Abdouni
D	Technical modifications to agree with SAE-AS22759. Add SAE- AS22759/188. Increase 2 to 3 J/g. Updated Table I finish wire weight. Amended the government and non-government contact information. Removed ASME Y14.100 and selected item drawing. Vendor name change. .	5 May 2016	Abdo Abdouni

CURRENT DESIGN ACTIVITY CAGE CODE
037Z3 HAS CHANGED NAMES TO:
DLA LAND AND MARITIME
COLUMBUS, OHIO 43218-3990

REV																		
PAGE																		
REV STATUS OF PAGES	**REV**		D	C	C	C	C	C	C	C	C	D	D					
	PAGE		1	2	3	4	5	6	7	8	9	10	11					

PMIC	**PREPARED BY** William Carpenter	**DEFENSE SUPPLY CENTER, COLUMBUS** **COLUMBUS, OHIO 43218-3990**
Original date of drawing 12 July 2004	**CHECKED BY** Lee Surowiec **APPROVED BY** Richard L. Taylor	**TITLE** **WIRE, ELECTRICAL, COMPOSITE, POLYTETRAFLUOROETHYLENE/POLYIMIDE INSULATED, SMOOTH SURFACE, NORMAL WEIGHT, TIN COATED, COPPER CONDUCTOR, 150°C, 600 VOLT**
	SIZE **A** / **CAGE CODE** **037Z3**	**DWG. NO.** **04042**
	REV **D**	**PAGE** **1** OF **11**

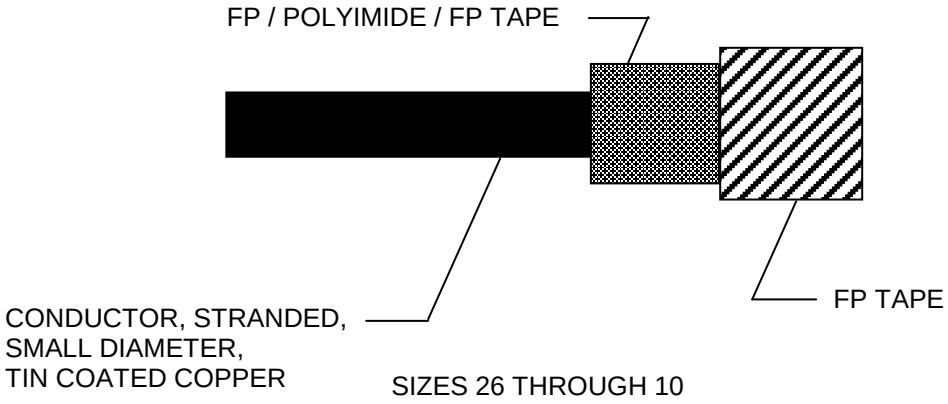

SIZES 26 THROUGH 10

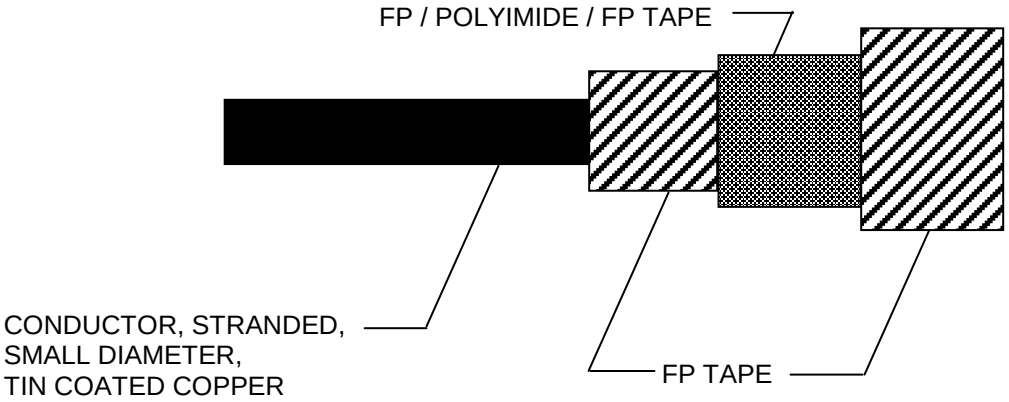

SIZES 8 THROUGH 6

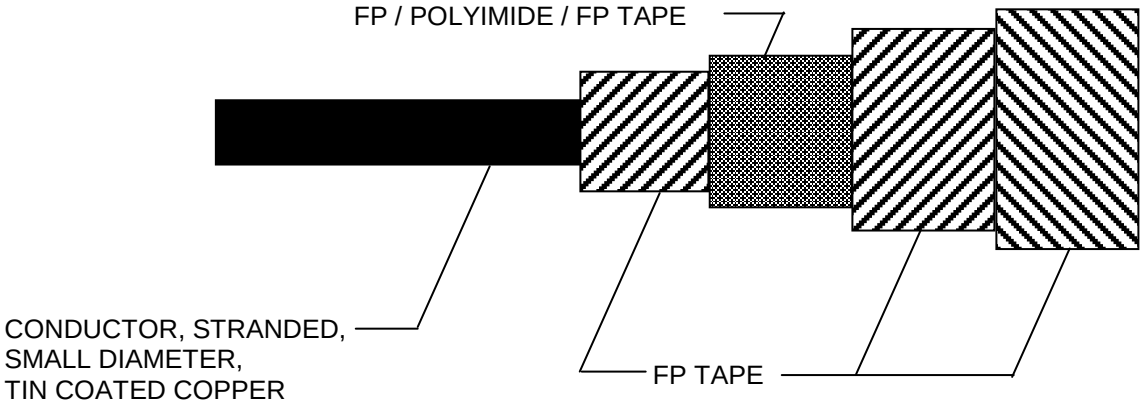

SIZES 4 THROUGH 4/0

FP – Fluorocarbon Polymer, modified Polytetrafluoroethylene (PTFE)

FIGURE 1. General configuration.

1 SCOPE

1.1 Scope. This drawing covers the performance characteristics for a composite wire using a seamless polytetrafluoroethylene/hydrolysis resistant polyimide tape wrap insulation system, with a normal weight stranded conductor.

1.2 Part or Identifying Number (PIN). The complete PIN should be as follows:

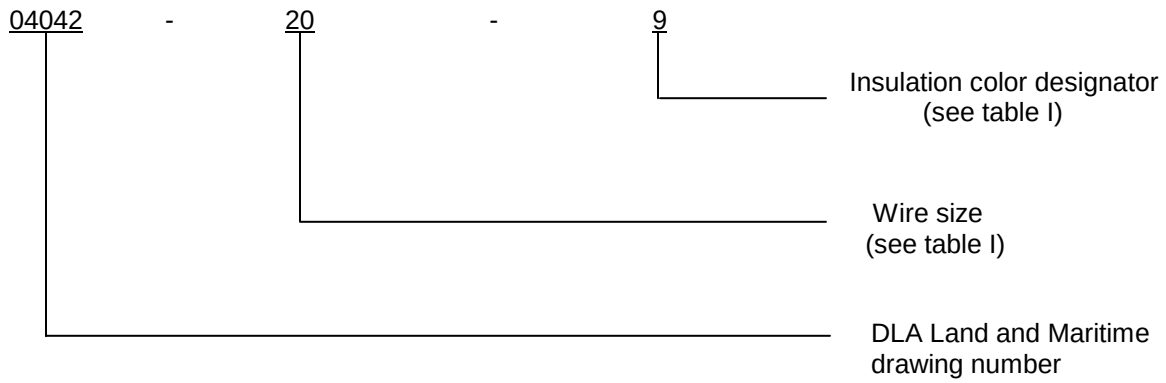

TABLE I. Details of construction (AWG conductors).

PIN	Wire size (AWG)	Conductor			Finished wire			
		Stranding (number of strands X gauge (AWG) of strands)	Diameter (inches)		Resistance at 20°C ohms/1000ft. (max)	Diameter (inches)		Weight lb/1000ft. (max)
			Min	Max		Min	Max	
04042-26-*	26	19 X 38	.0175	.0204	41.3	.033	.037	1.55
04042-24-*	24	19 X 36	.0225	.0244	26.2	.038	.042	2.20
04042-22-*	22	19 X 34	.0285	.0314	16.2	.043	.047	3.10
04042-20-*	20	19 X 32	.0365	.0394	9.88	.051	.055	4.65
04042-18-*	18	19 X 30	.0455	.0494	6.23	.061	.065	6.85
04042-16-*	16	19 X 29	.0515	.0554	4.81	.068	.073	8.70
04042-14-*	14	19 X 27	.0645	.0694	3.06	.081	.086	13.3
04042-12-*	12	37 X 28	.0835	.0894	2.02	.100	.105	20.2
04042-10-*	10	37 X 26	.106	.112	1.26	.122	.127	32.2
04042-8-*	8	133 X 29	.158	.169	.701	.180	.188	58.5
04042-6-*	6	133 X 27	.198	.212	.445	.219	.229	88.9
04042-4-*	4	133 X 25	.250	.268	.280	.276	.288	144
04042-2-*	2	665 X 30	.320	.340	.183	.344	.364	226
04042-1-*	1	817 X 30	.366	.380	.149	.388	.408	292
04042-01-*	0	1045 X 30	.395	.425	.116	.420	.450	352
04042-02-*	00	1330 X 30	.440	.475	.091	.475	.505	448
04042-03-*	000	1665 X 30	.500	.540	.071	.530	.560	544
04042-04-*	0000	2109 X 30	.565	.605	.056	.590	.630	688

* The asterisks in the PIN column of table I should be replaced by color code designators (see 1.2.2). Example: 04042-26-93 is white with an orange stripe.

1.2.2 Color. The wire insulation color should be indicated by the color designator (see 1.2) and as specified in the contract. The insulation color should be in accordance with MIL-STD-681, system 1, differentiation color coding chassis wiring (3 numbers maximum). For laser marked wires, color limits should be in accordance with MIL-STD-104, class I, or in accordance with table V of this drawing.

2. APPLICABLE DOCUMENTS

2.1 Government documents.

2.1.1 Specifications, standards, and handbooks. The following specifications, standards, and handbooks form a part of this document to the extent specified herein. Unless otherwise specified, the issues of these documents are those cited in the solicitation or contract.

DEPARTMENT OF DEFENSE STANDARDS

MIL-STD-104	-	Limits for Electrical Insulation Color
MIL-STD-681	-	Identification Coding and Application of Hookup and Lead Wire
MIL-STD-2223	-	Test Methods for Insulated Electric Wire

(Copies of these documents are available online at http://quicksearch.dla.mil)

2.2 Non-government publications. The following documents form a part of this document to the extent specified herein. Unless otherwise specified, the issues of these documents are those cited in the solicitation or contract.

ASTM INTERNATIONAL

ASTM B33	-	Standard Specification for Tinned Soft or Annealed Copper Wire for electrical Purposes
ASTM D3032	-	Standard Test Methods for Hookup Wire Insulation
ASTM D4591	-	Standard Test Method for Determining Temperatures and Heats of Transitions of Fluoropolymers by Differential Scanning Calorimetry

(Copies of these documents are available from http://www.astm.org/.)

NCSL INTERNATIONAL

NCSL Z540.3	-	Laboratories Calibration and Measuring and Test Equipment

(Copies of these documents are available from http://www.ncsli.org.)

SAE INTERNATIONAL

SAE-AS4373	-	Test Methods for Insulated Electric Wire
SAE-AS22759	-	Wire, Electrical, Fluoropolymer-Insulated, Copper or Copper Alloy
SAE-AS22759/88	-	Wire, Electrical, Polytetrafluoroethylene/polyimide Insulated, Normal Weight, Tin Coated, Copper Conductor, 150°C, 600 Volts
SAE-AS22759/188	-	Wire, Electrical, Polytetrafluoroethylene/ Polyimide Insulated, Smooth Surface, Normal Weight, Tin-Coated Copper Conductor, 150 °C, 600 Volts ROHS

(Copies of these documents are available from http://www.sae.org/).

3. REQUIREMENTS

3.1 DLA Land and Maritime requirements. Items described in this drawing shall meet the requirements of SAE-AS22759, SAE-AS22759/88, and SAE-AS22759/188 except as specified herein. Any requirements included in this drawing shall be in addition to, or supersede those requirements included in SAE-AS22759, SAE-AS22759/88, and SAE-AS22759/188. In case of conflict between the requirements in this drawing, SAE-AS22759, SAE-AS22759/88, and SAE-AS22759/188, the requirements of this drawing shall take precedence.

3.2 Design configuration. The design, construction, and physical dimensions shall be as specified in this drawing. The polyimide tape shall be hydrolysis resistant.

3.2.1 Design documentation. Design documentation shall be retained by the manufacturer and shall be available upon request for review by the contracting activity, DLA Land and Maritime, or contractor.

3.3 Material.

3.3.1 Conductor. Conductors shall be made of soft annealed copper wire in accordance with ASTM B33 and table I of this drawing. All strands shall be free from lumps, kinks, splits, scarred or corroded surfaces and skin impurities.

3.3.1.1 Pure tin. The use of pure tin is prohibited both internally and externally. Tin content of wire components, braids, jackets and solder shall not exceed 97 percent. Tin shall be alloyed with a minimum of 3 percent lead (see 6.9).

3.3.2 Insulation. Insulation shall be polytetrafluoroethylene and polytetrafluoroethylene/polyimide tape specified in tables II and III. The polyimide tape shall be hydrolysis resistant.

TABLE II. Wire insulation materials. 1/

Tape code	Thickness nominal (inches)	Material
1	.0020	.0005 FP/.0010 polyimide/.0005 FP
2	.0010	FP (Skived)
3	.0020	FP (Skived)
4	.0020	FP (Unsintered)
5	.0025	FP (Unsintered)
6	.0030	FP (Unsintered)

1/ Physical properties of PTFE unsintered tape shall be in accordance with SAE-AS22759.

TABLE III. Physical properties of FP/Polyimide/FP tapes.

Tensile strength	19,000 lb/in^2 (average min)
Tensile modulus	350,000 lb/in^2 (average min)
Elongation	40 percent (average min)
Dielectric strength	4,000 volts/mil (average min)
.0005 FP Layer	Distinguishable color (next to conductor) may be used at manufacturer's option

3.4 Wire construction and physical dimensions. See figure 1 and tables I and IV.

TABLE IV. Tape overlap requirements. 1/

Wire size	Wrap 1			Wrap 2			Wrap 3			Wrap 4			Nominal wall thickness (mils)
	Tape code	Percent overlap		Tape code	Percent overlap		Tape code	Percent overlap		Tape code	Percent overlap		
		Min	Max		Min	Max		Min	Max		Min	Max	
22	1	50.5	54.0	4	50.5	54.0	-	-	-	-	-	-	7.4
20	1	50.5	54.0	4	50.5	54.0	-	-	-	-	-	-	7.4
18	1	50.5	54.0	4	50.5	54.0	-	-	-	-	-	-	7.4
16	1	50.5	54.0	5	50.5	54.0	-	-	-	-	-	-	8.3
14	1	50.5	54.0	5	50.5	54.0	-	-	-	-	-	-	8.3
12	1	50.5	54.0	6	50.5	54.0	-	-	-	-	-	-	9.1
10	1	50.5	54.0	6	50.5	54.0	-	-	-	-	-	-	9.1
8	2	20.5	35	1	50.5	55.0	6	67.0	71.0	-	-	-	13.2
6	2	20.5	35	1	50.5	55.0	6	67.0	71.0	-	-	-	13.2
4	3	20.5	35	1	50.5	55.0	6	50.5	54.0	6	50.5	54.0	16.2
2	3	20.5	35	1	50.5	55.0	6	50.5	54.0	6	50.5	54.0	16.2
1	3	20.5	35	1	50.5	55.0	6	50.5	54.0	6	50.5	54.0	16.2
1/0	3	20.5	35	1	50.5	55.0	6	50.5	54.0	6	50.5	54.0	16.2
2/0	3	20.5	35	1	50.5	55.0	6	50.5	54.0	6	50.5	54.0	16.2

1/ Wrap 1 is innermost tape which is in contact with the conductor.

3.5 Performance testing. Wire supplied to this drawing shall be qualified in accordance with SAE-AS22759/88, SAE-AS22759/188, and shall meet any additional requirements of this drawing.

3.5.1 Wet arc propagation resistance (test required for initial qualification only). When tested in accordance with MIL-STD-2223, method 3006, the following requirements shall apply:

a. A minimum of 70 wires shall pass the impulse dielectric test of SAE-AS22759.
b. Not more than two wires shall fail the impulse dielectric test in any one bundle.
c. Actual damage to the wire shall be not more than 1.0 inch (25.4 mm) in length in any bundle when measured along the axis.

3.5.2 Solderability: Not applicable. This wire is intended for crimped connections.

3.5.3 Forced hydrolysis (test required for initial qualification only). When tested in accordance with SAE-AS4373, method 602, the minimum average performance shall be 5000 hours at 70°C. The following details shall apply:

a. Number of specimens: 5.
b. Wire size to be tested: 20 AWG.
c. A specimen is considered “failed” when it can no longer pass the dielectric test method of SAE-AS4373 method 602.
d. Average the time to failure for all of the specimens evaluated.

3.5.4 Insulation state of sinter (conformance inspection test). FP layers shall be evaluated with a differential scanning calorimeter in accordance with ASTM D4591. The FP layers shall meet the following requirements:

a. Insulation state of sinter: 3 J/g maximum.
b. Bonding between FP layers shall be homogenous. No evidence of tape edges or seams shall be present on the outer FP layer when visually examined with the unaided eye. The outer surface will be smooth and free of tape edges at the overlap.

3.5.5 Lamination sealing (conformance inspection test). When tested in accordance with SAE-AS4373, method 809 at 200°C, there shall be no evidence of tape separation or lifting. There shall be no visible tape ridges that can contribute to tearing of the tape.

3.5.6 Strippability (conformance inspection test). There shall be no evidence of separation or elongation of FP layers when stripped with standard hand held tools using proper stripping blades. No evidence of insulation shall be left on the conductor when viewed with the naked eye. The following details shall apply:

a. Test size: 26 AWG - 14 AWG wire only in accordance with ASTM D3032, section 27.
b. Length of insulation slugs shall be .25 inches (6.35 mm).
c. The strip force shall be as follows:

Wire size (AWG)	Minimum force	Maximum force
26 - 20	0.25 lbs	6.0 lbs
18 - 14	0.50 lbs	7.0 lbs

3.5.7 Durability (PTFE outer layer) (Test required for initial qualification only). When tested as specified, the wire shall withstand an average of 100 cycles without failure due to tear or surface cut through of the outer layer. The following details shall apply:

a. Wire size: 22 AWG.
b. Temperature: 23°C.
c. Weight: 300 grams (10.6 oz).
d. Edged abrading rod diameter: .026 inch (0.66 mm) nominal.
e. Test specimens shall be manufactured to emulate the wire construction specified herein, except the polyimide shall be replaced with an aluminum/Mylar film of similar thickness with the conductive (aluminum) side out. The conductive surface is used in a circuit path to determine when the abrading rod has penetrated the PTFE layer.
f. Test method:

(1) Install a .026 inch (0.66 mm) edged abrading rod with the edged surface facing down (perpendicular with the test specimen).
(2) Remove approximately 1 inch (25.4 mm) of insulation from the end of the specimen and connect the circuit detection clip to the exposed conductor.
(3) Apply the appropriate weights to the fixture.
(4) Place the abrading rod on the specimen, ensuring the rod is level and perpendicular to the specimen surface.
(5) Zero the counter on the abrasion tester.
(6) Turn the tester on. The rod will begin to oscillate over the surface of the specimen with an approximate 1 inch (25.4 mm) stroke.
(7) The test will continue until the tester detects continuity between the abrading rod and the conductor.
(8) Record the number of cycles to failure.
(9) Repeat the procedure a minimum of 10 times (100 times preferred) to generate a statistically significant sample.
(10) Average the results.

3.5.8 UV laser marking (test required for initial qualification only). When marked with an ultraviolet (UV) laser source at 1.5 J/cm^2, white FP tape shall have a contrast level of 65 percent minimum average and colored FP tape shall have a 62 percent minimum average. This requirement applies to the outer most FP insulation layer. Non-white insulation colors shall meet the Munsell color limit requirements shown in table V. Contrast level is defined as:

$$CL = \frac{\text{(Reflectance of the background insulation - Reflectance of the laser mark)}}{\text{(Reflectance of the background insulation)}}$$

3.5.9 Color (conformance inspection test). Colors shall be in accordance with MIL-STD-104, class 1, except for UV laser markable wire as shown in table V. White is the preferred background insulation color. Color conformity to the limits of MIL-STD-104 shall not be required after oven exposure.

TABLE V. Munsell color limits for UV laser markable wire.

Color	Hue		Value		Chroma	
	From	To	Min	Max	From	To
Black	2.5RN	2.5RN	7	8.5	N/A	N/A
Blue	5PB	7.5B	7	8	4	6
Green	2.5G	7.5G	7	9	2	6
Red	10RP	5R	7	8	4	6
Yellow	5Y	10Y	8	9	4	6
Brown	2.5YR	7.5R	7	9	2	4
Orange	10R	2.5YR	6	7	8	10
Violet	2.5P	7.5R	7	8	4	8
Gray	Same as black	Same as black	Same as black	Same as black	Same as black	Same as black

3.5.10 Color striping or banding durability (conformance inspection testing). Colored stripes or bands shall meet the durability of color marking requirements specified in SAE-AS22759. The following shall apply to the durability of color marking test.

a. Weight: 250 grams (8.82 oz).
b. Strokes: 250 strokes (125 cycles).

3.6 Ratings.

3.7.1 Temperature rating. 150°C maximum continuous conductor temperature.

3.6.2 Voltage rating. 600 Vrms at sea level.

3.7 Marking. The finished wire shall be identified by a printed marking applied to the outer surface or the wire. The identification mark shall not be applied by hot stamp marking or other methods which significantly penetrate the insulation. The PIN shall be in accordance with 1.2 herein.

4. VERIFICATION

4.1 Classification of inspections. The inspection requirements specified herein are classified as follows:

a. Qualification inspection (see 4.2).

b. Conformance inspection (see 4.3).

4.1.1 Equipment calibration. All test equipment and inspection facilities shall be maintained in accordance with NCSL Z540.3 or equivalent.

4.2 Qualification inspection. The product manufactured under this drawing shall be currently listed on the qualified products list QPL-22759 for wire type SAE-AS22759/88 and SAE-AS22759/188. The requirements in paragraph 3.5 shall apply.

4.3 Conformance inspection. Conformance inspection shall be in accordance with SAE-AS22759, SAE-AS22759/88, SAE-AS22759/188, and 3.5 herein.

4.4 Certification. In order to be certified and listed as an approved source of supply for wire manufactured to this drawing, a manufacturer shall:

a. Agree to make available to DLA Land and Maritime, upon request, all pertinent test data indicating compliance to the tests outlined in SAE-AS22759, SAE-AS22759/88, SAE-AS22759/188, and this drawing.
b. Provide to DLA Land and Maritime-VAI, or its designated agent, upon request, free of change and without obligation, current production samples of the types and quantities requested.
c. Meet one of the following criteria:

(1) Currently be listed on QPL-22759 for at least one wire series (not necessarily the one for which this drawing applies).

(2) Be in current production of the subject part.

4.5 Certificate of compliance. A certificate of compliance shall be required from a manufacturer in order to be listed as an approved source of supply (see 6.7).

5 PACKAGING

5.1 Packaging. For acquisition purposes, the packaging requirements shall be as specified in the contract or order (see 6.2). When packaging of materiel is to be performed by DoD or in-house contractor personnel, these personnel need to contact the responsible packaging activity to ascertain packaging requirements. Packaging requirements are maintained by the Inventory Control Point's packaging activities within the Military Service or Defense Agency, or within the military service's system commands. Packaging data retrieval is available from the managing Military Department's or Defense Agency's automated packaging files, CD-ROM products, or by contacting the responsible packaging activity.

6 NOTES

6.1 Intended use. Wires conforming to this drawing are intended for use when military specifications do not exist for wires that will perform the required function. This drawing is intended to prevent the proliferation of unnecessary duplicate specifications, drawings and stock catalog listings. When a military specification exists and the product covered by this drawing has been qualified for listing on QPL-22759, this drawing will be inactivated.

6.2 Acquisition data. The acquisition document should specify the following:

a. Complete PIN (see 1.2).

b. Requirements for delivery of a copy of the quality conformance inspection data for the lot being supplied, if applicable. This data should be supplied with each shipment.

c. Requirements for certificate of compliance, if applicable.

d. Requirements for packaging and packing.

6.3 Replaceability. Wires covered by this drawing will replace the same generic wires covered by a contractor-prepared specification or drawing.

6.4 Comments. Comments on this drawing should be directed to DLA Land and Maritime-VAI, Post Office Box 3990, Columbus, Ohio 43218-3990, or e-mail to WireCable@dla.mil, telephone (614) 692-0530, or facsimile (614) 692-6939.

6.5 Certificate of compliance. The certificate of compliance submitted to DLA Land and Maritime-VAI, prior to listing as an approved source of supply, should state that the manufacturer's product meets the requirements of this drawing.

6.6 Generic test data. Generic test data may be used to satisfy the requirements of 4.3. Generic test data should be on date coded wire no more than 1 year old when the wire is made of the same material, of the same design, and is made using the same manufacturing processes. The vendor is required to retain the generic data for a period of not less than 3 years from the date of shipment.

6.7 Approved sources of supply. Approved sources of supply are listed herein. Additional sources will be added as they become available. The vendors listed have agreed to the contents of this drawing and a certificate of compliance has been submitted to DLA Land and Maritime -VAI.

DLA Land and Maritime drawing PIN	Vendor CAGE number	Vendor similar PIN 1/	Vendor CAGE number	Vendor similar PIN 1/	Vendor CAGE number	Vendor similar PIN 1/
04042-26-*	12814	SMLJ26-*	12515	HN2T26-*	F1868	DSM8826-*
04042-24-*	12814	SMLJ24-*	12515	HN2T24-*	F1868	DSM8824-*
04042-22-*	12814	SMLJ22-*	12515	HN2T22-*	F1868	DSM8822-*
04042-20-*	12814	SMLJ20-*	12515	HN2T20-*	F1868	DSM8820-*
04042-18-*	12814	SMLJ18-*	12515	HN2T18-*	F1868	DSM8818-*
04042-16-*	12814	SMLJ16-*	12515	HN2T16-*	F1868	DSM8816-*
04042-14-*	12814	SMLJ14-*	12515	HN2T14-*	F1868	DSM8814-*
04042-12-*	12814	SMLJ12-*	12515	HN2T12-*	F1868	DSM8812-*
04042-10-*	12814	SMLJ10-*	12515	HN2T10-*	F1868	DSM8810-*
04042-8-*	12814	SMLJ8-*	12515	HN2T8-*	F1868	DSM8808-*
04042-6-*	12814	SMLJ6-*	12515	HN2T6-*	F1868	DSM8806-*
04042-4-*	12814	SMLJ4-*	12515	HN2T4-*	F1868	DSM8804-*
04042-2-*	12814	SMLJ2-*	12515	HN2T2-*	F1868	DSM8802-*
04042-1-*	12814	SMLJ1-*	12515	HN2T1-*	F1868	DSM8801-*
04042-01-*	12814	SMLJ01-*	12515	HN2T01-*	F1868	DSM88Z1-*
04042-02-*	12814	SMLJ02-*	12515	HN2T02-*	F1868	DSM88Z2-*
04042-03-*	12814	SMLJ03-*	12515	HN2T03-*	F1868	DSM88Z3-*
04042-04-*	12814	SMLJ04-*	12515	HN2T04-*	F1868	DSM88Z4-*

1/ Caution: Parts must be purchased to this DLA Land and Maritime PIN to assure that all performance requirements and tests are met.

* Color code designators in accordance with MIL-STD-681 should replace the asterisks in the PIN column of table. Example: 04042-26-93 is white with an orange stripe.

Vendor CAGE number	Vendor name and address
12814	Thermax/CDT 235 North Freeport Drive Nogales, AZ 85621-2428
12515	Nexans Aerospace USA LLC 600 South Parker Street, P.O. Box 909 Elm City, NC 27822
F1868	Draka Fileca Route Nationale 1 60730 Sainte Genevieve France

6.9 Environmentally preferable material. Environmentally preferable materials should be used to the maximum extent possible to meet the requirements of this specification. As of the dating of this document, the U.S. Environmental Protection Agency (EPA) is focusing efforts on reducing 31 priority chemicals. The list of chemicals and additional information is available on their website http://www.epa.gov/osw/hazard/wastemin/priority.htm. Included in the EPA list of 31 priority chemicals are cadmium, lead, and mercury. Use of these materials should be minimized or eliminated unless needed to meet the requirements specified herein (see Section 3).

6.9 Tin whisker growth. The use of alloys with tin content greater than 97 percent may exhibit tin whisker growth problems after manufacture. Tin whiskers may occur anytime from a day to years after manufacture, and can develop under typical operating conditions on products that use such materials. Conformal coatings applied over top of a whisker-prone surface will not prevent the formation of tin whiskers. Alloys of 3 percent lead have shown to inhibit the growth of tin whiskers (see 3.3.1.1).

6.10 Changes from previous issue. Marginal notations are not used in this revision to identify changes with respect to the previous issue due to the extensiveness of the changes.