REVISIONS

LT	DESCRIPTION	DATE	APPROVED
A	Add pure tin prohibition paragraph. Editorial changes throughout.	31 MAR 06	M. Radecki
B	Add manufacturer's eligibility paragraph. Editorial changes throughout.	30 MAY 13	M. Radecki

CURRENT DESIGN ACTIVITY CAGE CODE 037Z3
HAS CHANGED NAMES TO:
DLA LAND AND MARITIME
COLUMBUS, OHIO 43218-3990

Prepared in accordance with ASME Y14.100

REV STATUS OF PAGES																
	REV	B	B	B	B	B	B	B	B	B	B	B	B	B		
	PAGES	1	2	3	4	5	6	7	8	9	10	11	12	13		

PMIC N/A	**PREPARED BY** Andrew R. Ernst	**DEFENSE SUPPLY CENTER, COLUMBUS** **COLUMBUS, OH**
Original date of drawing 5 November 2003	**CHECKED BY** Andrew R. Ernst	**TITLE** **RESISTOR, FIXED, CARBON FILM, HIGH PULSE VOLTAGE, 3/4 WATT**
	APPROVED BY Kendall A. Cottongim	
	SIZE **A** / **CODE IDENT. NO.** **037Z3**	**DWG NO.** **03007**
	REV B	**PAGE** 1 **OF** 13

1. SCOPE

1.1 Scope. This drawing describes the requirements for a fixed, carbon film, high pulse voltage, .75 watt, resistor.

1.2 Part or Identifying Number (PIN). The complete PIN is as follows:

03007	-	***	*
Drawing number		Resistance (3.3.2) and (3.3.3)	Resistance tolerance (see 3.3.4)

2. APPLICABLE DOCUMENTS

2.1 Government documents.

2.1.1 Specifications, standards, and handbooks. The following specifications, standards, and handbooks form a part of this document to the extent specified herein. Unless otherwise specified, the issues of these documents are those cited in the solicitation or contract.

DEPARTMENT OF DEFENSE STANDARDS

MIL-STD-202 -- Tests Methods For Electronic and Electrical Components Parts
MIL-STD-810 -- Environmental Engineering Considerations and Laboratory
MIL-STD-1276 -- Leads for Electronic Components Parts
MIL-STD-1285 -- Marking of Electrical and Electronic Parts

* (Copies of these documents are available online at http://quicksearch.dla.mil or from the DLA Document Services, 700 Robbins Avenue, Building 4D, Philadelphia, PA 19111-5094.)

* 2.2 Order of precedence. Unless otherwise noted herein, or in the contract, in the event of a conflict between the text of this document and the references cited herein, the text of this document takes precedence. Nothing in this document, however, supersedes applicable laws and regulations unless a specific exemption has been obtained.

3. REQUIREMENTS

3.1 Item requirements. The individual item requirements shall be as specified herein.

3.2 Interface and physical dimensions. Resistors shall meet the interface and physical dimensions as specified herein (see figure 1).

3.3 Electrical characteristics.

3.3.1 Termination finish. Termination material shall be in accordance with MIL-STD-1276 and table I.

TABLE I. Termination finish.

Termination material in accordance with MIL-STD-1276.	
C32 -	Electroplated tin lead terminals.
C52 -	Hot solder dipped terminals. 1/

1/ Hot solder dipped available through purchase order (see 6.2e).

3.3.1.1 Pure tin. The use of pure tin, as an underplate or final finish, is prohibited both internally and externally. Tin content of resistor components and solder shall not exceed 97 percent, by mass. Tin shall be alloyed with a minimum of 3 percent, by mass (see 6.4).

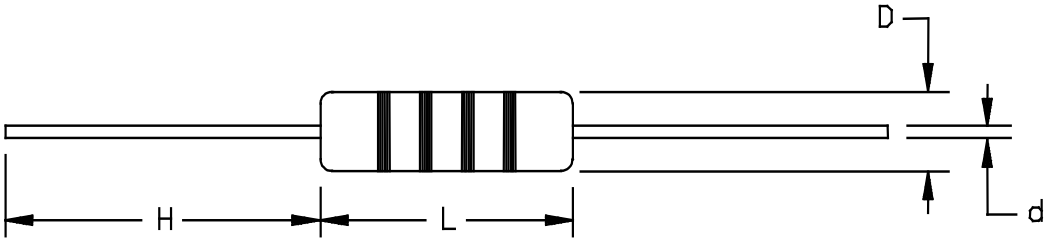

Dimension			
L	D	H	d
0.354 ±.032 (8.99 ±.81)	0.148 ±.02 (3.76 ±.51)	.980 min (25 min)	0.031 ±.003 (0.79 ±.08)

NOTES:
1. Dimensions are in inches.
2. Metric equivalents are given in parenthesis for general information only.
3. The picturization of the style above is given as a representative of the envelope item. Light deviations from the outline shown (which are contained within the envelope and do not alter the functional aspects of the device), are acceptable.

FIGURE 1. Fixed resistors, precision.

3.3.2 Resistance range. The resistance range shall be from 1 kilohm to 22 megohms.

3.3.3 Resistance. The nominal resistance expressed in ohms is identified by a three digit number; the first two digits represent significant figures and the last digit specifies the number of zeros to follow. When resistance values less than 10 ohms are required, the letter “R” is substituted for one of the significant digits to represent the decimal point. The resistance may be of any value, but it is preferred that the standard values be chosen from table II.

3.3.4 Resistance tolerance. Resistors are available in tolerances (G) ±2 percent, (J) ±5 percent, and (K) ±10 percent.

TABLE II. Standard resistance values for the 10 to 100 decade.

Tolerance					
G (2%) & J (5%)	K (10%)	G (2%) & J (5%)	K (10%)	G (2%) & J (5%)	K (10%)
10	10	22	22	47	47
11		24		51	
12	12	27	27	56	56
13		30		62	
15	15	33	33	68	68
16		36		75	
18	18	39	39	82	82
20		43		91	

3.3.5 Temperature characteristics. The resistance temperature coefficient shall not exceed the values specified in table III.

TABLE III. Resistance temperature characteristics.

Characteristic	Resistance range
-500 ppm/°C	1 kilohm to 100 kilohms
-900 ppm/°C	100 kilohms to 1 megohm
-2000 ppm/°C	1 megohm to 10 megohms
-4000 ppm/°C	10 megohms to 22 megohms

3.3.6 Operating temperature. The operating temperature shall be -55°C to +165°C.

3.3.7 Power rating. The power rating shall be .75 watt at +70°C derated to +165°C at zero power (see figure 2).

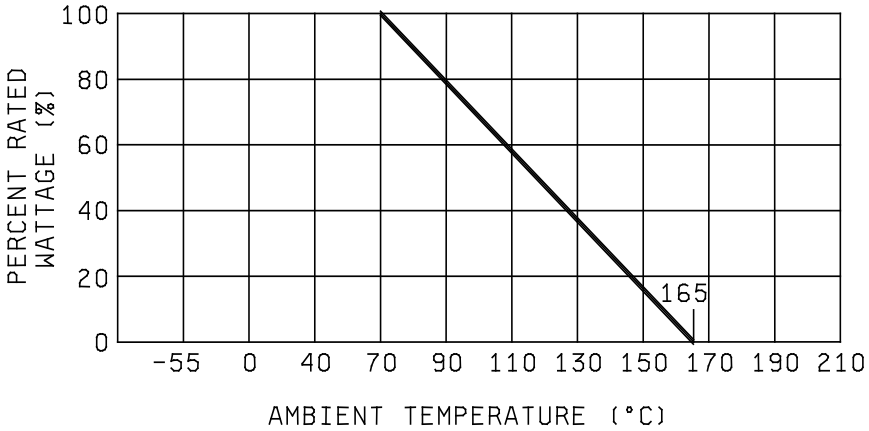

FIGURE 2. Derating curve.

3.3.8 Voltage rating. The maximum continuous working voltage shall not exceed 500 volts.

3.3.9 Maximum pulse. The maximum pulse voltage shall not exceed 6 kilovolts (see figure 3).

3.3.10 Dielectric strength voltage. The dielectric strength voltage shall not exceed 500 volts.

3.4 DC resistance. When resistors are tested as specified in 4.6, the dc resistance shall be within the specified tolerance of the nominal resistance (see 3.3.3) for all products deliverable on the contract.

3.5 Resistance temperature characteristic. When resistors are tested as specified in 4.7, the resistance temperature characteristic shall not exceed as specified in table III.

3.6 Voltage coefficient. When resistors are tested as specified in 4.8, the voltage coefficient measurements that will result in a total resistance change of 2 percent or less shall be considered acceptable.

3.7 Dielectric withstanding voltage. When resistors are tested as specified in 4.9, there shall be no evidence of flashover, mechanical damage, arching, or insulation breakdown. The change in resistance shall not exceed ±1 percent.

3.8 Insulation resistance. When resistors are tested as specified in 4.10, the insulation resistance shall be not less than 10,000 megohms.

3.9 Resistance to pulse. When resistors are tested as specified in 4.11, there shall be no evidence of mechanical damage; the change in resistance shall not exceed ±5 percent.

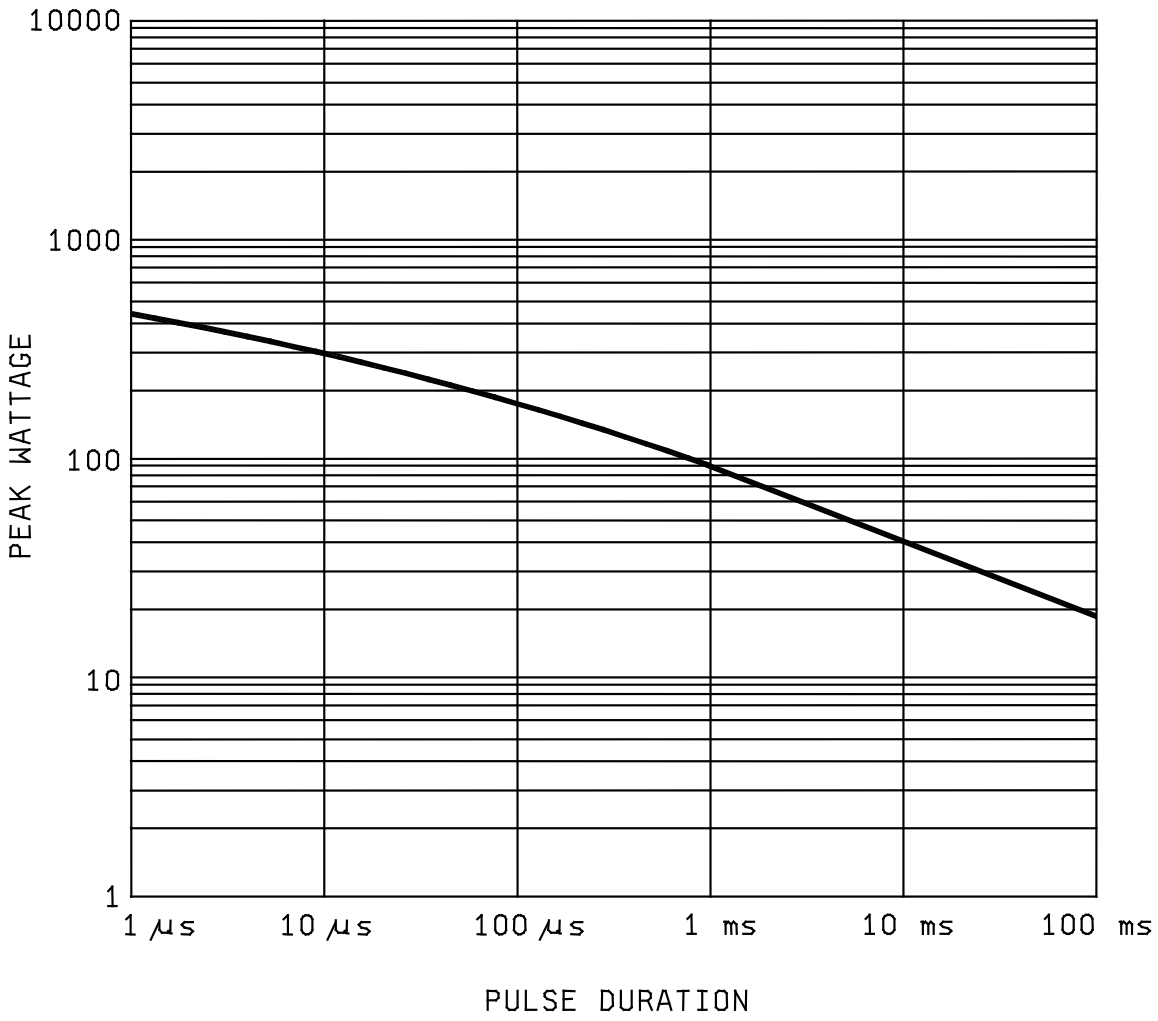

NOTE: Pulse capability is dependent on resistance values, waveform, repetition rate, circuit inductance, and temperature. The above figure is a general guide based on infrequent pulses with peak pulse voltage level not to exceed 6KV. Derate peak wattage by 50 percent for repetitive pulses. Average pulse power must exceed 0.75 watt. Derate continuous and pulse wattage and voltage ratings by 1.05 percent/°C above 70°C.

FIGURE 3. Pulse withstanding capability.

3.10 Low temperature operation. When resistors are tested as specified in 4.12, there shall be no evidence of mechanical damage. The change in resistance shall not exceed ±2 percent (±3 percent on values greater than 100K ohms).

3.11 Thermal shock. When resistors are tested as specified in 4.13, there shall be no evidence of mechanical damage; the change in resistance shall not exceed ±(2 percent +.05 ohm).

3.12 Low temperature storage. When resistors are tested as specified in 4.14, there shall be no evidence of mechanical damage. The change in resistance shall not exceed ±2 percent (±3 percent on values greater than 100K ohms).

3.13 Moisture resistance. When resistors are tested as specified in 4.15, there shall be no evidence of mechanical damage or products of corrosion except for normal discoloration, the change in resistance shall not exceed the following:

Change in resistance	Ohmic range (ohms)
±2 percent	≤56 k
±3 percent	56 k to ≤470 k
±5 percent	470 k to 10 M
±7 percent	> 10 M

3.14 Short time overload. When resistors are tested as specified in 4.16, there shall be no evidence of arching, burning, or charring; the change in resistance shall not exceed ±2 percent.

3.15 Terminal strength.

3.15.1 Direct load. When resistors are tested as specified in 4.17, resistors shall withstand the specified load without mechanical damage.

3.15.2 Twist. When resistors are tested as specified in 4.17.1, there shall be no evidence of breaking or loosening of terminals from the resistor form, or chipping of coating, or other evidence of mechanical damage. The change in resistance shall not exceed ±.5 percent.

3.16 Resistance to soldering heat. When resistors are tested as specified in 4.18, there shall be no evidence of mechanical damage. The change in resistance shall not exceed ±1 percent.

3.17 Life. When resistors are tested as specified in 4.19, there shall be no evidence of mechanical damage. The change in resistance between the initial measurement and any of the succeeding measurements, up to and including 1,000 hours, shall not exceed ±5 percent (±7 percent on values greater than 100K ohms).

3.18 Solderability. When resistors are tested as specified in 4.20, the dipped surface of the leads shall be at least 95 percent covered with a new solder coating. The remaining 5 percent of the lead surface may show only small pinholes or voids and shall not be concentrated in one area. Bare base metal and areas where the solder dip failed to cover the original coating are indications of poor solderability, and shall be cause for failure.

3.19 Fungus. All external materials including the color material, shall be nonnutrient to fungus growth, or shall be suitably treated fungus growth. The manufacturer shall verify by certification that all external materials, including the color coding material, are fungus resistant.

3.20 Marking. Resistors shall be free of missing, illegible, incorrect, mixed or smeared color markings, and shall be permanently color coded in accordance with MIL-STD-1285.

3.21 Recycled, recovered, or environmentally preferable materials. Recycled, recovered, or environmentally preferable materials should be used to the maximum extent possible provided that the material meets or exceeds the operational and maintenance requirements, and promotes economically advantageous life cycle costs.

* 3.22 Manufacturer eligibility. To be eligible for listing as an approved source of supply, a manufacturer shall perform the group A and group B inspections specified herein on a sample agreed upon by the manufacturer and DLA Land and Maritime-VAT.

* 3.22.1 Certificate of compliance. A certificate of compliance shall be required from manufacturers requesting to be listed as an approved source of supply.

3.23 Workmanship. Resistors shall be uniform in quality and free from defects that will affect life, serviceability, or appearance.

4. VERIFICATION

4.1 Qualification inspection. Qualification inspection is not applicable to this document.

4.2 Conformance inspection.

4.2.1 Inspection of product for delivery. Inspection of product for delivery shall consist of group A and group B inspections (see 6.2c).

4.3 Group A inspection. Group A inspection shall consist of the inspections specified in table IV, and shall be made on the same set of sample units, in the order shown.

TABLE IV. Group A inspection.

Inspection	Requirement paragraph	Test method paragraph	Number of samples
Subgroup I DC resistance	3.4	4.6	100 percent
Subgroup II Visual and mechanical inspection	3.2 and 3.20	4.5	13
Subgroup III Solderability	3.18	4.20	5

4.3.1 Subgroup I. Subgroup I tests shall be performed on 100 percent of the product supplied under this specification. Resistors that are out of resistance tolerance or which experience a change in resistance greater than that permitted for the tests of this subgroup shall be removed from the lot. Lots having more than 5 percent total rejects or one resistor, whichever is greater, due to exceeding the specified resistance change limit, shall not be furnished on the contract.

4.3.2 Subgroup II. A sample of 13 parts shall be randomly selected, if one or more defects are found, the lot shall be rescreened and defects removed. A new sample of 13 parts shall then be randomly selected. If one or more defects are found in this second sample, the lot shall be rejected and shall not be supplied against this document.

4.3.3 Subgroup III (solderability). A sample of 5 parts shall be randomly selected, as an option; the manufacturer may use electrical rejects from subgroup I test for all or part of the sample. If there are one or more defects, the lot is rejected. The manufacturer may use the following for corrective action:

a. Each lot that was used to form the failed lot shall be individually submitted to the solderability test. Lots that pass the solderability test are available for shipment.

b. The failed lot is submitted to a 100 percent hot solder dip. A subsequent solderability test shall then be performed. If the lot passes, it is available for shipment; if the lot fails, the manufacturer may perform the hot solder dip one additional time. If the lot fails, the lot is considered rejected and shall not be supplied to this drawing.

4.3.3.1 Disposition of samples. The solderability test is considered a destructive test. Samples submitted to the solderability test shall not be supplied on the contract.

4.4 Group B inspection. Group B inspection shall consist of the inspections specified in table V, in the order shown.

4.4.1 Certification. The acquiring activity, at its discretion, may accept a certificate of compliance with group B requirements in lieu of performing group B tests (see 6.2c).

4.4.2 Action in case of failure. If any of subgroups fail Group B testing and an appropriate lot screen can be established, the lot shall be screened and a new set of samples (see table V for number of samples), from the screened lot, shall be submitted to the subgroup(s) that failed. If one or more defects are found, in the resubmitted samples, the lot shall be rejected and shall not be supplied to this specification.

4.4.3 Disposition of sample units. Sample units that have been subjected to group B inspections shall not be supplied to this specification

TABLE V. Group B inspection.

Inspection	Requirement paragraph	Test method paragraph	Number of sample units for inspection	Number of failures allowed
Monthly				
Subgroup 1				
Life	3.17	4.19	5	0
Subgroup 2				
Voltage coefficient	3.6	4.8		
Dielectric withstanding voltage	3.7	4.9	5	0
Insulation resistance	3.8	4.10		
Resistance to pulse	3.9	4.11		
Quarterly				
Low temperature operation	3.10	4.12		
Thermal shock	3.11	4.13		
Low temperature storage	3.12	4.14	5	0
Moisture resistance	3.13	4.15		
Short time overload	3.14	4.16		
Semiannually				
Subgroup 1				
Resistance temperature characteristic	3.5	4.7	5	0
Subgroup 2				
Terminal strength	3.15	4.17	5	0
Resistance to soldering heat	3.16	4.18		
Subgroup 3				
Fungus	3.19	4.21	5	0

4.5 Visual and mechanical inspection. Resistors shall be examined to verify that the materials, design, construction, physical dimensions, marking, and workmanship are in accordance with the applicable requirements 3.2, 3.20, and 3.23.

4.6 DC resistance. (see 3.4). Resistors shall be tested in accordance with method 303 of MIL-STD-202. The following details and exception shall apply:

a. Measuring apparatus: The same measuring instrument shall be used for any one test, but not necessarily for all tests.

b. Test voltage: Table VI gives the recommended test voltage to be used. Other test voltages may be used; however, in the event of a difference in resistance readings attributable to the test voltage used, the specified test voltage listed in table VI shall be used.

TABLE VI. DC resistance test voltages.

Resistance, nominal	Test potential
Ohms	Volts
1,000 to 9,100 inclusive	9 ± 1.00
10,000 to 91,000 inclusive	27 ± 3.00
0.1 megohm or higher	90 ±10.00

4.7 Resistance temperature characteristic (see 3.5). Resistors shall be maintained at each of the ambient temperatures listed in table VII. Resistance measurements shall be made at each temperature; 15 minutes after resistors have attained that temperature. The temperature adjustment shall be acute within 1°C. The percent change in resistance, referred to a reference at 25°C, shall be computed by the following formula:

$$\text{Percent change in resistance} = \frac{(R - r)100}{r}$$

Where:
R = Resistance at test temperature
r = Resistance at reference temperature.

TABLE VII. Resistance temperature characteristic.

Sequence 1/	Temperature
1	25 ±3
2	-55 ±3
3	25 ±3
4	+75 ±3
5	+165 ±3

1/ At the option of the manufacturer, the reverse sequence of table VII may be as follows:

1. +25°C ±3°C
2. +165°C ±3°C
3. +75°C ±3°C
4. +25°C ±3°C
5. -55°C ±3°C

4.8 Voltage coefficient (see 3.6). Resistors shall be measured in accordance with method 309 of MIL-STD-202. The resistance shall be measured at one-tenth the rated continuous working voltage and at full rated continuous working voltage (RCWV) (see 3.3.8). Application of voltages shall be momentary to minimize heating effects. The resistance voltage coefficient shall be calculated with the following formula:

$$\text{Voltage Coefficient percent/volt} = \frac{(R - r)100}{r(0.9)(RCWV)}$$

Where:
R is the resistance at full RCWV
R is the resistance at one-tenth RCWV

4.9 Dielectric withstanding voltage (atmospheric) (see 3.7). Resistors shall be tested in accordance with method 301 of MIL-STD-202. The following details and exceptions shall apply:

The resistors shall be clamped in the trough of a 90°C metallic V-block of such size that the resistor body does not extend beyond the ends of the trough. The resistor leads shall be positioned such that they are no closer to the V-block than if they were parallel to the sides of the V-block. This prevents unnecessary proximity of the leads to the block, while permitting complete seating of the resistor body in the block.

Sine wave RMS voltages from an alternating current supply at commercial line frequency not more than 100 Hertz as specified in 3.3.8 shall be applied at the rate of approximately 100 volts per second between resistor terminals connected together and the V-block, and held for 5 seconds.

4.10 Insulation resistance (see 3.8). Resistors shall be tested in accordance with method 302 of MIL-STD-202. The following details and exception shall apply:

a. Test condition A.

b. Points of applications: Between the resistor terminals connected together.

4.11 Resistance to pulse (see 3.9). Resistors shall be tested as shown in figure 4. The required pulse voltage applied shall be as in 3.3.9 for 1 second "on" and 1 second "off" for 20,000 cycles, or figure 3, whichever is less.

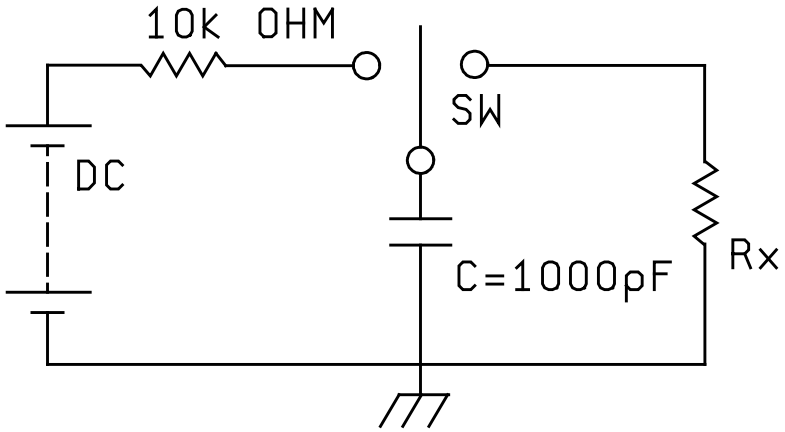

FIGURE 4. Resistance to pulse test circuit.

4.12 Low temperature operation (see 3.10).

4.12.1 Mounting. Resistors shall be mounted by their terminals so that there is at least 1 inch of free airspace around each resistor, and the mounting is in such a position with respect to the air that it offers substantially no obstruction to the flow of air across and around the resistors.

4.12.2 Procedure. Following a dc resistance measurement as specified 4.6, the mounted resistors shall be placed in a cold chamber at room temperature. The temperature shall be gradually decreased to -55°C +0°C, -5°C within 1.5 hours. At the option of the manufacturer, the resistors may be placed in the cold chamber when the chamber is already at the extreme low temperature. Resistors shall be maintained at this temperature for 24 hours ±4 hours. After the storage period at the decreased temperature, full rated continuous working voltage (see 3.5) shall be applied for 45 minutes. The resistors may be loaded individually or in parallel. Fifteen minutes +5 minutes, -0 minutes after the removal of the voltage, the temperature in the chamber shall be gradually increased to room temperature within not more than 8 hours (At the option of the manufacturer, removal without increasing temperature is permitted). The resistors shall be removed from the chamber and maintained at a temperature of 25°C ±5°C for approximately 24 hours. The dc resistance shall then be measured as specified in 4.6 and resistors shall be examined for evidence of mechanical damage.

4.13 Thermal shock (see 3.11). Resistors shall be tested in accordance with method 107 of MIL-STD-202. The following details and exceptions shall apply:

Resistors shall be mounted as specified in 4.12.1. Initial resistance shall be measured. The resistors shall be subjected to the temperature cycle specified in table VIII for a total of five cycles, performed continuously. Temperatures in steps 1 and 3 shall be maintained by forced air circulation. The hot and cold chambers shall be of such capacity that the air temperature will reach the temperature specified in table VIII within 2 minutes after the resistors have been placed in the appropriate chamber. Final resistance shall be measured approximately one hour after completion of the fifth cycle.

TABLE VIII. Thermal shock test sequence.

Step	Temperature °C	Time (min.)
1	-55 ±3	30
2	+25 ±5	10 +5, -0
3	+85 ±2	30
4	+25 ±5	10 +5, -0

4.14 Low temperature storage (see 3.12).

4.14.1 Mounting. Resistors shall be mounted by their terminals so that there is at least 1 inch of free airspace around each resistor, and the mounting is in such a position with respect to the air that it offers substantially no obstruction to the flow of air across and around the resistors.

4.14.2 Procedure. Following a dc resistance measurement as specified in 4.6, and within 1 hour after this measurement the resistors shall be placed in a cold chamber at a temperature of –55°C ±2°C for a period of 24 hours ±4 hours. The resistors shall then be removed from the chamber and maintained at a temperature of 25°C for a period of approximately from 2 hours to 8 hours; the dc resistance shall again be measured as specified 4.6. Resistors shall then be examined for evidence of mechanical damage.

4.15 Moisture resistance (see 3.13). Resistors shall be mounted as specified in 4.12.1. DC resistance shall be measured as specified in 4.6. Resistors shall be exposed to a temperature of 40°C ±2°C and a relative humidity of 90-95 percent for 1,000 hours. After removal from the chamber, the resistors shall be allowed to dry at room ambient temperature for approximately one hour. Final resistance shall be measured as specified in 4.6.

4.16 Short time overload (see 3.14). Resistors shall be allowed to stabilize at room temperature. DC resistance shall be measured as specified in 4.6. Following this measurement, a potential of 2.5 times the rated continuous working voltage (see 3.3.8) shall be applied for 5 seconds ±.5 second to the resistor terminals. In no case shall the voltage exceed the applicable value listed in 3.3.8. Thirty minutes after removal of the test potential, the dc resistance shall again be measured as specified in 4.6.

4.17 Terminal strength (see 3.15). Resistors shall be tested in accordance with method 211 (test condition A) of MIL-STD-202 with the following detail and exceptions:

DC resistance shall be measured as specified in 4.6. The resistors shall be clamped by one terminal lead. The applied load shall be 10N (2.25 pounds). DC resistance shall be measured as specified in 4.6.

4.17.1 Twist test (see 3.15.1). Resistors shall be tested in accordance with method 211 (test condition D) of MIL-STD-202 with the following detail and exceptions:

This test is to be performed following the test of 4.17. DC resistance shall be measured as specified in 4.6. The applied load shall be 5N (1.12 pounds). DC resistance shall be measured as specified in 4.6.

4.18 Resistance to soldering heat (see 3.16). Resistors shall be tested in accordance with method 210 of MIL-STD-202. The following details and exceptions shall apply:

DC resistance shall be measured as specified in 4.6. Resistors shall then be immersed, one at a time for 3.5 second ±0.5 second each, in molten solder at +350°C ±10°C to a distance of 0.079-0.098 inch (2-2.5 mm) from the resistor body. DC resistance shall be measured as specified in 4.6, 2 hours ± 1 hour after the immersions.

4.19 Life (see 3.17). Resistors shall be tested in accordance with method 108 of MIL-STD-202. The following details and exceptions shall apply:

DC resistance shall be measured as specified in 4.6. Resistors shall be placed at an ambient temperature of 25°C ±3°C. Then DC rated continuous working voltage (see 3.3.8) shall be applied intermittently 1-1.5 hours “on”, .5 hour “off” for a total of 1,000 hours. After return to room temperature, final resistance shall be measured as specified in 4.6.

4.20 Solderability (see 3.18). Resistors shall be tested in accordance with method 208 (category I) of MIL-STD-202. Both leads shall be tested. The following details and exceptions shall apply:

The lead wire is immersed 0.079-0.098 inch (2-2.25 mm) from the resistor body.

4.21 Fungus (see 3.19). Resistors shall be tested in accordance with method 508 of MIL-STD-810. Resistors shall then be examined for evidence of fungus.

5. PACKAGING

5.1 Packaging. For acquisition purposes, the packaging requirements shall be as specified in the contract or order (see 6.2). When actual packaging of materiel is to be performed by DoD personnel or in-house contractor personnel, these personnel need to contact the responsible packaging activity to ascertain packaging requirements. Packaging requirements are maintained by the Inventory Control Point's packaging activity within the Military Department or Defense Agency, or within the military service's system commands. Packaging data retrieval is available from the managing Military Department's or Defense Agency's automated packaging files, CD-ROM products, or by contacting the responsible packaging activity.

6. NOTES

(This section contains information of a general or explanatory nature that may be helpful, but is not mandatory.)

6.1 Intended use. The carbon film resistors described herein are intended to be used where high voltage pulse withstanding capabilities, low inductance characteristics are required.

6.2 Ordering data. The contract or purchase order should specify the following:

a. Complete PIN (see 1.2).

b. Requirements for delivery: One copy of the conformance inspection data or certification of compliance that parts have passed conformance inspection with each shipment of parts by the manufacturer.

* c. Whether the manufacturer performs the group B tests or provides certification of compliance with group B requirements. If purchase order makes no reference to Group B screening the manufacturer will provide a certification of compliance (see 4.4.1).

d. Requirements for packaging and packing.

e. Terminal finish if other than standard finish (Hot solder dipped available).

6.3 Peak pulse voltage. Peak pulse voltage is highly dependent on pulse waveform and resistance value. All levels are not attainable for all values and pulse waveforms. Consult suppliers for application assistance.

6.4 Tin whisker growth. The use of alloys with tin content greater than 97 percent, by mass, may exhibit tin whisker growth problems after manufacture. Tin whiskers may occur anytime from a day to years after manufacture and can develop under typical operating conditions, on products that use such materials. Conformal coatings applied over top of a whisker-prone surface will not prevent the formation of tin whiskers. Alloys of 3 percent lead, by mass, have shown to inhibit the growth of tin whiskers. For additional information on this matter, refer to ASTM-B545 (Standard Specification for Electrodeposited Coatings of Tin).

* 6.5 User of record. Coordination of this document for future revisions is coordinated only with the approved source of supply and the users of record of this document. Requests to be added as a recorded user of this drawing may be achieved online at resistor@dla.mil or in writing to: DLA Land and Maritime, Attn: VAT, Post Office Box 3990, Columbus, OH 43218-3990 or by telephone (614) 692-0552 or DSN 850-0552.

* 6.6 Approved source of supply. Approved source of supply is listed herein. Additional sources will be added as they become available. Assistance in the use of this drawing may be obtained online at resistor@dla.mil or contact DLA Land and Maritime, Attn: VAT, Post Office Box 3990, Columbus, OH 43218-3990 or by telephone (614) 692-0552 or DSN 850-0552.

DLA Land and Maritime drawing PIN	Vendors similar designation or type number 1/	Vendor CAGE	Vendor name and address
03007-****	CFZ75ERD termination Q	56637	RCD Components Inc. 520 E. Industrial Park Dr. Manchester, NH 03109

1/ Parts must be purchased to the DLA Land and Maritime PIN to assure that all performance requirements and tests are met.