[INCH-POUND]
AN116 Rev 3
9 December 2013
SUPERSEDING
AN116 Rev 2
20 November 1956

DETAIL SPECIFICATION SHEET

SHACKLE, ANCHOR, FORGER CARBON STEEL SCREW PIN

Inactive for new design
after 16 June 1997,
For new design, use RR-C-271.

This specification is approved for use by all Departments and Agencies of the Department of Defense.

The requirements for acquiring the product described herein shall consist of this specification sheet and RR-C-271.

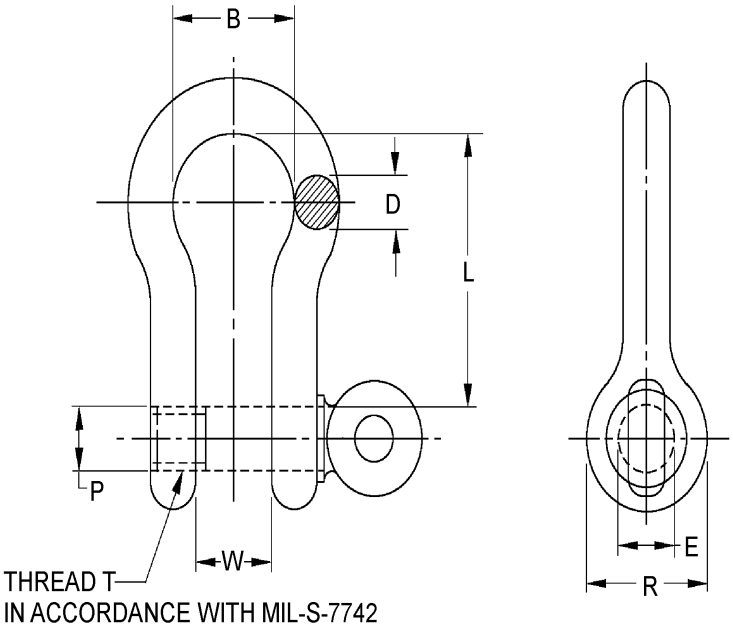

FIGURE 1 Shackle, anchor, forger carbon steel screw pin.

Beneficial comments, recommendations, additions, deletions, clarifications, etc., and any data that may improve this document should be sent to: DLA Land and Maritime, ATTN: VAI, P.O. Box 3990, Columbus OH 43218–3990, or email fluidflow@.dla.mil. Since contact information can change you may want to verify the currency of the address information using the ASSIST Online database at https://assist.dla.mil/.

Table I. Dimensions for shackle, anchor, forger carbon steel screw pin. 1/2/3/4/5/6/7/8/9/

AN Part or Identifying Number (PIN)	Breaking strength min. lb. (Ref)(kg)	B Bow width (mm)		D Min dia. (mm)	E Inside dia. unthreaded eye (mm)	
AN116-3	2,600 (970)	.625 (15.875)	± .062 (1.6)	.188 (4.78)	.281 (7.14)	± .016(.41)
AN116-4	3,550 (1,325)	.750 (19.05)		.250 (6.35)	.375(9.53)	± .031(.79)
AN116-5	5,300 (1978)	.875 (22.23)		.312 (7.92)	.438(11.13)	
AN116-6	7,950 (2967)	1.031 (26.19)		.375 (9.53)	.500 (12.7)	
AN116-7	10,850 (4,050)	1.188 (30.18)		.438 (11.13)	.562 (14.27)	
AN116-8	14,150 (5281)	1.312 (33.32)		.500 (12.7)	.688 (17.48)	
AN116-9	17,900 (6681)	1.500 (38.1)	± .125 (3.18)	.562 (14.27)		
AN116-10	22,100 (8249)	1.688 (42.88)		.625 (15.88)	.812 (20.62)	
AN116-12	31,800 (11,869)	1.938 (49.23)		.750 (19.05)	.938 (23.83)	
AN116-14	43,250 (16,143)	2.250 (57.15)	± .188 (4.78)	.875 (22.23)	1.062 (26.97)	
AN116-16	56,550 (21,107)	2.625 (66.68)		1.000 (25.4)	1.188 (30.18)	
AN116-18	66,800 (24,933)	2.875 (73.03)		1.125 (28.58)	1.312 (33.32)	
AN116-20	82,500 (30,792)	3.188 (80.98)	± .250 (6.35)	1.250 (31.75)	1.438 (36.53)	
AN116-22	99,800 (37,250)	3.562 (90.47)		1.375 (34.93)	1.562 (39.67)	+ .062/- .031 (1.6)/(.79)
AN116-24	118,700 (44,304)	3.812 (96.82)		1.500 (38.1)	1.688 (42.88)	
AN116-26	139,500 (52,067)	4.438 (112.73)		1.625 (41.28)	1.812 (46.03)	
AN116-28	161,600 (60,316)	4.875 (123.83)		1.750 (44.45)	2.094 (53.19)	± .062 (1.6)
AN116-32	211,100 (78,791)	5.562 (141.27)		2.000 (50.8)	2.344 (59.54)	

See notes at end of table.

Table I. Dimensions for shackle, anchor, forger carbon steel screw PIN –continued. 1/2/3/4/5/6/7/8/9/

AN Part or Identifying Number (PIN)	L Inside length (mm)		P Pin dia. (mm)	
AN116-3	.875(22.22)		.250(6.35)	+ .016(.41) - .000(0)
AN116-4	1.125(28.58)		.312(7.92)	
AN116-5	1.250(31.75)	± .062(1.6)	.375(9.53)	
AN116-6	1.438(36.53)		.438(11.13)	
AN116-7	1.688(42.88)		.500(12.7)	
AN116-8	1.938(49.23)		.625 (15.88)	
AN116-9	2.125(53.98)	± .0125(.318)		
AN116-10	2.500(63.5)		.750(19.05)	
AN116-12	3.000(76.2)		.875(22.23)	
AN116-14	3.250(82.55)		1.000(25.4)	+ .031(.79) - .000(0)
AN116-16	3.750(95.25)		1.125(28.58)	
AN116-18	4.250(107.95)		1.250(31.75)	
AN116-20	4.500(114.3)	± .250(.635)	1.375(34.93)	
AN116-22	5.250(133.35)		1.500(38.1)	
AN116-24	5.750(146.05)		1.625(41.28)	
AN116-26	6.250(158.75)		1.750(44.45)	
AN116-28	7.000(177.8)		2.000(50.8)	
AN116-32	7.750(196.85)		2.250(57.15)	

See notes at end of table.

Table I. Dimensions for shackle, anchor, forger carbon steel screw PIN. –continued. 1/2/3/4/5/6/7/8/9/

AN Part or Identifying Number (PIN)	R Outside dia. eye (mm)		Thread T MIL-S-7742		W Width between eyes, (mm)		WT, LB Approx. (gm.)
AN116-3	.594(15.09)	± .062 (1.6)	1/4-20	UNC-2A UNC-2B	.375(9.5)	± .031 (.079)	.08(30)
AN116-4	.719(18.26)		5/16-18		.469(12)		.12(45)
AN116-5	.875(22.23)		3/8-16		.531(13.5)		.21(78)
AN116-6	1.000(25.4)		7/16-14		.656(16.7)		.32(119)
AN116-7	1.125(28.58)		1/2-13		.719(18.3)		.49(183)
AN116-8	1.312(33.32)		5/8-11		.812(20.6)	± .062 (1.6)	.73(272)
AN116-9	1.438(36.53)				.875(22.2)		.92(343)
AN116-10	1.625(41.28)		3/4-10		1.062(27)		1.51(564)
AN116-12	1.875(47.63)		7/8-9		1.250(32.)		2.26(844)
AN116-14	2.062(52.37)		1-8		1.438(37)		3.40(1269)
AN116-16	2.438(61.93)		1-1/8-7		1.688(43)		4.95(1848)
AN116-18	2.688(68.28)		1-1/4-7		1.812(46)		6.91(2579)
AN116-20	3.000(76.2)		1-3/8-6		2.000(51)		8.99(3355)
AN116-22	3.312(84.12)		1-1/2-6		2.250(57)	± .125 (3.2)	12.19(4550)
AN116-24	3.562(90.47)		1-5/8 - 5-1/2	NS-2A NS-2B	2.375(60)		15.95(5953)
AN116-26	3.812(96.82)		1-3/4 - 5	UNC-2A UNC-2B	2.625(67)		19.10(7129)
AN116-28	4.062(103.17)		2-41/2		2.875(73)		27.50(10264)
AN116-32	4.625(117.48)	± .125 (3.2)	2-1/4 - 4-1/2		3.250(83)		39.00(14556)

See notes at end of table.

NOTES:
1. Dimensions are in inches.
2. Metric equivalents are given for information only.
3. Break sharp edges .and remove all hanging burrs and slivers.
4. Unless otherwise noted tolerances shall be ±.005 inches (0.13 mm) and angles ±.5°.
5. Machined surfaces shall be smooth to 125µin Ra, hex surfaces may be 250µin Ra, unless otherwise specified on the figures. Surface finish shall be in accordance with ASME B46.1.
6. Type: RR-C-271, type IVA, class 2, with the exception of the requirements of this specification.
7. Maximum working load equal to 1/5 minimum breaking strength as specified in table I.
8. Material: Forged carbon steel, see procurement specification RR-C-271.
9. Finish: Zinc coating, see procurement specification, except if the hot-dip (galvanizing) process is used, the coating shall be applied in accordance with specification ASTM A153/A153M.

Shackle, anchor, forger carbon steel screw pin: See figure 1.

PIN: The PIN consists of the prefix letter “AN” the specification sheet number, and a dash number for tube size, and shackle size, AN116-4.

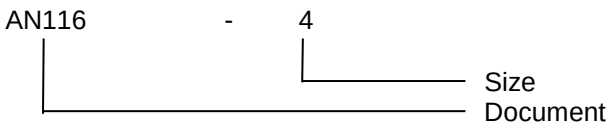

Order of precedence. Unless otherwise noted herein or in the contract, in the event of a conflict between the text of this document and the references cited herein, the text of this document takes precedence. Nothing in this document, however supersedes applicable laws and regulations unless a specific exemption has been obtained.

Referenced documents shall be of this issues in effect on date of invitations for bid.

Changes from previous issue. Marginal notations are not used in this revision to identify changes with respect to the previous issue due to the extensiveness of the changes.

Referenced documents. In addition to RR-C-271, this document references the following:

ASME B46.1.
ASTM A153/A153M
MIL-S-7742

CONCLUDING MATERIAL

MILITARY INTERESTS

Custodians:
Army - AV
Navy - MC
Air Force - 99
DLA - CC

Review activities:
Army-MI
Navy – SA,YD
Air Force – 71
DLA – GS

CIVIL AGENCY COORDINATING ACTIVITY:

GSA - FSS

Preparing activity:
DLA - CC

Project 4030-2014-005

NOTE: The activities listed above were interested in this document as of the date of this document. Since organizations and responsibilities can change, you should verify the currency of the information above using the ASSIST Online database at https://assist.dla.mil/.