INCH-POUND

MS9197D
w/AMENDMENT 2
30 June 2011
SUPERSEDING
MS9197D
w/AMENDMENT 1
17 May 2011

DETAIL SPECIFICATION SHEET

NUT, TUBE COUPLING-CRES SAE-AMS5646, SILVER PLATE

This specification is approved for use by all Departments and Agencies of the Department of Defense .

The requirements for acquiring the product described herein shall consist of this specification sheet.

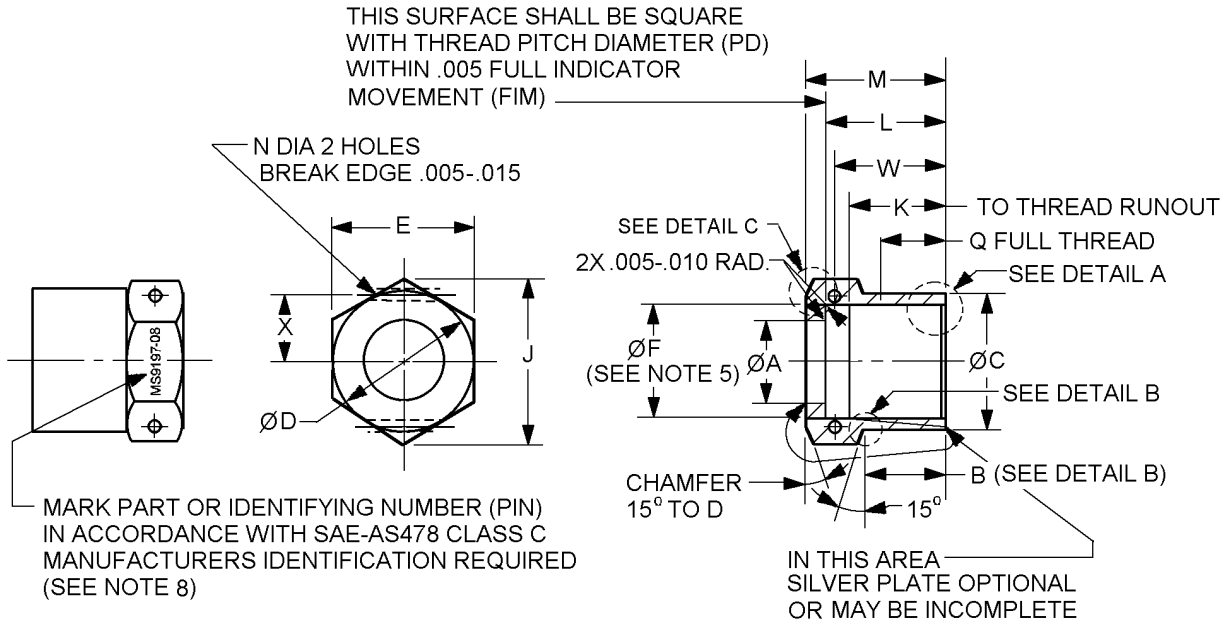

Inches	mm
.005	0.13
.010	0.25
.015	0.38

FIGURE 1. Nut, tube coupling.

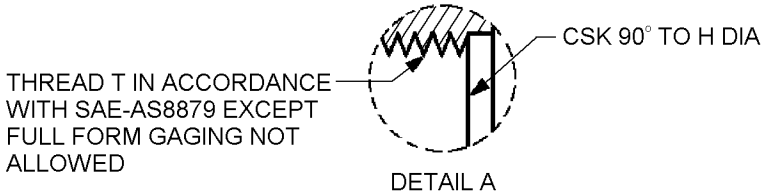

DETAIL A

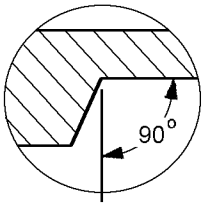

DETAIL B
THEORETICAL SHARP CORNER

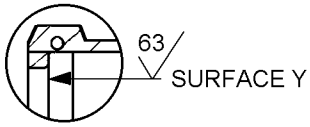

DETAIL C

Dash number	Tube OD inches (mm)	Thread T SAE-AS8879	A diameter inches (mm) +.003 (0.08) -.000	B inches (mm) ±.015 (0.38)	C diameter inches (mm) ±.005 (0.13)
-02	.125 (3.18)	.3125 - 24UNJF -3B	.180 (4.57)	.435 (11.05)	.425 (10.80)
-03	.188 (4.78)	.3750 - 24UNJF -3B	.242 (6.15)	.452 (11.48)	.490 (12.45)
-04	.250 (6.35)	.4375 - 20UNJF -3B	.305 (7.75)	.467 (11.86)	.550 (13.97)
-05	.313 (7.95)	.5000 - 20UNJF -3B	.374 (9.50)	.440 (11.18)	.615 (15.62)
-06	.375 (9.53)	.5625 - 18UNJF - 3B	.440 (11.18)	.467 (11.86)	.678 (17.22)
-07	.438 (11.13)	.6250 - 18UNJF -3B	.502 (12.75)	.493 (12.52)	.740 (18.80)
-08	.500 (12.70)	.7500 - 16UNJF - 3B	.570 (14.48)	.493 (12.52)	.865 (21.97)
-09	.562 (14.27)	.8125 - 16UNJ - 3B	.634 (16.10)	.493 (12.52)	.927 (23.55)
-10	.625 (15.88)	.8750 - 14UNJF - 3B	.698 (17.73)	.617 (15.67)	.990 (25.15)
-11	.688 (17.48)	1.000 - 12UNJF - 3B	.770 (19.56)	.588 (14.94)	1.115 (28.32)
-12	.750 (19.05)	1.0625 - 12UNJ - 3B	.834 (21.18)	.588 (14.94)	1.180 (29.97)
-14	.875 (22.23)	1.1875 - 12UNJ - 3B	.961 (24.41)	.615 (15.62)	1.320 (33.53)
-16	1.000 (25.40)	1.3125 - 12UNJ - 3B	1.089 (27.66)	.652 (16.56)	1.433 (36.40)
-18	1.125 (28.58)	1.500 - 12UNJF - 3B	1.217 (30.91)	.680 (17.27)	1.620 (41.15)
-20	1.250 (31.75)	1.6250 - 12UNJ - 3B	1.347 (34.21)	.727 (18.47)	1.745 (44.32)
-24	1.500 (38.10)	1.8750 - 12UNJ - 3B	1.617 (41.07)	.880 (22.35)	1.995 (50.67)
-28	1.750 (44.45)	2.2500 - 12UNJ - 3B	1.890 (48.01)	.930 (23.62)	2.410 (61.21)
-32	2.000 (50.80)	2.500 - 12UNJ - 3B	2.167 (55.04)	1.060 (26.92)	2.660 (67.56)
-40	2.500 (63.50)	3.000 - 12UNJ - 3B	2.667 (67.74)	.860 (21.84)	3.200 (81.28)
-48	3.000 (76.20)	3.500 - 12UNJ - 3B	3.180 (80.77)	.910 (23.11)	3.700 (93.98)

FIGURE 1. Nut, tube coupling - Continued.

Dash number	D diameter inches (mm)	E inches (mm)	F diameter inches (mm)	H inches (mm) +.030 (0.76) -.000
-02	.438 (11.13)	.430 - .439 (10.92) - (11.15)	.272 - .280 (6.91) - (7.11)	.312 (7.92)
-03	.500 (12.70)	.492 - .502 (12.50) - (12.75)	.334 - .342 (8.48) - (8.69)	.375 (9.53)
-04	.562 (14.27)	.553 - .564 (14.05) - (14.33)	.388 - .397 (9.86) - (10.08)	.438 (11.13)
-05	.625 (15.88)	.616 - .627 (15.65) - (15.93)	.451 - .459 (11.46) - (11.66)	.500 (12.70)
-06	.688 (17.48)	.679 - .690 (17.25) - (17.53)	.508 - .517 (12.90) - (13.13)	.562 (14.27)
-07	.750 (19.05)	.741 - .752 (18.82) - (19.10)	.570 - .579 (14.48) - (14.71)	.625 (15.88)
-08	.875 (22.23)	.865 - .877 (21.97) - (22.28)	.689 - .698 (17.50) - (17.73)	.750 (19.05)
-09	.937 (23.80)	.928 - .940 (23.57) - (23.88)	.751 - .760 (19.08) - (19.30)	.812 (20.62)
-10	1.000 (25.40)	.990 - 1.002 (25.15) - (25.45)	.805 - .815 (20.45) - (20.70)	.875 (22.23)
-11	1.125 (28.58)	1.114 - 1.127 (28.30) - (28.63)	.918 - .930 (23.32) - (23.62)	1.000 (25.40)
-12	1.250 (31.75)	1.239 - 1.252 (31.47) - (31.80)	.981 - .991 (24.92) - (25.17)	1.062 (26.97)
-14	1.375 (34.93)	1.364 - 1.377 (34.65) - (34.98)	1.106 - 1.116 (28.09) - (28.35)	1.188 (30.18)
-16	1.500 (38.10)	1.489 - 1.502 (37.82) - (38.15)	1.231 - 1.241 (31.27) - (31.52)	1.312 (33.32)
-18	1.750 (44.45)	1.738 - 1.752 (44.15) - (44.50)	1.419 - 1.429 (36.04) - (36.30)	1.500 (38.10)
-20	1.812 (46.02)	1.800 - 1.814 (45.72) - (46.08)	1.544 - 1.554 (39.22) - (39.47)	1.625 (41.28)
-24	2.125 (53.98)	2.113 - 2.127 (53.67) - (54.03)	1.794 - 1.804 (45.57) - (45.82)	1.875 (47.63)
-28	2.500 (63.50)	2.487 - 2.502 (63.17) - (63.55)	2.169 - 2.179 (55.09) - (55.35)	2.250 (57.15)
-32	2.750 (69.85)	2.737 - 2.752 (69.52) - (69.90)	2.419 - 2.429 (61.44) - (61.70)	2.500 (63.50)
-40	3.250 (82.55)	3.237 - 3.252 (82.22) - (82.60)	2.919 - 2.929 (74.14) - (74.40)	3.000 (76.20)
-48	3.812 (96.82)	3.798 - 3.814 (96.47) - (96.88)	3.419 - 3.429 (86.84) - (87.10)	3.500 (88.90)

FIGURE 1. Nut, tube coupling - Continued.

Dash number	J min	K max inches (mm)	L inches (mm) ±.005 (0.13)	M inches (mm)	N inches (mm)
-02	.491 (12.47)	.425 (10.80)	.575 (14.61)	.650 (16.51)	.045 (1.14) - .050 (1.27)
-03	.561 (14.25)	.441 (11.20)	.592 (15.04)	.667 (16.94)	.057 (1.45) - .062 (1.57)
-04	.631 (16.03)	.482 (12.24)	.607 (15.42)	.682 (17.32)	
-05	.703 (17.86)	.482 (12.24)	.610 (15.49)	.690 (17.53)	.065 (1.65) - .075 (1.91)
-06	.775 (19.69)	.535 (13.59)	.637 (16.18)	.742 (18.85)	
-07	.846 (21.49)	.536 (13.61)	.663 (16.84)	.768 (19.51)	
-08	.987 (25.07)	.569 (14.45)	.723 (18.36)	.828 (21.03)	
-09	1.059 (26.90)	.569 (14.45)	.723 (18.36)	.828 (21.03)	
-10	1.130 (28.70)	.667 (16.94)	.817 (20.75)	.927 (23.55)	
-11	1.271 (32.28)	.738 (18.75)	.868 (22.05)	.968 (24.59)	
-12	1.414 (35.92)	.738 (18.75)	.868 (22.05)	.968 (24.59)	
-14	1.556 (39.52)	.765 (19.43)	.915 (23.24)	1.015 (25.78)	
-16	1.699 (43.15)	.786 (19.96)	.962 (24.43)	1.062 (26.97)	
-18	1.985 (50.42)	.800 (20.32)	.990 (25.15)	1.120 (28.45)	
-20	2.054 (52.17)	.810 (20.57)	1.017 (25.83)	1.167 (29.64)	
-24	2.411 (61.24)	.937 (23.80)	1.170 (29.72)	1.320 (33.53)	
-28	2.838 (72.09)	.945 (24.00)	1.170 (29.72)	1.370 (34.80)	
-32	3.123 (79.32)	1.050 (26.67)	1.300 (33.02)	1.500 (38.10)	
-40	3.693 (93.80)	.850 (21.59)	1.100 (27.94)	1.300 (33.02)	
-48	4.334 (110.08)	.900 (22.86)	1.150 (29.21)	1.350 (34.29)	

FIGURE 1. Nut, tube coupling - Continued.

Dash number	Q min inches (mm)	W inches (mm)	X inches (mm) ±.005 (0.13)
-02	.300 (7.62)	.535 (13.59)	.180 (4.57) - .190 (4.83)
-03	.316 (8.03)	.552 (14.02)	.210 (5.33) - .220 (5.59)
-04	.332 (8.43)	.567 (14.40)	.245 (6.22) - .255 (6.48)
-05	.332 (8.43)	.565 (14.35)	.280 (7.11) - .290 (7.37)
-06	.367 (9.32)	.592 (15.04)	.310 (7.87) - .320 (8.13)
-07	.368 (9.35)	.618 (15.70)	.336 (8.53) - .356 (9.04)
-08	.383 (9.73)	.648 (16.46)	.400 (10.16) - .420 (10.67)
-09	.383 (9.73)	.668 (16.97)	.427 (10.85) - .447 (11.35)
-10	.453 (11.51)	.777 (19.74)	.465 (11.81) - .485 (12.32)
-11	.488 (12.40)	.818 (20.78)	.520 (13.21) - .540 (13.72)
-12	.488 (12.40)	.818 (20.78)	.580 (14.73) - .600 (15.24)
-14	.515 (13.08)	.865 (21.97)	.645 (16.38) - .665 (16.89)
-16	.536 (13.61)	.912 (23.16)	.715 (18.16) - .735 (18.67)
-18	.550 (13.97)	.945 (24.00)	.840 (21.34) - .860 (21.84)
-20	.560 (14.22)	.967 (24.56)	.890 (22.61) - .910 (23.11)
-24	.687 (17.45)	1.100 (27.94)	1.040 (26.42) - 1.060 (26.92)
-28	.695 (17.65)	1.170 (29.72)	1.255 (31.88) - 1.275 (32.39)
-32	.800 (20.32)	1.300 (33.02)	1.395 (35.43) - 1.415 (35.94)
-40	.600 (15.24)	1.100 (27.94)	1.680 (42.67) - 1.700 (43.18)
-48	.650 (16.51)	1.150 (29.21)	2.000 (50.80) - 2.020 (51.31)

FIGURE 1. Nut, tube coupling - Continued.

NOTES:

1. Dimensions are in inches.
2. Metric equivalents are given for information only.
3. Tolerances linear dimensions ±.010 inch (0.25 mm) angular dimensions ±5°.
4. Surface texture unless otherwise specified shall be 125µ inches (3.17µm) except hex, reference ASME B46.1.
5. Diameters A and F shall be concentric to thread PD within .004 inch (0.01 mm) FIM. Diameter C and hexagon E shall be concentric to thread PD within .010 inch (0.25 mm) FIM.
6. Dimensions specified are after plating.
7. Break Sharp edges .003 - .015 inch (0.08 - 0.38 mm) unless otherwise specified. Fillets .005 - .020 inch (0.13 - 0.51 m) RAD or chamfer
8. Multiple marking permissible provided positive identification is shown. Parts shall be marked before threading.
9. For design features purposes, this standard takes precedence over documents referenced herein.

FIGURE 1. Nut, tube coupling - Continued.

REQUIREMENTS:

Dimensions and configurations: See figure 1.

Material: Steel, corrosion and heat-resistant in accordance with SAE-AMS5646.

Surface finish: Silver plate in accordance with SAE-AMS2410, 300µ to 600µ inches (7.62 µm to 15.24µm) thick on thread at PD and surface Y.

Parts shall be fluorescent penetrate inspected in accordance with ASTM E1417.

PIN:

MS9197 - 08

08 — Nut tube coupling size (see figure 1)

MS9197 — Specification sheet number

PIN Example:

MS9197-08 identifies a nut tube coupling .500 inch (12.70 mm) tube.

Do not use unassigned PIN's.

The approximate weight for each fitting is shown in table I.

TABLE I. Approximate weight.

Dash number	Approximate weight lb/100 (kg/100)		Dash number	Approximate weight lb/100 (kg/100)
-02	1.210 (0.55)		-11	7.859 (3.56)
-03	1.475 (0.67)		-12	9.907 (4.49)
-04	1.830 (0.83)		-14	12.164 (5.52)
-05	2.600 (1.18)		-16	13.637 (6.19)
-06	2.920 (1.32)		-18	19.830 (8.99)
-07	3.422 (1.55)		-20	20.016 (9.08)
-08	4.680 (2.12)		-24	27.903 (12.66)
-09	5.314 (2.41)		-28	41.710 (18.92)
-10	6.310 (2.86)		-32	49.000 (22.23)
			-40	60.621 (27.50)
			-48	78.529 (35.62)

Amendment notations. The margins of this specification are marked with vertical lines to indicate modifications generated by this amendment. This was done as a convenience only and the Government assumes no liability whatsoever for any inaccuracies in these notations. Bidders and contractors are cautioned to evaluate the requirements of this document based on the entire content irrespective of the marginal notations.

Referenced documents. This document references the following:

ASME B46.1
ASTM E1417
SAE-AS478
SAE-AS8879
SAE-AMS2410
SAE-AMS5646

CONCLUDING MATERIAL

Custodians:
Navy - AS
Air Force - 99
DLA - CC

Review activities:
Navy - MC
Air Force - 71

Preparing activity:
DLA - CC

(Project 4730-2011-093)

NOTE: The activities listed above were interested in this document as of the date of this document. Since organizations and responsibilities can change, you should verify the currency of the information above using the ASSIST Online database at https://assist.daps.dla.mil.