INCH-POUND

MS9095B
16 February 2010
SUPERSEDING
MS9095A
11 March 1970

DETAIL SPECIFICATION SHEET

NIPPLE, TUBE - ALUMINUM, BOSS

This specification is approved for use by all Departments and Agencies of the Department of Defense .

The requirements for acquiring the product described herein shall consist of this specification sheet and SAE-AS4841.

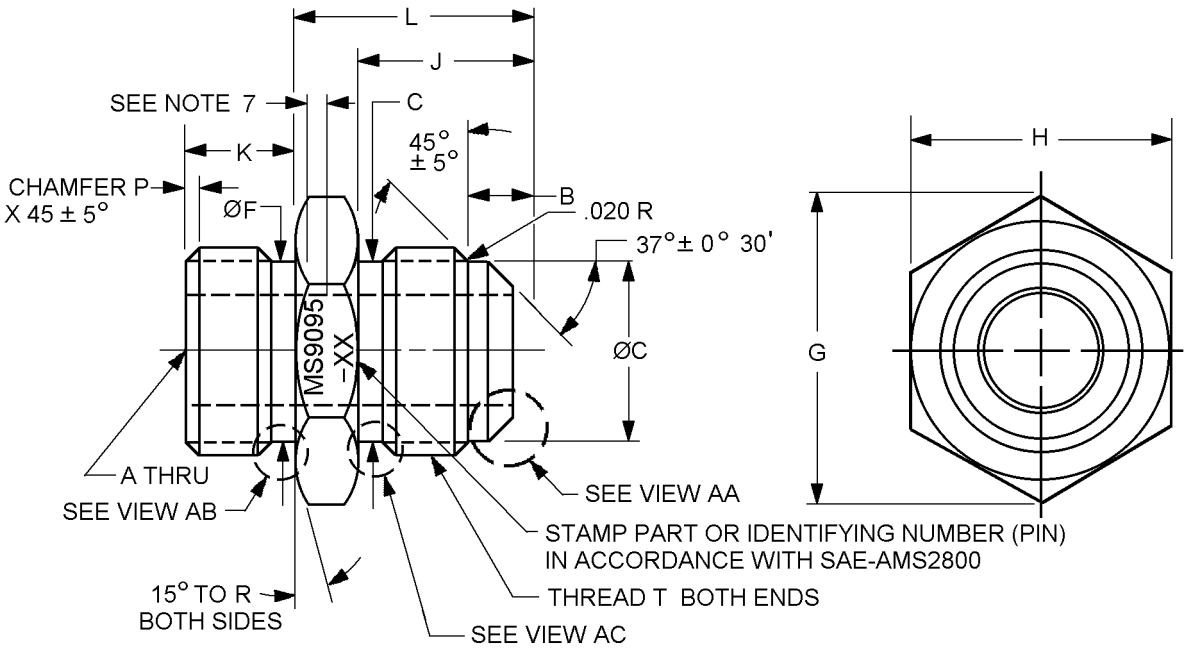

Inches	mm
.020	0.51

FIGURE 1. Nipple, tube, boss.

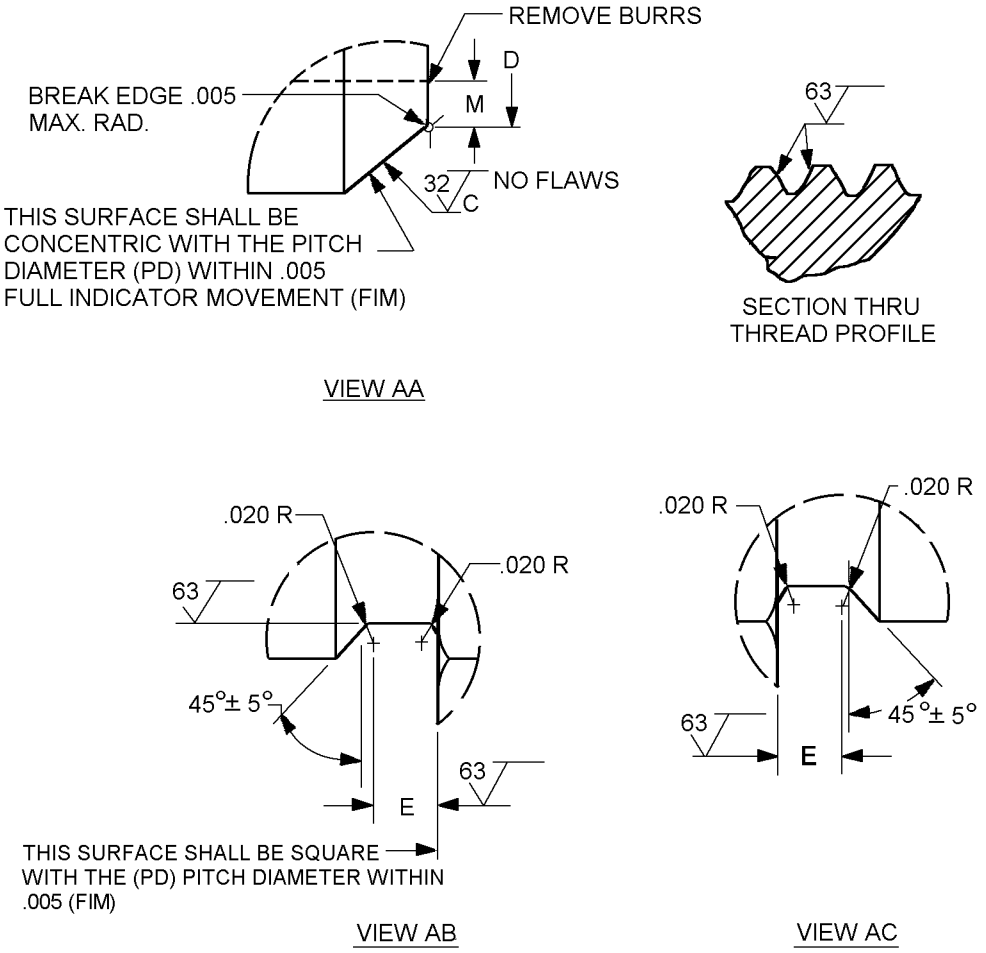

Inches	mm
.005	0.13
.020	0.51

FIGURE 1. Nipple, tube, boss - Continued.

Dash number	Tube OD inches (mm)	Thread T (see note 10)	A diameter inches (mm)			B inches (mm) +.015 (0.38) -.000
-08	.500 (12.70)	.7500 - 16UNF - 3A	.387 (9.83)	-	.395 (10.03)	.229 (5.82)
-09	.562 (14.27)	.8125 - 16UN - 3A	.434 (11.02)	-	.442 (11.23)	.229 (5.82)
-10	.625 (15.88)	.8750 - 14UNF - 3A	.480 (12.19)	-	.488 (12.40)	.255 (6.48)
-11	.688 (17.48)	1.000 - 12UNF - 3A	.542 (13.77)	-	.552 (14.02)	.304 (7.72)
-12	.750 (19.05)	1.0625 - 12UN - 3A	.604 (15.34)	-	.614 (15.60)	.304 (7.72)
-14	.875 (22.23)	1.1875 - 12UN - 3A	.729 (18.52)	-	.739 (18.77)	.304 (7.72)
-16	1.000 (25.40)	1.3125 - 12UN - 3A	.839 (21.31)	-	.851 (21.62)	.312 (7.92)
-18	1.125 (28.58)	1.500 - 12UNF - 3A	.948 (24.08)	-	.960 (24.38)	.312 (7.92)
-20	1.250 (31.75)	1.625- 12UN - 3A	1.073 (27.25)	-	1.086 (27.58)	.363 (9.22)
-24	1.500 (38.10)	1.8750 - 12UN - 3A	1.307 (33.20)	-	1.320 (33.53)	.374 (9.50)
-28	1.750 (44.45)	2.2500 - 12UN - 3A	1.542 (39.17)	-	1.557 (39.55)	.447 (11.35)
-32	2.000 (50.80)	2.500 - 12UN - 3A	1.776 (45.11)	-	1.791 (45.49)	.457 (11.61)

Dash number	C diameter +.000 -.010 (0.25) inches (mm)	D diameter ±.003 (0.08) inches (mm)	E +.015 (0.38) -.000 inches (mm)	F diameter +.002 (0.05) -.003 (0.08) inches (mm) (see notes 5 and 6)	G min inches (mm)
-08	.660 (16.76)	.462 (11.73)	.094 (2.39)	.660 (16.76)	1.130 (28.70)
-09	.722 (18.34)	.509 (12.93)	.094 (2.39)	.722 (18.34)	1.200 (30.48)
-10	.773 (19.63)	.555 (14.10)	.107 (2.72)	.773 (19.63)	1.270 (32.26)
-11	.882 (22.40)	.619 (15.72)	.125 (3.18)	.882 (22.40)	1.484 (37.69)
-12	.945 (24.00)	.681 (17.30)	.125 (3.18)	.945 (24.00)	1.556 (39.52)
-14	1.070 (27.18)	.806 (20.47)	.125 (3.18)	1.070 (27.18)	1.699 (43.15)
-16	1.195 (30.35)	.918 (23.32)	.125 (3.18)	1.195 (30.35)	1.842 (46.79)
-18	1.382 (35.10)	1.027 (26.09)	.125 (3.18)	1.382 (35.10)	1.983 (50.37)
-20	1.507 (38.28)	1.153 (29.29)	.125 (3.18)	1.507 (38.28)	2.126 (54.00)
-24	1.756 (44.60)	1.387 (35.23)	.125 (3.18)	1.756 (44.60)	2.411 (61.24)
-28	2.131 (54.13)	1.652 (41.96)	.125 (3.18)	2.131 (54.13)	2.839 (72.11)
-32	2.381 (60.48)	1.886 (47.90)	.125 (3.18)	2.381 (60.48)	3.124 (79.35)

FIGURE 1. Nipple, tube, boss - Continued.

Dash number	H inches (mm)			J inches (mm)	K inches (mm)	L inches (mm)
-08	.990 (25.15)	-	1.002 (25.45)	.633 (16.08)	.440 (11.18)	.883 (22.43)
-09	1.052 (26.72)	-	1.064 (27.03)	.633 (16.08)	.440 (11.18)	.883 (22.43)
-10	1.114 (28.30)	-	1.127 (28.63)	.747 (18.97)	.440 (11.18)	1.057 (26.85)
-11	1.301 (33.05)	-	1.314 (33.38)	.853 (21.67)	.440 (11.18)	1.163 (29.54)
-12	1.364 (34.65)	-	1.377 (34.98)	.853 (21.67)	.480 (12.19)	1.163 (29.54)
-14	1.489 (37.82)	-	1.502 (38.15)	.898 (22.81)	.480 (12.19)	1.208 (30.68)
-16	1.614 (41.00)	-	1.627 (41.33)	.908 (23.06)	.480 (12.19)	1.268 (32.21)
-18	1.738 (44.15)	-	1.752 (44.50)	.954 (24.23)	.480 (12.19)	1.314 (33.38)
-20	1.863 (47.32)	-	1.877 (47.68)	.954 (24.23)	.480 (12.19)	1.314 (33.38)
-24	2.113 (53.67)	-	2.127 (54.03)	1.079 (27.41)	.480 (12.19)	1.439 (36.55)
-28	2.488 (63.20)	-	2.502 (63.55)	1.204 (30.58)	.480 (12.19)	1.594 (40.49)
-32	2.738 (69.55)	-	2.752 (69.90)	1.329 (33.76)	.480 (12.19)	1.719 (43.66)

Dash number	M min inches (mm)	P inches (mm)			R diameter inches (mm)	Approx weight lbs/ea grams/ea
-08	.030 (0.76)	.040 (1.02)	-	.070 (1.78)	1.000 (25.40)	.044 (20)
-09	.030 (0.76)	.040 (1.02)	-	.070 (1.78)	1.062 (26.97)	.050 (23)
-10	.030 (0.76)	.050 (1.27)	-	.080 (2.03)	1.125 (28.58)	.065 (29)
-11	.030 (0.76)	.050 (1.27)	-	.080 (2.03)	1.312 (33.32)	.091 (41)
-12	.030 (0.76)	.050 (1.27)	-	.080 (2.03)	1.375 (34.93)	.100 (45)
-14	.030 (0.76)	.050 (1.27)	-	.080 (2.03)	1.500 (38.10)	.117 (53)
-16	.030 (0.76)	.050 (1.27)	-	.080 (2.03)	1.625 (41.28)	.144 (65)
-18	.030 (0.76)	.050 (1.27)	-	.080 (2.03)	1.750 (44.45)	.185 (84)
-20	.030 (0.76)	.050 (1.27)	-	.080 (2.03)	1.875 (47.63)	.203 (92)
-24	.030 (0.76)	.050 (1.27)	-	.080 (2.03)	2.125 (53.98)	.262 (119)
-28	.044 (1.12)	.050 (1.27)	-	.080 (2.03)	2.500 (63.50)	.416 (189)
-32	.044 (1.12)	.050 (1.27)	-	.080 (2.03)	2.700 (68.58)	.508 (230)

FIGURE 1. Nipple, tube, boss - Continued.

NOTES:
1. Dimensions are in inches.
2. Metric equivalents are given for information only.
3. Unless otherwise specified machined tolerances linear dimensions ±.010 inch (0.25 mm) angular dimensions ±5°.
4. Surface texture unless otherwise specified shall be 125µ inches (3.17µm) except hex, as specified in ASME B46.1.
5. Diameter F shall be free of thread marks.
6. Diameter F shall be concentric with pitch diameter of thread within .0025 inch (0.064 mm) FIM.
7. Lettering height:
   a. For sizes -08 through -16: 040 - .060 inch (1.02 - 1.52 mm).
   b. For sizes -18 and larger: .090 - .150 inch (2.29 - 3.81 mm).
8. All diameters shall be concentric within .010 inch (0.25 mm) FIM unless otherwise specified.
9. Unless otherwise specified break sharp edges .003 - .015 inches (0.08 - 0.38 mm).
10. Threads shall be in accordance with FED-STD-H28/2.

FIGURE 1. Nipple, tube, boss - Continued.

REQUIREMENTS:

Dimensions and configurations: See figure 1.

Max pressure: 1500 psi (10 MPa).

Operating temperature: -40°F to 200°F (-40°C to 93°C).

Material: Aluminum as specified in table I.

TABLE I. Materials.

Material	Form	Designator	Specification	Alloy
Aluminum alloy	Bar	Blank	SAE-AMS4121	AMS4121
		W1	SAE-AMS-QQ-A-225/9	7075-T73
		W2	SAE-AMS4124 or SAE-AMS-QQ-A-225/9	7075-T7351
	Forgings	W3	SAE-AMS4127	6061-T6
		W4	SAE-AMS-A-22771	7075-T6, T62, or T651
		W5	SAE-AMS-A-22771, SAE-AMS-QQ-A-367, or SAE-AMS4141	7075-T73
		W6		

Finish: Anodize treatment in accordance with SAE-AMS2470 for SAE-AMS4121 and for W alloys anodizing shall be in accordance with MIL-A-8625, type II, class 2.

All parts shall be fluorescent penetrant inspected in accordance with ASTM E1417.

PIN:

MS9095 -08 W

- W — Aluminum type blank or W (see table I).
- -08 — Nipple tube coupling size (see figure 1)
- MS9095 — Specification sheet number

PIN Example:

MS9095-08 identifies a nipple, tube, boss .500 inch (12.70 mm) tube, aluminum alloy AMS4121.

Do not use unassigned PIN's.

Intended usage: Jet engine, miscellaneous parts, oil, fuel, and de-icing kits.

Not to be used on hydraulic, oxygen or applications requiring pressures of 3000 psi (21 MPa).

Supersession data. Aluminum alloy designator W replaces SAE-AMS4121 (blank designator); however SAE-AMS4121 aluminum alloy (blank designator) does not replace the "W" alloys.

Changes from previous issue. Marginal notations are not used in this revision to identify changes with respect to the previous issue due to the extent of the changes.

Referenced documents. In addition to SAE-AS4841, this document references the following:

FED-STD-H28/2	SAE-AMS4124
MIL-A-8625	SAE-AMS4127
ASME B46.1	SAE-AMS4141
ASTM E1417	SAE-AMS-A-22771
SAE-AMS2470	SAE-AMS-QQ-A-225/9
SAE-AMS2800	SAE-AMS-QQ-A-367
SAE-AMS4121	

CONCLUDING MATERIAL

Custodians:
Army - AV
Navy - AS
Air Force - 99
DLA CC

Review activities:
Navy - MC
Air Force - 71, 85

Preparing activity:
DLA - CC

(Project 4730-2009-078)

NOTE: The activities listed above were interested in this document as of the date of this document. Since organizations and responsibilities can change, you should verify the currency of the information above using the ASSIST Online database at http://assist.daps.dla.mil.