FED SUP CLASS
5935

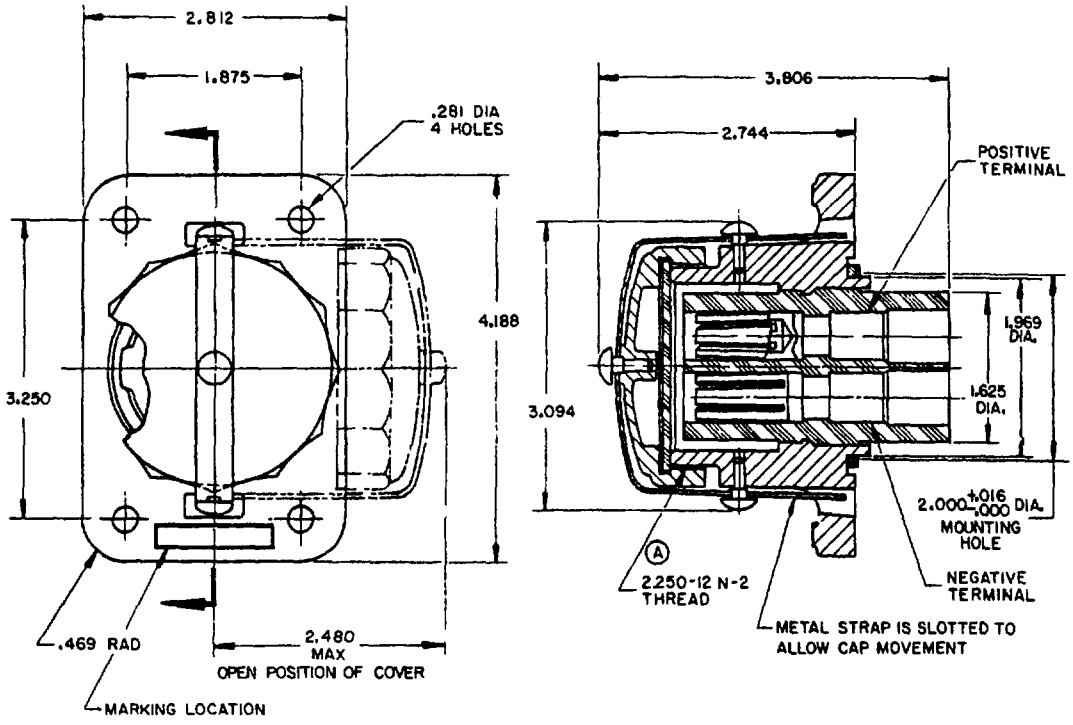

NOTES:

1. FOR MATING PLUG SEE MS 75057.
2. CONTACT CURRENT RATING IS 245 AMPS.
3. TERMINALS SHALL WITHSTAND A MINIMUM VOLTAGE DIFFERENCE OF 440 VOLTS RMS 60 CPS.
4. THREADS SHALL BE IN ACCORDANCE WITH SCREW THREAD STANDARDS FOR FEDERAL SERVICES, HANDBOOK H28.
5. DIMENSIONS SHOWN ARE IN INCHES AND ARE FOR ENGINEERING REFERENCE ONLY.
6. FOR DESIGN FEATURE PURPOSES, THIS STANDARD TAKES PRECEDENCE OVER PROCUREMENT DOCUMENTS REFERENCED HEREIN.
7. REFERENCED DOCUMENTS SHALL BE OF THE ISSUE IN EFFECT ON THE DATE OF INVITATION FOR BID.
8. MARKING SHALL CONSIST OF THE MS PART NUMBER AND MANUFACTURER'S IDENTIFICATION IN ACCORDANCE WITH MIL-STD-130.
9. DETAILS OF THIS ASSEMBLY SHALL BE IN ACCORDANCE WITH REFERENCED DRAWINGS (SEE ENGINEERING PARTS LISTS EPL 7321299) WHICH MAY BE OBTAINED FROM U.S. ARMY TANK AUTOMOTIVE COMMAND, WARREN, MICHIGAN 48090.

Ⓑ INACTIVE FOR NEW DESIGN USE ORDNANCE DRAWING 11682345
AFTER 25 MAY 1973 PROCUREMENT SPECIFICATION MIL-C-62122

MS PART NUMBER	ENGINEERING PARTS LISTS
MS 75058-1	7321299

APPROVED 13 SEPTEMBER 1963 REVISED Ⓐ 27 APRIL 1967 Ⓑ 25 MAY 1973

P A ARMY-AT Other Cust	TITLE CONNECTOR, RECEPTACLE, ELECTRICAL-SLAVE, 2 CONTACT, 24 VOLT, WATERPROOF	MILITARY STANDARD MS 75058 (AT)
PROCUREMENT SPECIFICATION NONE	SUPERSEDES	SHEET 1 OF 1

DD FORM 1 SEP 57 672-1 (Limited coordination) PREVIOUS EDITIONS OF THIS FORM ARE OBSOLETE

This military standard is approved by the U. S. Army Tank-Automotive Command, Department of the Army, and is mandatory for use by that activity. All other military activities are required to employ this standard where suitable