INCH-POUND

MS75020F
w/AMENDMENT 1
8 October 2014
SUPERSEDING
MS75020F
5 September 2013

DETAIL SPECIFICATION SHEET

CONNECTOR, PLUG, ELECTRICAL, - 12 CONTACT, INTERVEHICULAR, 28 VOLT, WATERPROOF

This specification is approved for use by all Departments and Agencies of the Department of Defense.

The requirements for acquiring the product described herein shall consist of this specification sheet.

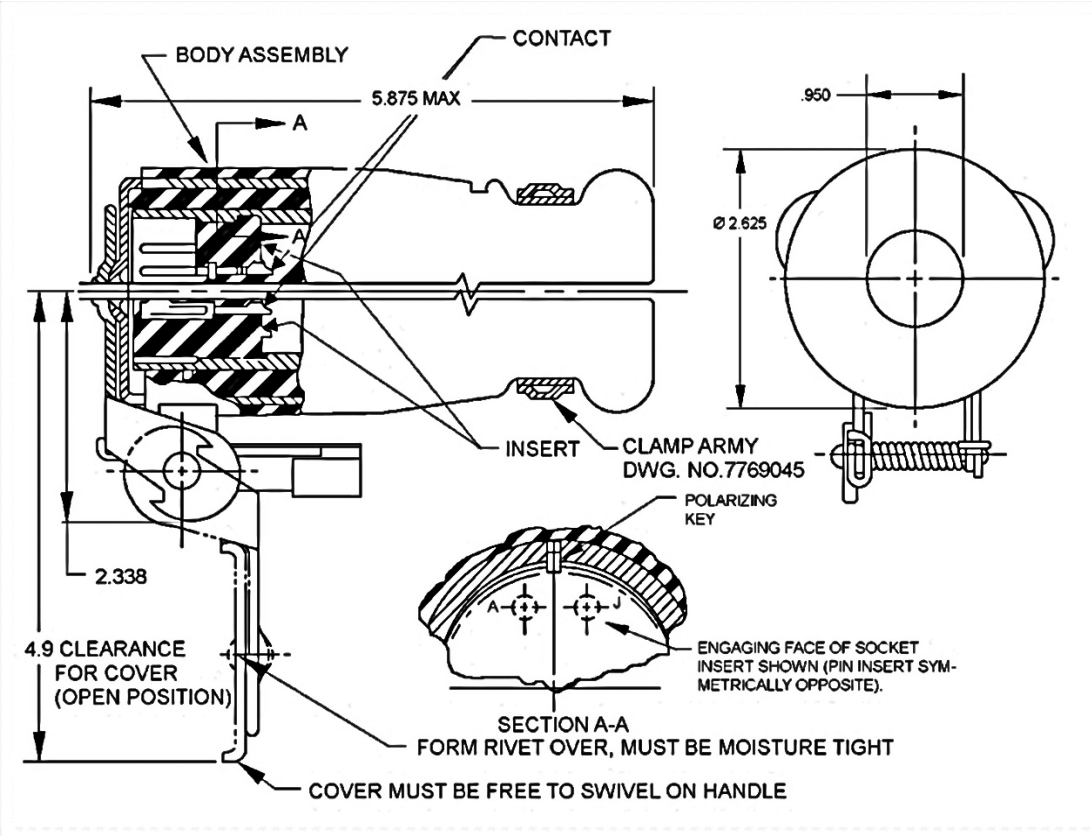

FIGURE 1. Connector, plug, electrical, intervehicular.

Inches	mm
.960	24.38
2.338	59.39
2.625	66.68
4.9	124.46
5.875	149.23

NOTES:

1. Dimension are in inches, metric equivalents are given for information only.
2. Details of this assembly shall be in accordance with drawings referenced herein and may be obtained online from www.tacom.army.mil or from US Army Tank Automotive Command, 6501 E. 11 Mile Rd. Warren, MI 48397-5000.
3. Recycled, recovered, or environmentally preferable materials should be used to the maximum extent possible provided that the material meets or exceeds the operational and maintenance requirements and promotes economically advantageous life cycle.
4. International standardization agreement implementation. This specification implements QSTAG 327 and STANAG 4007. When amendment, revision, or cancellation of this specification is proposed, the preparing activity must coordinate the action with the U.S. National Point of Contact for the international standardization agreement, as identified in the ASSIST database at https://assist.dla.mil/.

FIGURE 1. Connector, plug, electrical, intervehicular – Continued.

Requirements:

Mating receptacle: These plugs mate with receptacles specified in MS75021.

This drawing illustrates final assembly. The parts to be shipped unassembled in bag.

Electrical requirements shall be in accordance with Army drawing 10911317.

Marking shall consist of the MS PIN and manufacturer identification in accordance with MIL-STD-130.

Part or Identifying Number (PIN): See table I.

TABLE I. PIN information.

PIN	Type	Body assembly Army PIN	Insert Army PIN	Contact Army PIN
MS75020-1	Pin	8724316	8701274	7716521
MS75020-2	Socket		8701275	7716520

Amendment notations. The margins of this specification are marked with vertical lines to indicate modifications generated by this amendment. This was done as a convenience only and the Government assumes no liability whatsoever for any inaccuracies in these notations. Bidders and contractors are cautioned to evaluate the requirements of this document based on the entire content irrespective of the marginal notations.

Referenced documents. This document references the following:

MS75021
MIL-STD-130
Army drawing 10911317
Army drawing 7769045
QSTAG 327
STANAG 4007

CONCLUDING MATERIAL

Custodians:
Army – AT
Navy - YD
Air Force - 85
DLA - CC

Review activities:
Army - CR, CR4, MI
Navy – MC, SH
Air force - 99

Preparing activity:
DLA - CC

(Project 5935-2014-104)

NOTE: The activities listed above were interested in this document as of the date of this document. Since organizations and responsibilities can change, you should verify the currency of the information above using the ASSIST Online database at https://assist.dla.mil/.