THE REQUIREMENTS FOR ACQUIRING THE PRODUCT(S) DESCRIBED HEREIN SHALL CONSIST OF THIS SPECIFICATION SHEET AND THE ISSUE OF THE FOLLOWING SPECIFICATION LISTED IN THAT ISSUE OF THE DODISS SPECIFIED IN THE SOLICITATION

THIS SPECIFICATION IS APPROVED FOR USE BY ALL DEPARTMENTS AND AGENCIES OF THE DEPARTMENT OF DEFENSE.

Form Approved
OMB No 0704-0188

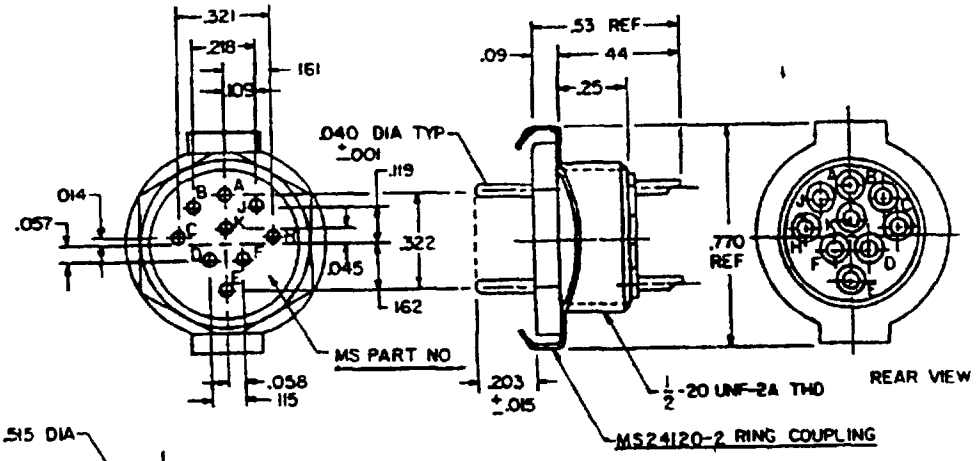

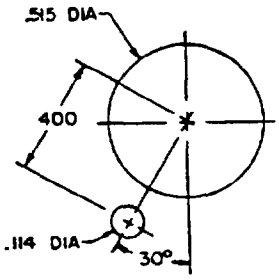

PANEL DRILLING TYP.
MAY BE ROTATED TO
PLACE TERMINALS AS
DESIRED

SUGGESTED MOUNTING
CONFIGURATION

MS PART NUMBER	VOLTAGE RATING AT 60 CPS		TEMPERATURE RATING °C
	AT SEA LEVEL VOLTS	AT 70,000 FT VOLTS	
MS24056-1	NOT APPROVED FOR USE		125
MS24056-2	425	100	150
MS24056-3	425	100	200

NOTES

1 MATING CONNECTOR IS MS24055.
2 FORCE REQUIRED TO INSERT OR WITHDRAW MATING CONNECTOR IS NOT GREATER THAN 13 POUNDS
3 MAXIMUM TOLERANCE BETWEEN ANY TWO MOLDED CONTACT CENTERS IS ±.002
4 APPLICABLE HOOD PER MS24018
5 REFERENCED DOCUMENTS SHALL BE OF THE ISSUE IN EFFECT ON THE DATE OF INVITATION FOR BIDS
6 ALL DIMENSIONS IN INCHES UNLESS OTHERWISE SPECIFIED, TOLERANCES ARE ±0 02 OR ±0 005, AS APPLICABLE, ON DECIMALS AND ±0 5° ON ANGLES
7 THIS STANDARD TAKES PRECEDENCE OVER DOCUMENTS REFERENCED HEREIN.
8 WITHOUT MS24120-2, CONNECTOR MAY BE PANEL MOUNTED, USING MS24017-2 AND LOCKWASHER, INTERNAL TOOTH, PHOSPHOR BRONZE, SHAKEPROOF NO 1924-02-00, OR EQUAL
9 THE MS PART NUMBER MARKING REQUIRED ON THE ITEM MAY BE OMITTED BY MARKING THE PACKAGES OR TAGGING THE PARTS PER MIL-STD-130.

PREPARING ACTIVITY ARMY - MI CUSTODIANS ARMY - MI NAVY - AS AIR FORCE - 85 DLA - REVIEW - AIR FORCE 17,99, DSA: ES USER PROJECT NUMBER 5935-3801-02	MILITARY SPECIFICATION SHEET TITLE CONNECTOR, PLUG-RECEPTACLE, ELECTRICAL, HEXAGONAL, 9 CONTACTS, MALE, 7.5 AMPS.	SPECIFICATION SHEET NUMBER MS24056 F 032991 SUPERSEDING REVISION E DATED 3 APR 1964 AMSC - N/A FSC - 5935
DISTRIBUTION STATEMENT "A" APPROVED FOR PUBLIC RELEASE: DISTRIBUTION IS UNLIMITED		Page 1 of 1

STANDARDIZATION DOCUMENT IMPROVEMENT PROPOSAL

INSTRUCTIONS

The preparing activity must complete blocks 1, 2, 3, and 8. In block 1, both the document number and revision letter should be given.

2. The submitter of this form must complete blocks 4, 5, 6, and 7.

3. The preparing activity must provide a reply within 30 days from receipt of the form.

NOTE: This form may not be used to request copies of documents, nor to request waivers, or clarification of requirements on current contracts. Comments submitted on this form do not constitute or imply authorization to waive any portion of the referenced document(s) or to amend contractual requirements.

I RECOMMEND A CHANGE	1. DOCUMENT NUMBER	2. DOCUMENT DATE (YYMMDD)
	MS24056F	032991

3. DOCUMENT TITLE
CONNECTOR, PLUG-RECEPTACLE, ELECTRONIC, HEXAGONAL, 9 CONTACTS, MALE 7.5 AMPS

4. NATURE OF CHANGE (*Identify paragraph number and include proposed rewrite, if possible. Attach extra sheets as needed.*)

5. REASON FOR RECOMMENDATION

6. SUBMITTER

a. NAME (Last First Middle Initial)	b. ORGANIZATION	
c. ADDRESS (Include Zip Code)	d. TELEPHONE (Include Area Code) (1) Commercial (2) AUTOVON (If applicable)	7. DATE SUBMITTED (YYMMDD)

8. PREPARING ACTIVITY

a. NAME	b. TELEPHONE (Include Area Code)	
COMMANDER U.S. ARMY MISSILE COMMAND	(1) Commercial (205) 876-6980	(2) AUTOVON 746-6980
c. ADDRESS (Include Zip Code) ATTN: AMSMI-RD-SE-TD-ST REDSTONE ARSENAL, AL 35898-5270	IF YOU DO NOT RECEIVE A REPLY WITHIN 45 DAYS, CONTACT: Defense Quality and Standardization Office 5203 Leesburg Pike, Suite 1403, Falls Church, VA 22041-3466 Telephone (703) 756-2340 AUTOVON 289-2340	

DD FORM 1426, 89 OCT