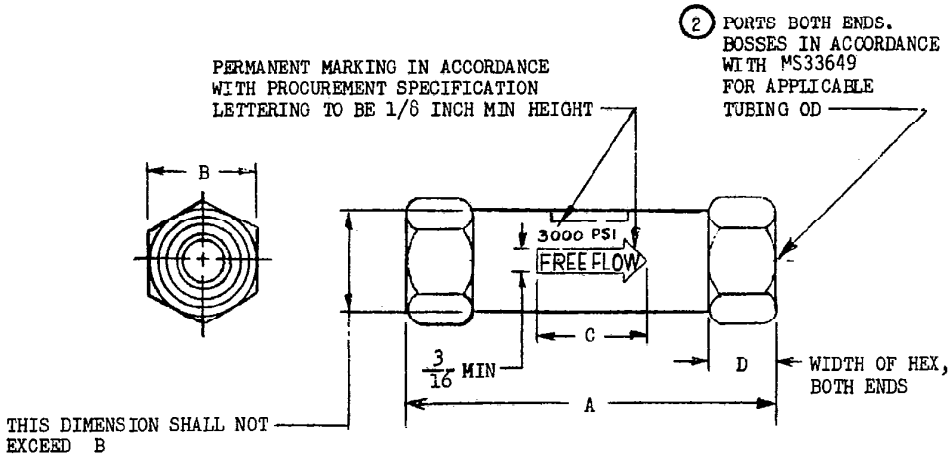

AN PART NO.	TUBING OD	RATED FLOW CAPACITY GPM	A ± 1/32	(a) B	C MIN	D MIN
AN6280-4	1/4	1.2	2-3/4	.688 +.003 -.004	7/8	5/16
AN6280-6	3/8	3.5	3	.813 +.003 -.004	1	3/8
AN6280-8	1/2	6.0	3-5/8	1.063 +.003 -.004	1	1/2
AN6280-12	3/4	16.0	4-1/2	1.438 +.003 -.004	1	5/8
AN6280-16	1	29.0	5-1/8	1.688 ±.016	1	5/8

(2) (a) AT OPTION OF THE MANUFACTURER, DIMENSION B MAY BE MADE TO CONFORM TO DIMENSION E OF DRAWING MS33656.

DIMENSIONS IN INCHES. UNLESS OTHERWISE SPECIFIED, TOLERANCE: FRACTIONS ± 1/64.

(2) DENOTES CHANGES

APPROVED 14 Jun 48 REVISED 1 5 Oct 49 (2) 1 MAR 78

PROCUREMENT SPECIFICATION	AIR FORCE-NAVY AERONAUTICAL STANDARD	AN6280
MIL-V-5524	VALVE-3000 PSI HYDRAULIC CHECK INTERNAL PORTS	

PROJECT NO. 1650-0335

NOTICE.—When Government drawings, specifications, or other data are used for any purpose other than in connection with a definitely related Government procurement operation, the United States Government thereby incurs no responsibility, nor any obligation whatsoever; and the fact that the Government may have formulated, furnished, or in any way supplied the said drawings, specifications, or other data is not to be regarded by implication or otherwise as in any manner licensing the holder or any other person or corporation, or conveying any rights or permission to manufacture, use, or sell any patented invention that may in any way be related thereto.

NOTE.—This drawing was approved by joint action of the Air Force and Navy Department as the Air Force-Navy standard for this product. This drawing supersedes all antecedent standard drawings for the same product and shall become effective for the procurement of aeronautical supplies, or for use in new design, not later than six months after the latest date of approval shown.