SUPERSEDING
MS3363(AS)
1 July 1970
MS3362(AS)
1 July 1970

MILITARY SPECIFICATION SHEET

TOOL KITS, ELECTRICAL CONNECTORS, CONTACTS, AND CONNECTOR AND CABLE ACCESSORIES: TOOL KIT FOR H46/53 HELICOPTER CONNECTOR SYSTEMS

This specification is approved for use by Naval Air Systems Command, Department of the Navy, and is available for use by all Departments and Agencies of the Department of Defense.

The complete requirements for procuring the tool kit described herein shall consist of this document and the latest issue of Specification MIL-T-83507.

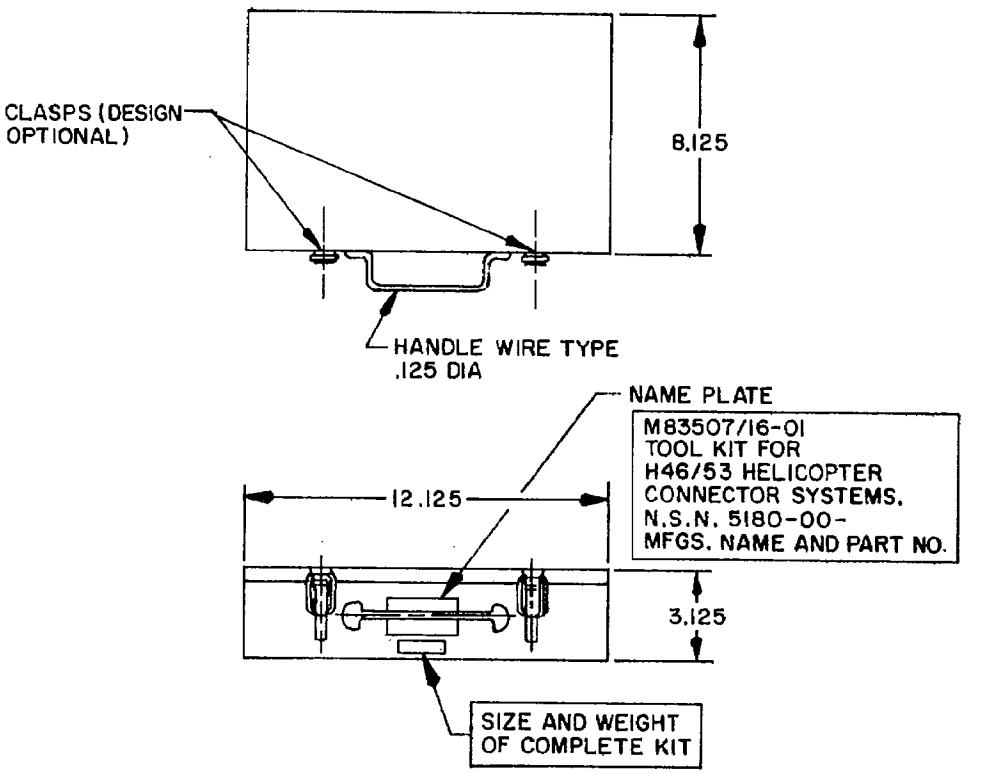

NOTES:
1. For drawing notes and metric equivalents, see figure 5.
2. Part number M83507/16-01 includes case and tools.

FIGURE 1. Tool kit for H46/53 helicopter connector systems.

PARTS LIST:

(1) M83507/16-02	-Tool case assembly.
(1) M22520/1-01	-Crimp tool frame.
(1) M22520/1-02	-Turret head.
(1) M22520/1-05	-Universal head.
(1) M22520/2-01	-Crimp tool frame.
(1) M22520/2-08	-Positioner.
(1) Daniels K127	-Positioner (or approved equivalent).
(1) M22520/3-1	-In-service inspection gage.
(1) 9/64	-Hex wrench.
(1) 66C801	-Wire stripper, hand, 16-26 AWG (or approved equivalent).
(1) M81969/19-01	-Removal tool.
(1) M81969/19-02	-Removal tool.
(1) M81969/19-06	-Removal tool.
(1) M81969/17-05	-Installing tool.
(1) M81969/17-04	-Installing tool.
(1) M81969/17-03	-Installing tool.
(2) M81969/14-02	-Installing/removal tool.
(1) Cannon CET20A	-Removal tool (or approved equivalent).
(2) Cannon CET20-11	-Removal tool (or approved equivalent).
(6) Deutsch M15570-22-1	-Installing/removal tool (or approved equivalent).
(1) Deutsch M15515-20	-Removal tool (or approved equivalent).
(1) Bendix Kit 11-7260	-Removal tool kit consisting of (1) 11-6911 handle and cap, (1) 11-3696 size 12P tip, (1) 11-3697 size 16P tip, (1) 11-3698 sizes 12S and 16S tips, (1) 11-6783 size 20P tip, and (1) 11-6784 size 20S tip (or approved equivalent.

(1 set) contents charts, instruction sheets, and part number -NSN cross reference chart.

FIGURE 1. Tool kit for H46/53 helicopter connector systems - Continued.

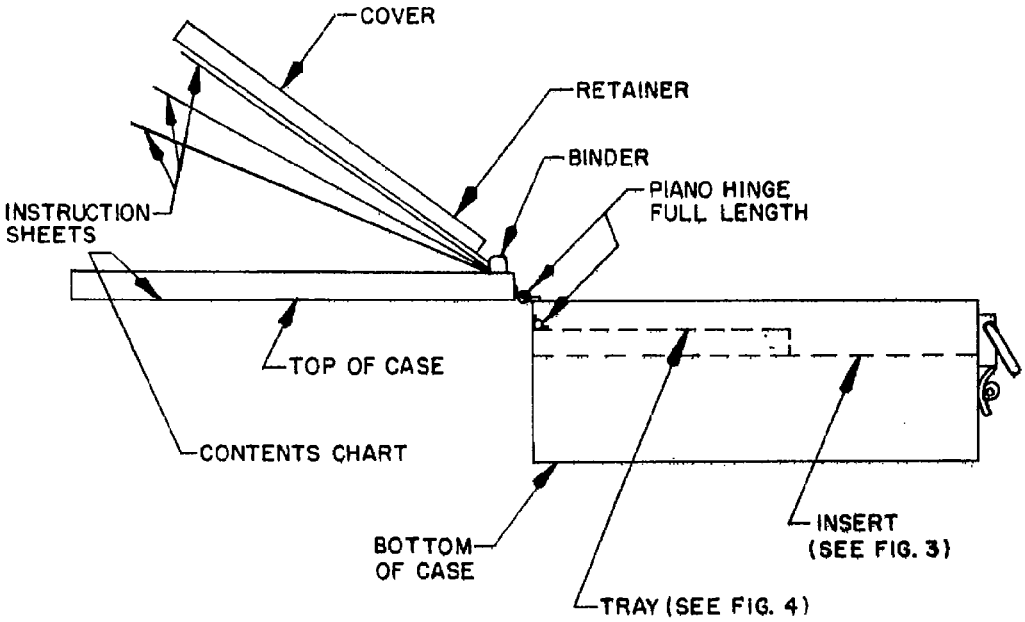

NOTES:
1. For drawing notes and metric equivalents, see figure 5.
2. Part number M83507/16-02 for case only (tools not included).

FIGURE 2. Tool case assembly.

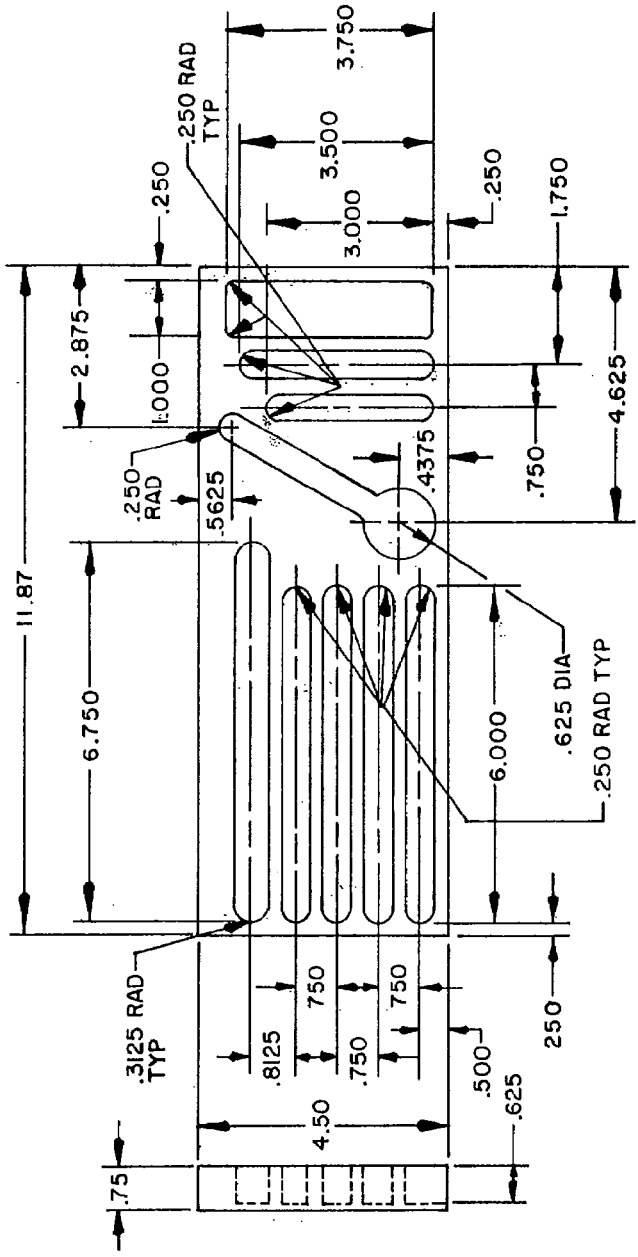

NOTES:
1. For drawing notes and metric equivalents, see figure 5.
2. This insert is part of the tool case assembly (see figure 2).

FIGURE 3. Tray insert configuration.

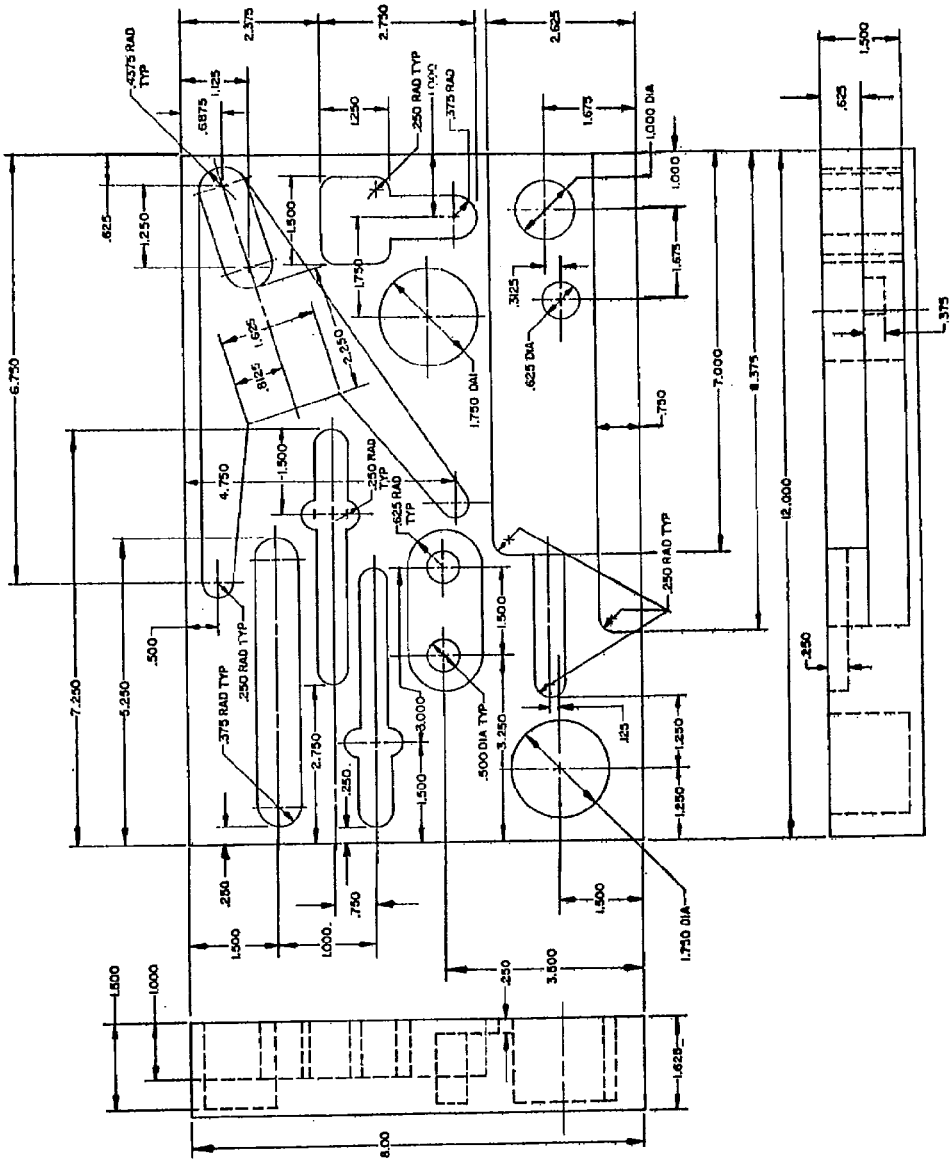

NOTES:
1. For drawing notes and metric equivalents, see figure 5.
2. This insert is part of the tool case assembly (see figure 2).

FIGURE 4. Bottom insert configuration.

INCHES	MM	INCHES	MM	INCHES	MM	INCHES	MM
.125	3.18	.8125	20.638	2.875	73.02	6.000	152.40
.250	6.35	1.000	25.40	3.000	76.20	6.125	155.58
.3125	7.938	1.125	28.58	3.125	79.38	6.750	171.45
.3750	9.525	1.250	31.75	3.250	82.55	7.000	177.80
.4375	11.112	1.500	38.10	3.500	88.90	7.250	184.15
.500	12.70	1.675	42.54	3.750	95.25	8.125	206.38
.5625	14.288	1.750	44.45	4.500	114.30	8.375	212.72
.625	15.88	2.25	57.2	4.625	117.48	11.875	301.62
.6875	17.462	2.625	66.68	4.750	120.65	12.000	304.80
.750	19.05	2.750	69.85	5.250	133.35	12.125	307.98

NOTES:
1. Dimensions are in inches.
2. Metric equivalents are given for general information only and are based upon 1.00 inch = 25.4 mm.
3. Unless otherwise specified, tolerance is ±.062 (1.57 mm).
4. Remove all burrs, break sharp edges and corners.

FIGURE 5. Drawing notes and metric equivalents.

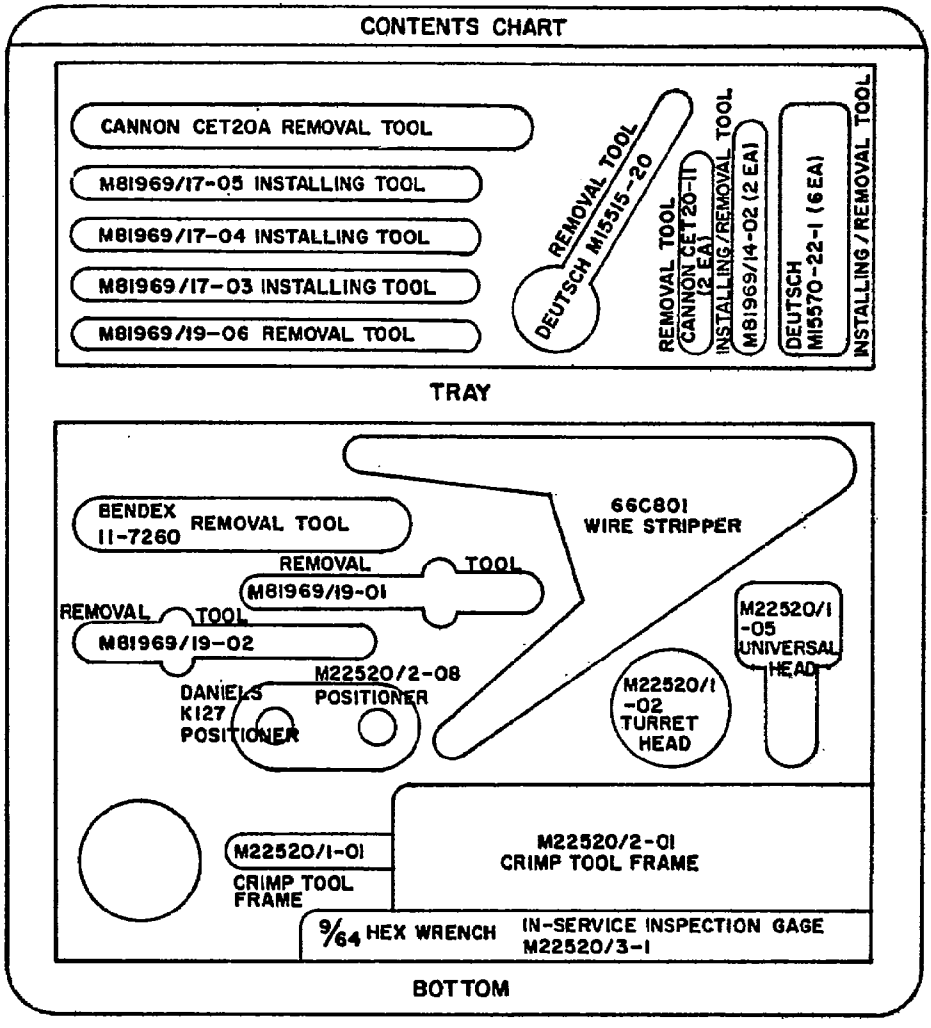
CONTENTS CHART
CANNON CET20A REMOVAL TOOL
M81969/17-05 INSTALLING TOOL
M81969/17-04 INSTALLING TOOL
M81969/17-03 INSTALLING TOOL
M81969/19-06 REMOVAL TOOL
REMOVAL TOOL
DEUTSCH MI5515-20
REMOVAL TOOL
CANNON CET20-11 (2 EA)
INSTALLING/REMOVAL TOOL
M81969/14-02 (2 EA)
DEUTSCH MI5570-22-1 (6 EA)
INSTALLING/REMOVAL TOOL
TRAY
BENDEX 11-7260 REMOVAL TOOL
66C801 WIRE STRIPPER
REMOVAL TOOL
M81969/19-01
REMOVAL TOOL
M81969/19-02
M22520/1-05 UNIVERSAL HEAD
M22520/2-08 POSITIONER
DANIELS K127 POSITIONER
M22520/1-02 TURRET HEAD
M22520/1-01
CRIMP TOOL FRAME
M22520/2-01 CRIMP TOOL FRAME
9/64 HEX WRENCH
IN-SERVICE INSPECTION GAGE M22520/3-1
BOTTOM

OPERATOR INSTRUCTIONS

INTRODUCTION

Tool kit M83507/16-01 contains the basic M22520/1-01 crimping tool and the M22520/2-01 crimping tool for crimping removable contacts used in electrical connectors. For the M22520/1-01 tool, included are the M22520/1-02 turret head assy., M22520/1-05 universal head assy., M22520/3-1 gage and 'a 9/64 inch hex wrench. For the M22520/2-01 tool, included are the M22520/2-08 positioner, positioner for RSM contacts and M22520/3-1 in-service inspection gage.

The basic M22520/1-01 crimping tool provides eight indenter closures and the basic M22520/2-01 crimping tool provides eight indenter closures. Both tools control the depth of indent by means of a positive stop. The M22520/1-01 tool will crimp wire sizes 12 AWG thru 26 AWG to contacts sizes 12, 16, and 20. The M22520/2-01 tool will crimp wire size 20 thru 32 to contacts 20 thru 28.

The M22520/1-01 basic crimping tool must have a turret attached in order to crimp properly. Each turret assembly has a data plate calling out the proper die closure for the wire size and contact being used.

The M22520/2-01 basic tool must have a positioner attached in order to crimp properly. Each positioner has a data plate calling out the proper die closure for the wire size and contact being used.

Instructions for use of installing and removal tools are found on Pages 11 and 12.

CRIMPING PROCEDURE FOR M22520/2-01 TOOL

1. The contact size, type and wire size must be known to obtain a satisfactory crimp joint. Select proper positioner as indicated on positioner chart, page 2.
2. Attach positioner as shown on page 3.
3. For proper die closure, rotate selector control until correct number is indicated. Tool must be in "FULLY OPEN" position.
4. Insert contact and wire from side opposite the positioner, close handles until tool bottoms and ratchet releases; release handles and the tool will open. (See page 3).
5. See page 4 for gaging instructions.

CRIMPING PROCEDURE FOR M22520/1-01 TOOL

1. The contact size, type and AWG wire size must be known in order to obtain a satisfactory crimp joint. Select the proper turret head assembly as indicated in Chart A, page 2, to accommodate the proper contact.
2. Attach turret head assembly to M22520/1-01 as indicated on page 6.
3. Index turret to correct positioner. See instructions for indexing on page 5.
4. Move selector control to correct selector number. Tool must be in "FULLY OPEN" position. See instructions for indenter gap selector on page 7.
5. Tool is now ready for use. Insert contact and wire through indenter opening and into the turret position. Close handle until tool bottoms and ratchet releases, release handles and tool will open.

DATA PLATES

CHART "A"

Turret Head Assy. part no.	Turret Head Assy. color	Positioner Identification	Contacts Accommodated (Ref.)
M22520/1-02	Black	(20)—Red (16)—Blue (12)—Yellow	MS3190 MS24254 MS18134 MS3192 MS24255 MS18136 MS3193 MIL-C-39029/1
M22520/1-05	Gold	The wire size settings on the M22520/1-01 basic crimping tool used with universal head assembly (M22520/1-05) meet the requirements of MIL-C-22520. When other wire/contact combinations are used selector settings must be established by the user.	

MS3190	26	24	22	20	18	16	14	12	Wire Size
-20 Red	1	2	3	4					Selector No.
-16 Blue				4	5	5			
-12 Yellow							6	7	

M22520/1-02 data plate

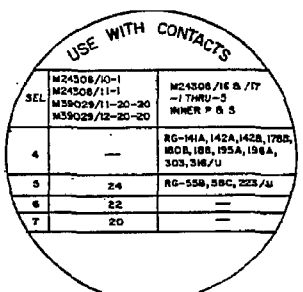

M22520/-08 POSITIONER

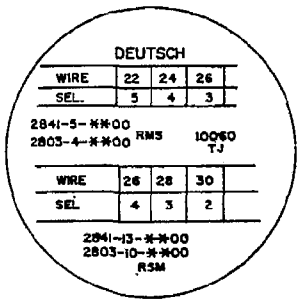

RSM POSITIONER

Each turret head assembly and positioner has a data plate containing the selector closure number for each size contact and wire accommodated.
Check data plate before installing turret head assembly or positioner to the crimp tool.

INSTRUCTIONS FOR INSTALLING POSITIONERS AND SETTING SELECTOR CONTROL M22520/2-01 TOOL

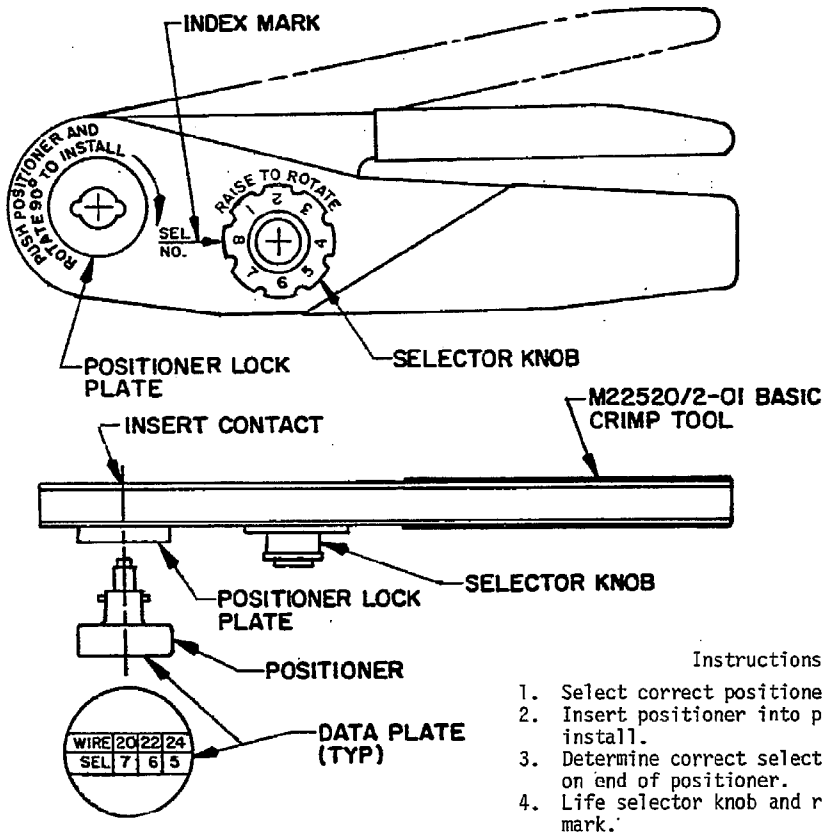

Instructions for Changing Positioners

1. Select correct positioner for contact being crimped.
2. Insert positioner into positioner lock plate. Push and rotate 90° to install.
3. Determine correct selector setting for the wire size from the date plate on end of positioner.
4. Life selector knob and rotate until selector number aligns with index mark.
5. Tool is now ready for use. Insert contact and complete crimping cycle.

Page 3

INSPECTION GAGE M22520/3-1
GAGING INSTRUCTIONS FOR M22520/1-01 AND M22520/2-01 BASIC TOOLS

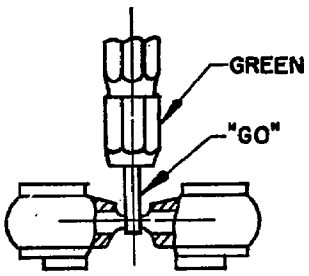

"GO" GAGING

Close handles to fully closed position. Insert "GO" gage as shown. Gage must pass freely between indenter tips.

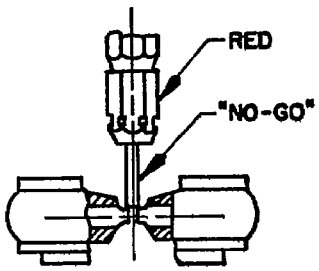

"NO-GO" GAGING

Close handles to fully closed position. Insert "NO GO" gage as shown. Gage must not enter between indenter tips. Caution: Do not crimp gage.

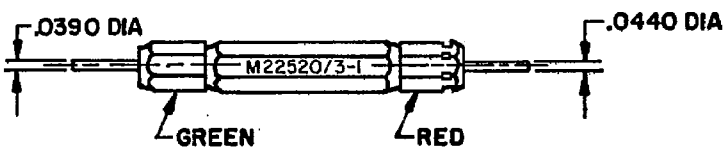

Page 4

M22520/1-01 CRIMP TOOL

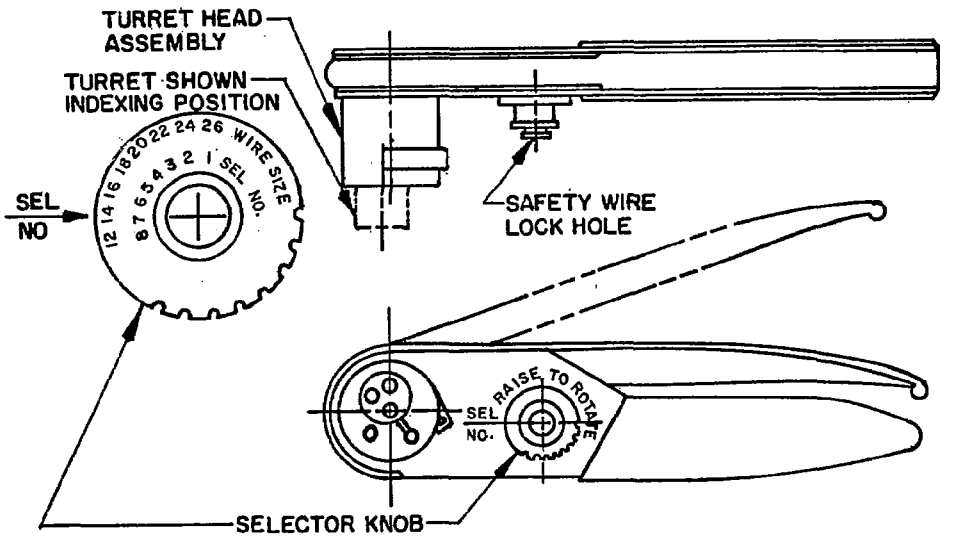

Page 5

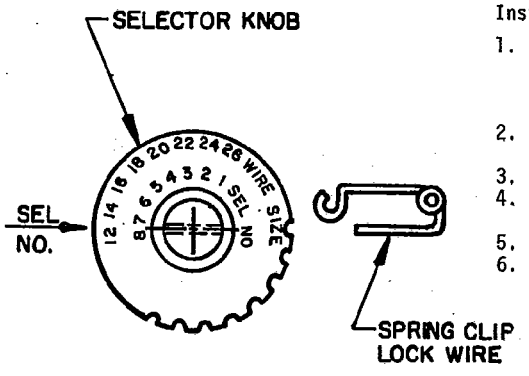

Instructions for Using Indenter Closure Selector

1. Refer to data plate on Turret Head Assembly. Below the wire size and opposite the contact size is listed the correct indenter closure number.
2. Remove the spring clip lock from selector knob.
3. Tool must be in open position when using selector.
4. Raise selector knob and rotate to desired selector number.
5. Replace the spring clip and tool is ready for use.
6. Repeat instruction procedures when changing contact and/or wire sizes.

CONTACT	COLOR CODE	26	24	22	20	18	16	14	12	WIRE SIZE
20	RED	1	2	3	4					SEL. NO.
16	BLUE				4	5	6			
12	GREEN							7	8	

TYPICAL DATA PLATE

Page 6

INSTRUCTIONS FOR INDEXING TURRET M22520/1-01 CRIMP TOOL

1. Press trigger and spring loaded turret will snap out to indexing position.
2. Select positioner desired from color coded data plate on side of turret head assembly (Chart A, page 2).
3. Index turret until color coded positioner is lined up with index mark on top of turret head assembly, at which time the trigger will position the turret.
4. Press turret until it snaps into locked position.

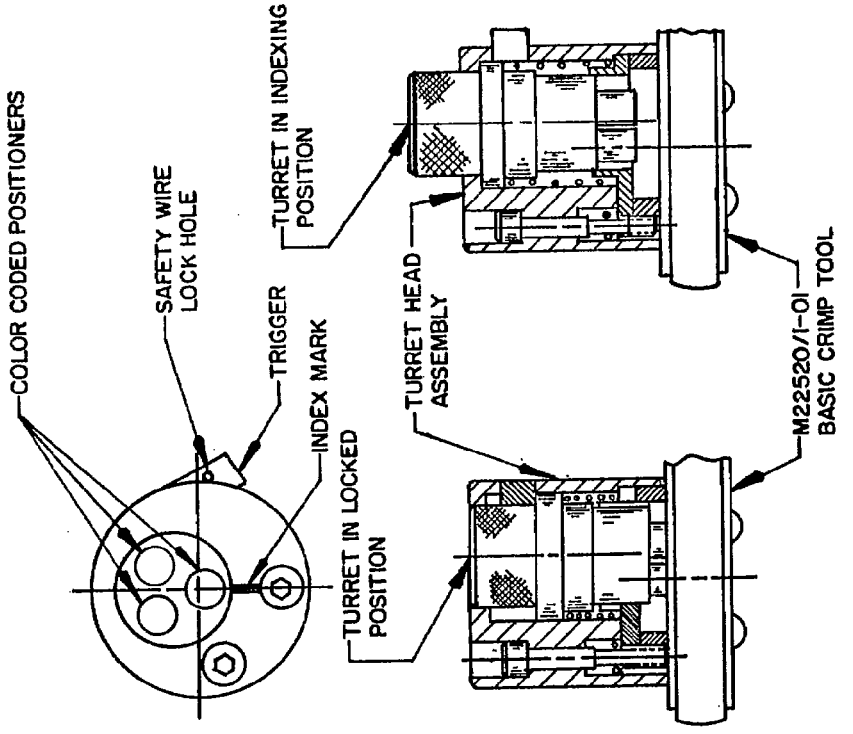

Page 7

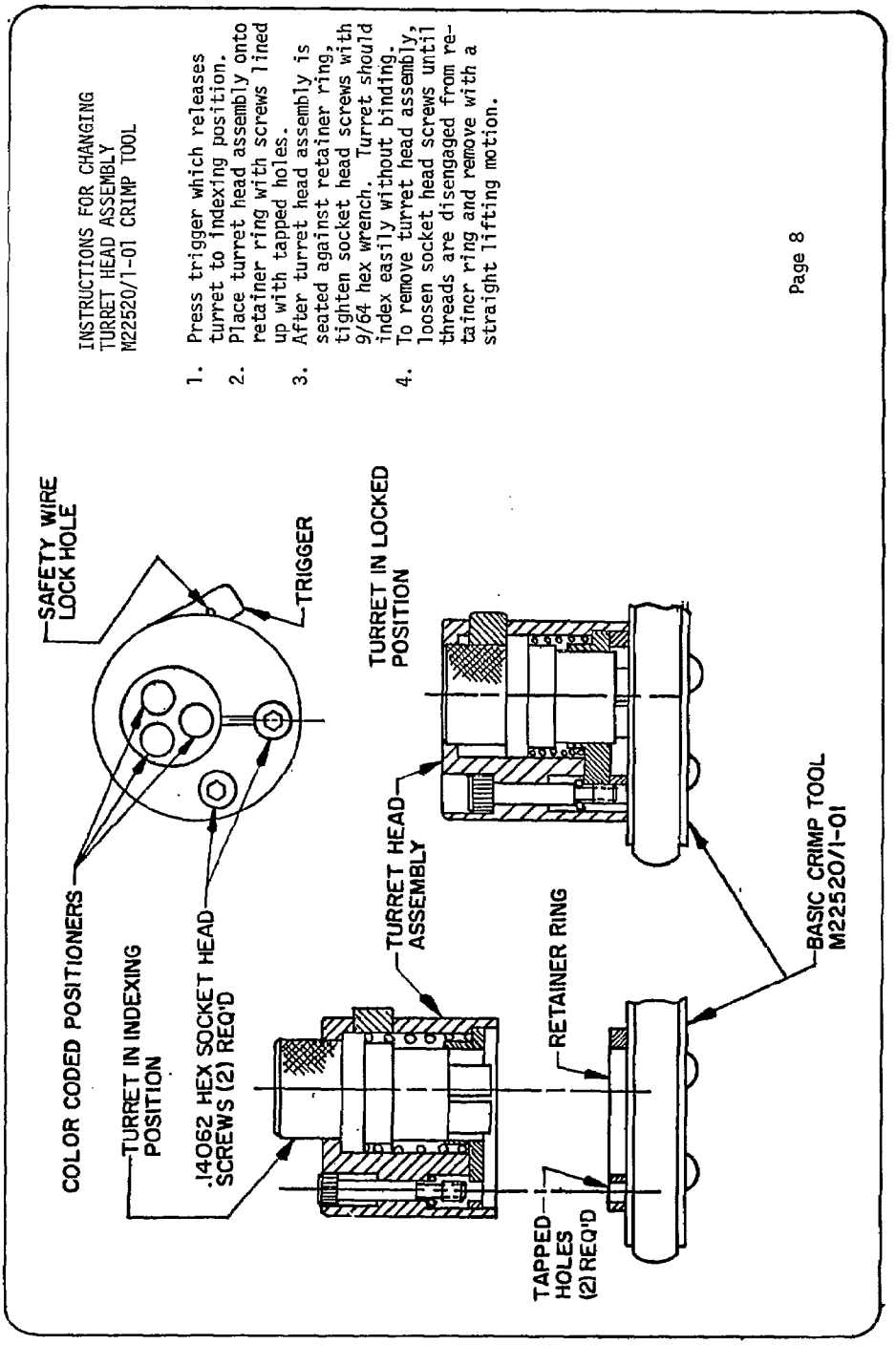

INSTRUCTIONS FOR CHANGING
TURRET HEAD ASSEMBLY
M22520/1-01 CRIMP TOOL

1. Press trigger which releases turret to indexing position.
2. Place turret head assembly onto retainer ring with screws lined up with tapped holes.
3. After turret head assembly is seated against retainer ring, tighten socket head screws with 9/64 hex wrench. Turret should index easily without binding.
4. To remove turret head assembly, loosen socket head screws until threads are disengaged from retainer ring and remove with a straight lifting motion.

Page 8

M22520/1-05 UNIVERSAL HEAD ASSEMBLY.

1. Raise and Rotate Selector Knob until arrow is in line with wire size to be crimped in contact, wire size settings based on use of MIL-W-16878 silver plated stranded wire crimped in MS3190 Military Contact Wire Barrel. User must establish his own settings on other contact/wire combinations.
2. With Lock - Nut in release position, turn adjustment screw IN until it stops. Insert contact thru indenter opening into positioner and adjust screw OUT until indenters are centered between inspection hole and barrel end of contact. When contact contains insulation cup, center between inspection hole and bottom of insulation cup.
3. Tighten Lock - Nut to body and tool is ready for crimping operation.
4. Insert wire into contact and hold securely to insure that it bottoms in contact. Close handles until tool bottoms and ratchet 'Kicks Off'. Release handles and remove crimped contact.

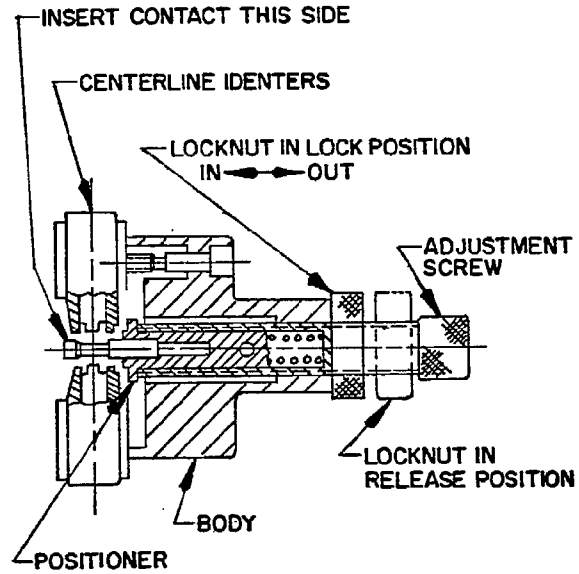

Page 9

OPERATING INSTRUCTIONS - INSTALLING TOOLS

1. Select correct installing tool from TABLE I and place contact/wire assembly in tool.
   a. #20 contacts with insulation cups are inserted by sliding cup into front end of installing tip until end of cup butts against shoulder in installing tip, as shown in figure I.
   b. Contacts without insulation cups are inserted by sliding wire barrel into front end of installing tip until contact shoulder butts against installing tip. Figure II.
2. Align tool and contact axially with grommet hole and carefully guide contact through grommet to lock position. Figure III.

TABLE I

INSTALLING TOOL	CONTACT SIZE
M81969/17-03	20
M81969/17-04	16
M81969/17-05	12

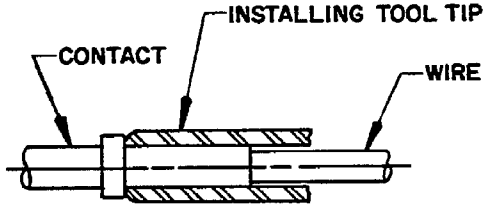

FIG. II

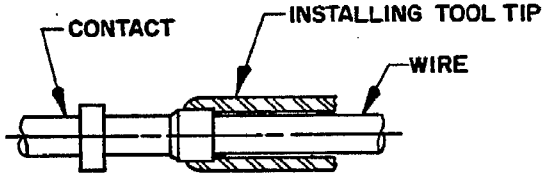

FIG. I

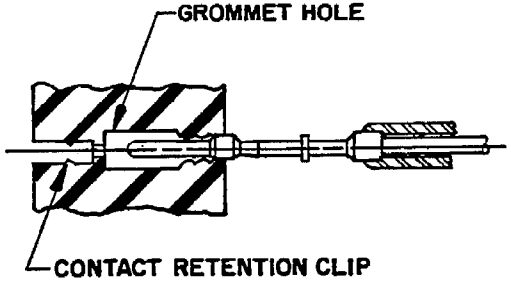

FIG. III

OPERATING INSTRUCTIONS - REMOVAL TOOLS

1. Select the correct removal tool for the contact to be removed from TABLE II.
2. Slide rear accessories back on the wire bundle.
3. Working from the front or mating end of the connector, slip the hollow end of the removal tool over the contact, with the tool parallel to the contact, and squarely perpendicular to the insert face.
4. Push the tool toward the rear of the connector with a firm steady push until the tool comes to a positive stop and bottoms in the insert hole. A slight rotation of the tool may aid the tool insertion.
5. Push the thrust assist collar or slide forward as far as it will go.
6. Withdraw the tool from the contact, keeping the tool perpendicular to the insert face.
7. Remove the contact from the back of the connector.

CAUTION: Make sure the removal tool is always exactly aligned with the contact to avoid damage to the contact or to the insert.

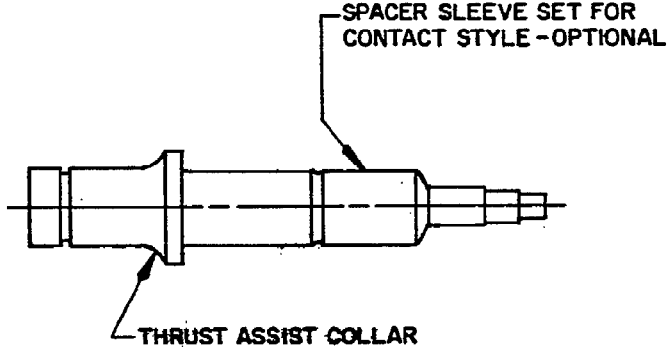

TABLE II

REMOVAL TOOL	CONTACT SIZE
M81969/19-06	20
M81969/19-01	16
M81969/19-02	12

REQUIREMENTS:

Design and configuration: See figures 1 through 5.

Materials:
Case, cover, and tray (category 3): Sheet metal, 19 gage in accordance with QQ-S-698; gray baked enamel on all metal parts.
Instruction sheets and contents chart: White vinyl 0.020 inch (0.51 mm) thick.
Insert and retainer pad: Fire retardant foamed polyethylene in accordance with PPP-C-1752; color is optional.

Clasps, draw pull type with provision for locking device, handles, and hinges: Suitably plated to resist corrosion.

Nameplate: In accordance with MIL-P-19834.

Binder: Looseleaf, three-ring, 0.437 inch (11.1 mm) ±0.062 inch (1.57 mm) I.D., 2.75 inches (69.9 mm) center distance between rings, securely riveted to inside of cover.

Instruction sheets and contents chart (see pages 3 through 17): Lettering shall be legible and protected with a transparent coating. Contents chart (centered on inside of case cover) shall have pressure sensitive adhesive backing and show the insert cavity configurations and the respective tool part numbers; a list of NSN's will also be supplied.

Part number:
M83507/16-01 - Tool kit for H46/53 helicopter connector systems.
M83507/16-02 - Tool case assembly.

QUALIFICATION:
Qualifying activity: Naval Weapons Support Center (code 30633), Crane, Indiana 47522.

Custodian:
Navy - AS

Review activities:
Navy - EC
DLA - ES

User activities:
Navy - MC

Preparing activity:
Navy - AS

Agent:
DLA - ES

(Project 5180-N118)