MILITARY SPECIFICATION SHEET

TOOL KITS, ELECTRICAL CONNECTORS, CONTACTS, AND CONNECTOR AND CABLE ACCESSORIES: TOOL KIT, GENERAL PURPOSE, BACKSHELL HARDWARE TOOLS

This specification sheet is approved for use by all Departments and Agencies of the Department of Defense.

The complete requirements for procuring the tool kit described herein shall consist of this document and the latest issue of Specification MIL-T-83507.

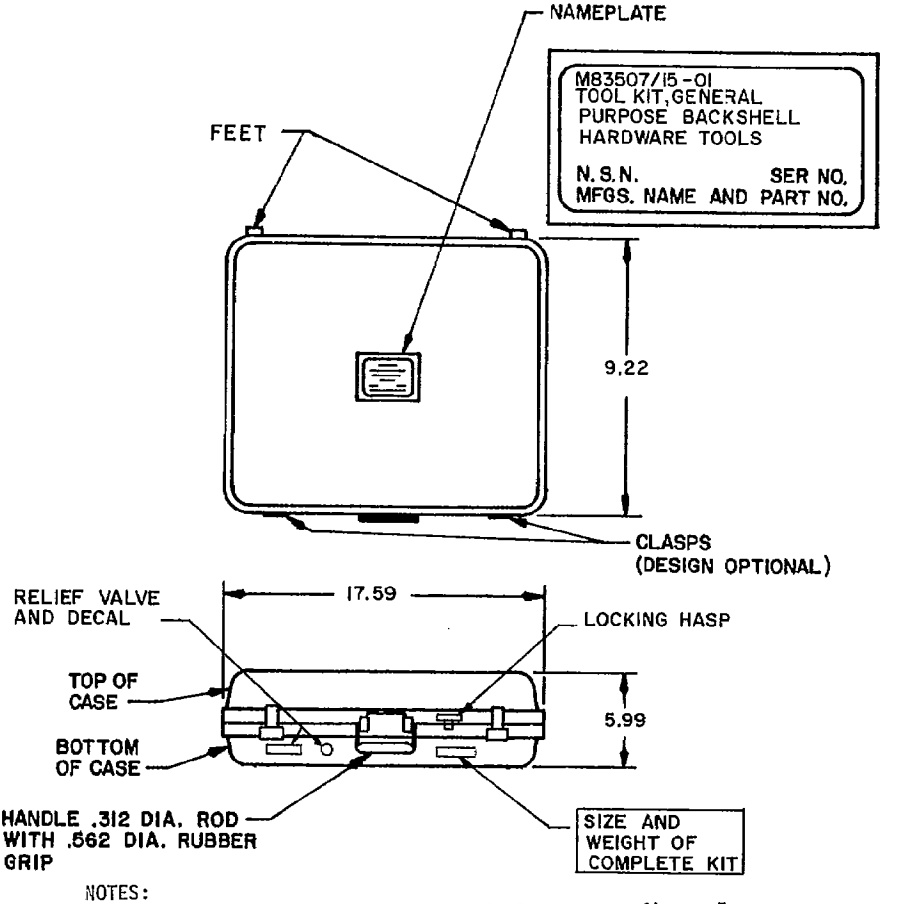

NOTES:
1. For drawing notes and metric equivalents, see figure 5.
2. Part number M83507/15-01 includes case and tools.

FIGURE 1. Tool kit, general purpose, backshell hardware tools.

1/ This specification sheet supersedes only part numbers M22520/13-03 and 06.

FSC 5180

PARTS LIST:

(1)	M83507/15-02	- Tool case assembly.
(1)	Glenair G79005	- Straight handle (1/4 drive each end) (or approved equivalent).
(1)	Glenair G79006	- Tee handle (1/4 drive) (or approved equivalent).
(1)	Glenair TG73	- Strap wrench 1.25 inch (31.8 mm) maximum diameter (or approved equivalent).
(1)	Glenair TG74	- Strap wrench 2.50 inches (63.5 mm) maximum diameter (or approved equivalent).
(1)	Glenair G79008	- Adapter, 3/8 to 1/4 drive (or approved equivalent).
(1)	Glenair G79007	- Shaft extension 14.00 inches (355.6 mm) (or approved equivalent).
(1)	Glenair TG70	- Strap wrench 3.00 inch (76.20mm) maximum diameter (or approved equivalent).
(1)	Glenair TG69-P	- Pliers, soft jaw (or approved equivalent).
(1)	Glenair G79010	- Pencil, marking (or approved equivalent).
(1)	Glenair TG76-1	- Pliers, parallel jaw (or approved equivalent).
(1)	Glenair TG76-2	- Pliers, parallel jaw (or approved equivalent).
(1)	Glenair TG76-3	- Pliers, parallel jaw (or approved equivalent).
(1)	Glenair TG76-4	- Pliers, parallel jaw (or approved equivalent).
(1)	Glenair TG76-5	- Pliers, parallel jaw (or approved equivalent).
(1)	Glenair TG76-6	- Pliers, parallel jaw (or approved equivalent).
(1)	Glenair GTSQ150	- Wrench torque (0 - 150 inch pounds (or approved equivalent).
(1)	MS90387	- Tool, hand, adjustable for plastic tie-down straps.
(1 Set)	Contents charts, instruction sheets, and tool selection chart.	

FIGURE 1. Tool kit, general purpose backshell hardware tools (continued).

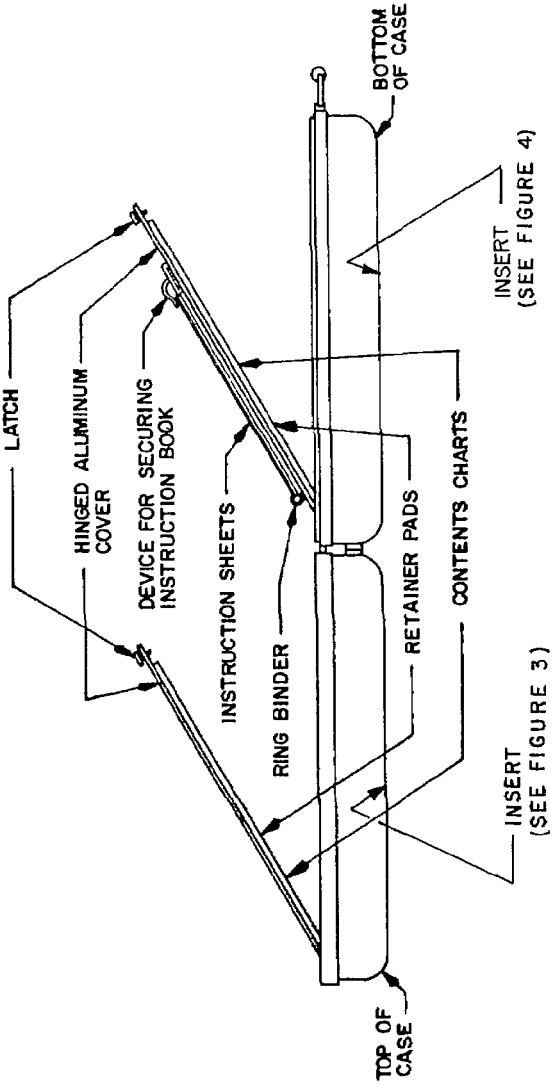

NOTES:
1. See figure 5, note 4.
2. Part number M83507/15-02 for case only (tools not included).

FIGURE 2. Tool case assembly.

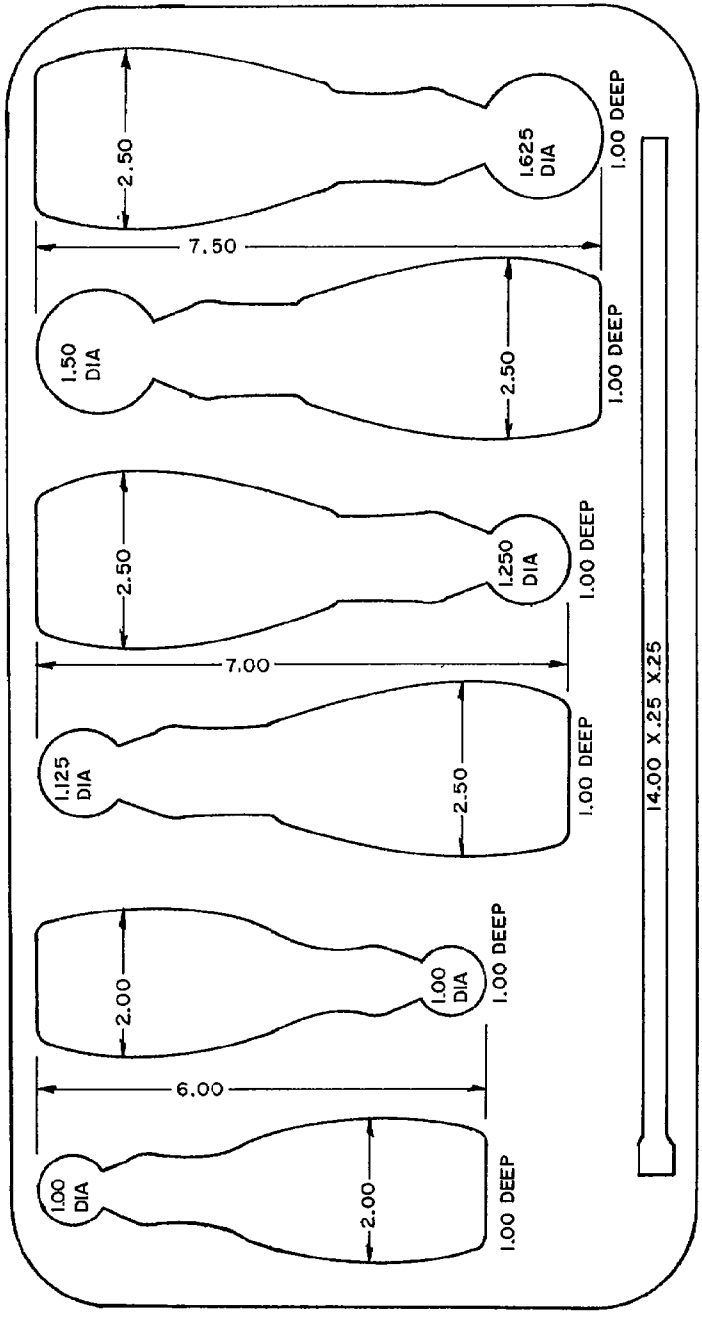

NOTES:
1. For drawing notes and metric equivalents, see figure 5.
2. This insert is part of the tool case assembly (see figure 2).

FIGURE 3. Insert (top of case).

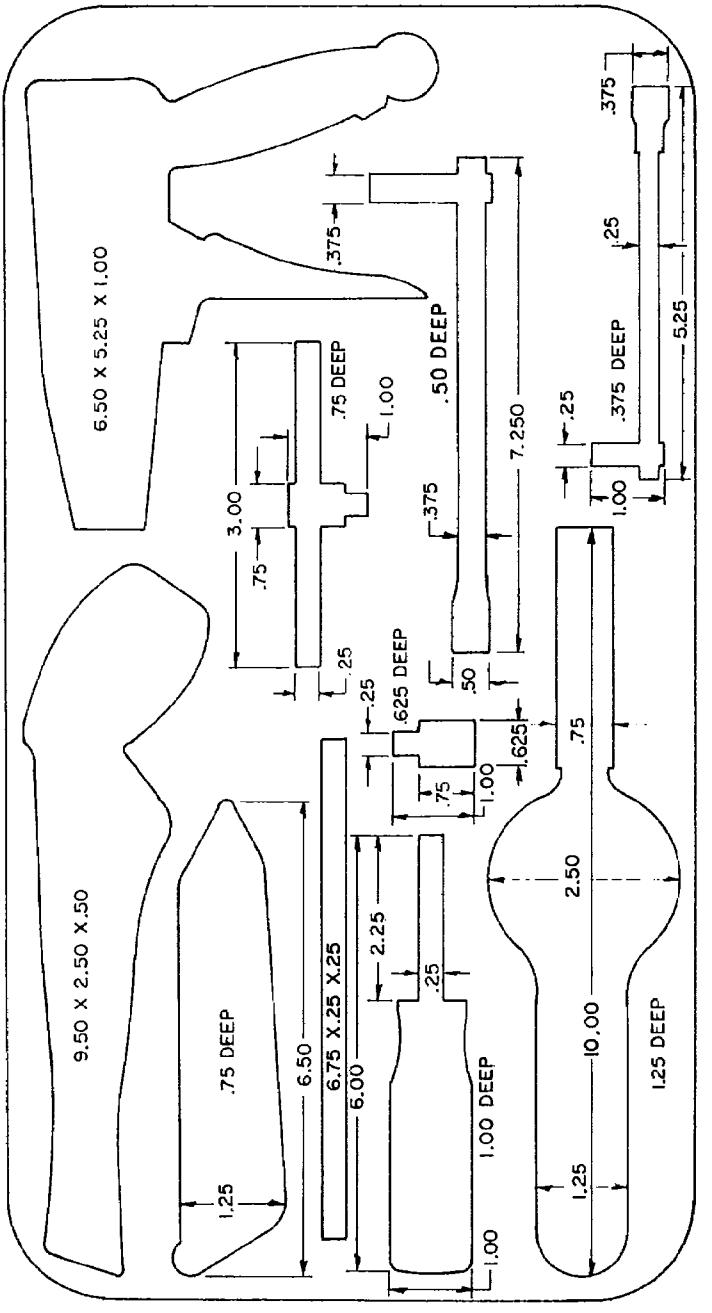

NOTES:
1. For drawing notes and metric equivalents, see figure 5.
2. This insert is part of the tool case assembly (see figure 2).

FIGURE 4. Insert (bottom of case).

INCHES	MM	INCHES	MM	INCHES	MM
.25	6.4	1.50	38.1	6.75	171.4
.312	7.92	1.625	41.28	7.00	177.8
.375	9.52	2.00	50.8	7.25	184.2
.50	12.7	2.25	57.2	7.50	190.5
.562	14.27	2.50	63.5	9.22	234.2
.625	15.88	3.00	76.2	9.50	241.3
.75	19.0	5.25	133.4	10.00	254.0
1.00	25.4	5.99	152.1	14.00	355.6
1.125	28.58	6.00	152.4	17.59	446.8
1.250	31.75	6.50	165.1		

NOTES:
1. Dimensions are in inches.
2. Metric equivalents are given for general information only and are based upon 1.00 inch = 25.4 mm.
3. Unless otherwise specified, tolerance is ±.125 (3.18 mm).
4. Remove all burrs, break sharp edges and corners.

FIGURE 5. Drawing notes and metric equivalents.

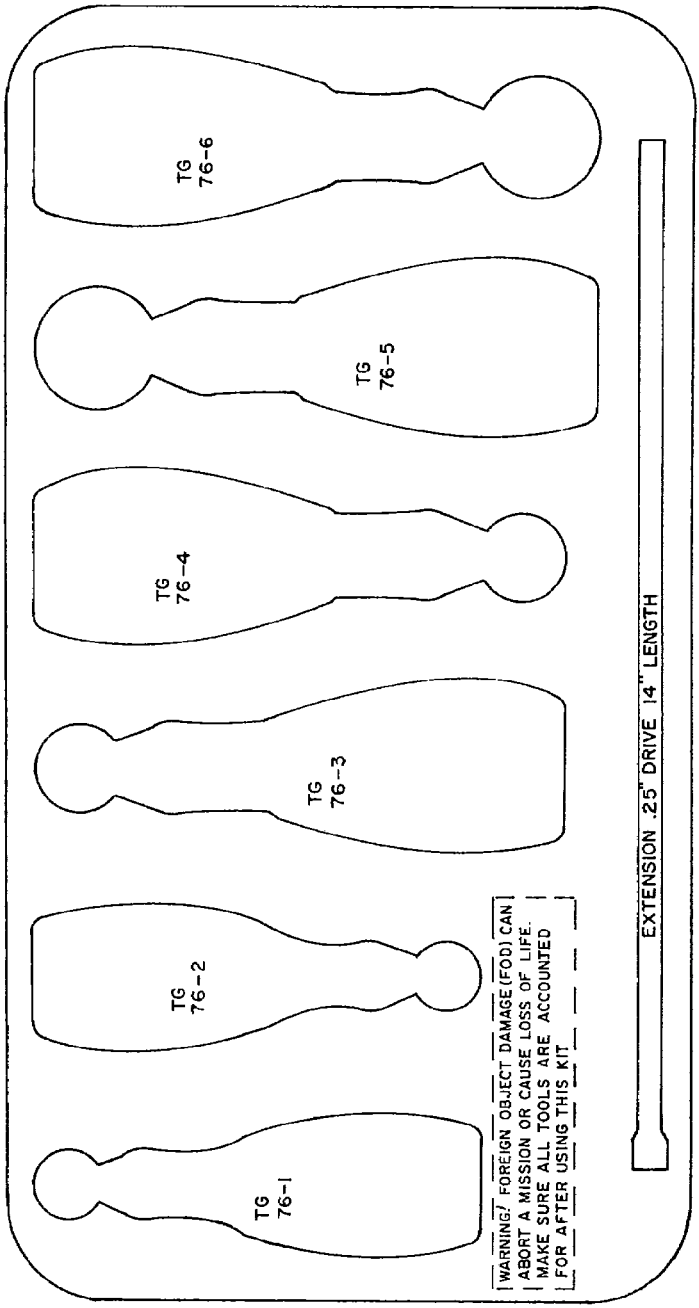

CONTENTS CHART (TOP OF CASE)

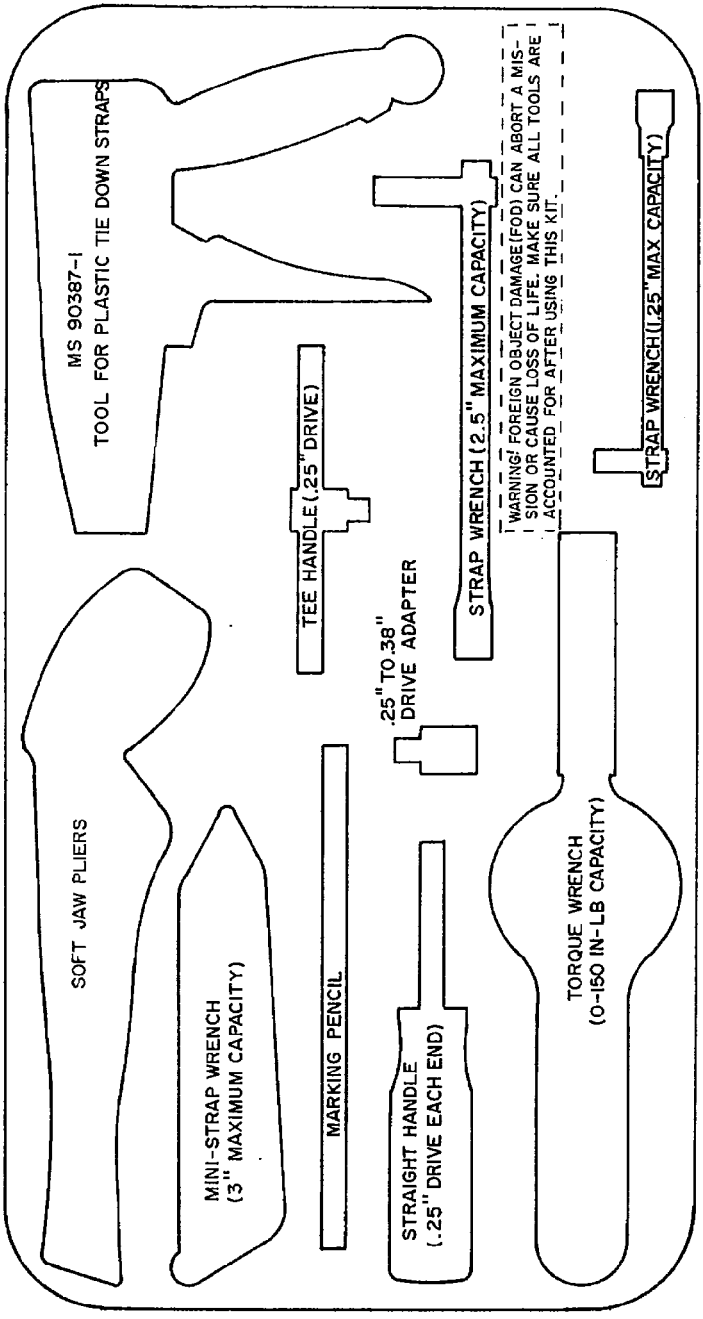

CONTENTS CHART (BOTTOM OF CASE)

INSTRUCTION MANUAL

TOOL KIT IS DESIGNED FOR FIELD USE WITH CIRCULAR ELECTRICAL CONNECTORS. THE PRODUCTS INCLUDED WITH THIS KIT FIT MOST CONNECTORS COVERED BY MILITARY SPECIFICATIONS, AND ARE USED FOR HOLDING DURING ASSEMBLY AND DISASSEMBLY OF REAR CLAMP AND ADAPTER HARDWARE, AND TO FACILITATE CONNECTOR FIELD REPAIRS AND SERVICING.

NSN 5180-01-026-0310 SERIAL NUMBER
MFGS NAME PART NUMBER

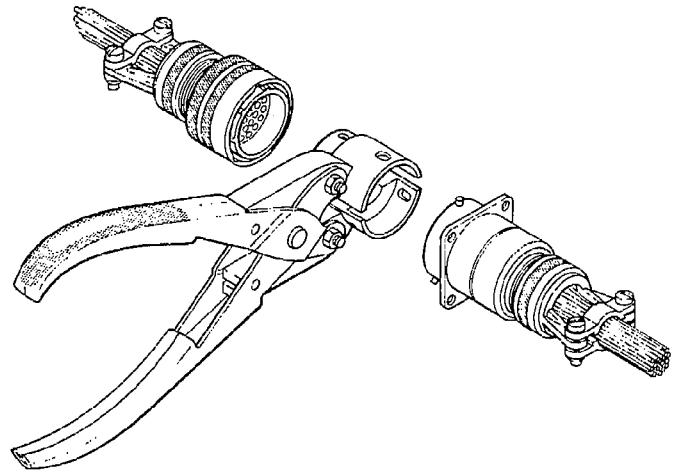

AN INTRODUCTION TO THE

Tool kit is specifically designed for safe and proper assembly and disassembly of circular electrical connectors without marring or damaging the connectors. The kit consists of the following tools:

Strap Wrenches; Soft Jaw Pliers
Parallel Jaw Pliers
Torque Wrench
Drive Adaptar (1/4" to 3/8")
Tee Handle (1/4" drive)
Extension (14" long 1/4" drive)
Plastic Tie Down Strap Installation Tool

All tools are contained in a unique fiberglass carrying case. The tools provide the solution for many delicate, hard-to-reach and hard-to-handle parts during the assembly or disassembly of circular electrical connectors.

The strap wrenches are engineered for infinite adjustment to a wide range of diameters. The maximum grip diameters of the strap wrenches are 1-1/4", 2-1/2", and 3". The strap material, a ex-clusive, is manufactured of special reinforced, high-tensile strength composition providing long service life. Its anti-slip surface will not mar metal or plastic, and there is no metal-to-metal or metal-to-plastic contact between wrench and connector. The 3" grip diameter wrench is provided with a 3/8" square drive to accommodate the torque wrench of the tool kit.

The parallel jaw pliers are precision machined, each with two different size gripping jaws. Each jaw size is capable of holding several shell sizes. Slots machined in the jaws of the pliers provide clearance for bayonet pins on receptacle connectors.

The torque wrench is precision constructed and has a torque range of 0 to 150 inch pounds. When used in conjunction with the 3" diameter strap wrench, the torque wrench gives controlled accurate tightening. Controlled tightening is particularly desirable for connectors and accessories used in EMI/RFI applications. (Torque wrench is optional).

The tee handle and straight handle are used in conjunction with the 1-1/4" and 2-1/2" strap wrenches and when coupled with the extension, provide an excellent method for reaching into in-accessible areas.

The carrying case is specially constructed of fiberglass providing high resistance to impact, moisture, weather, corrosion, and thermal shock. The carrying case dimensions are approximately 18" long, 10" wide, and 6" deep. The case is fully foam lined with contoured cut-outs to accommodate the tools. Two fly-sheets, showing orientation of the tools and secured to each half of the case by fasteners, are provided to hold the tools securely in place. Weight, approximately 29 pounds, volume, .6 cubic feet.

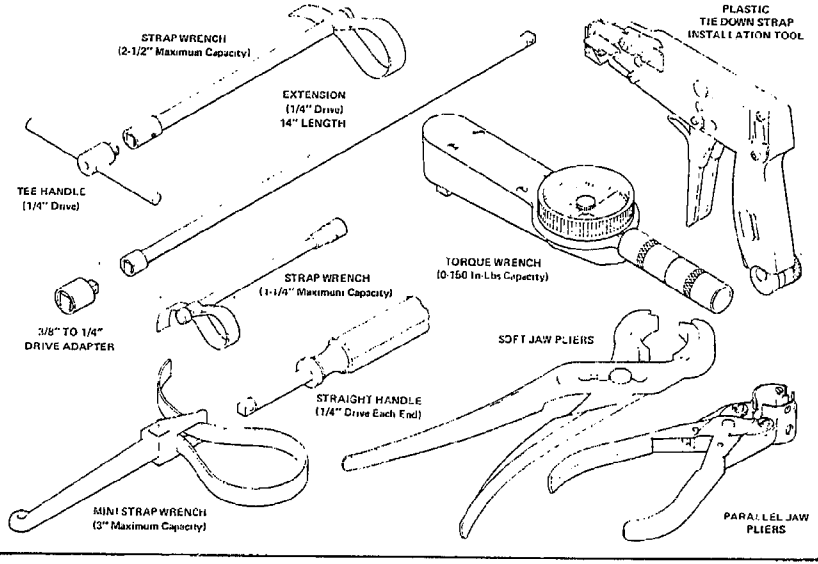

A WORD ABOUT . . .

CONNECTORS AND TOOLS

- Part Numbers. Some connectors are manufactured to Military Specifications. These contain the applicable Military Specification number and the plug/receptacle size. Some connectors are manufactured to commercial specifications and may not contain the size of the connector. Refer to the cross reference index for part number explanation.
- Contacts are easily damaged. Use care when exposed pin contacts are in the connector.
- Plugs, receptacles and associated accessories are fabricated to precise dimensions. They are precision electrical and mechanical devices. Use care and follow the instructions when servicing.
- Various families of connectors may be similar in appearance, and use the same size number, but have different shell diameters, and hence require different tools to be used. A cross reference list in the Instruction Manual serves to identify plug or receptacle part numbers, size, and tool size to be used.

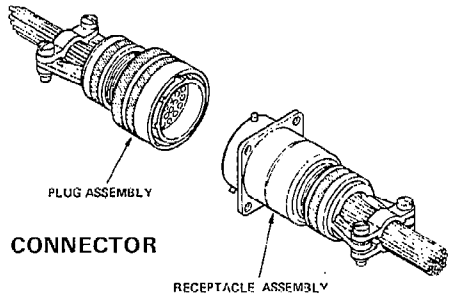

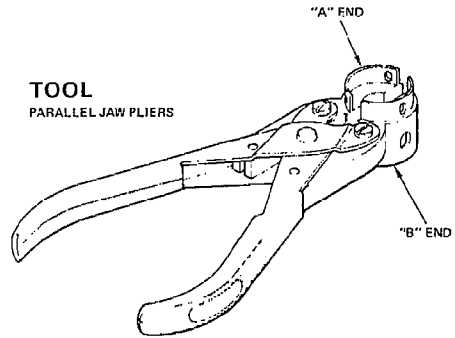

- Consists of two socket ends on each tool. "A" end is the small end. "B" end is large end.
  Either end "A" or "B" may be used for plug or receptacle holding. See Tool Selection Chart for details.

- Tool sockets are machined to precise tolerances, made from high grade heat treated steel.
  Unique parallel action provides the tool with a capability of servicing many different plug and receptacles.
- Tool is designed to go over the outside diameter of the receptacle shell and between the plug shell and coupling ring. Careful use will result in function without damage to the connector.
  Tool must never be inserted inside the connector in the pin/socket contact area.
- Not recommended for use on any threaded surface.
- The adjustment of the tool to the connector is accomplished by parallel action of jaws. After initial use the user will become more skilled in quickly fitting tool and connector.
- The inside of each tool socket is coated with a dry lubricant film. Use normal care to prevent damage to connector surfaces.

Refer to Instructions for Plug/Receptacle use.

2B

INSTRUCTIONS FOR USE WITH . . .

PLUG CONNECTORS

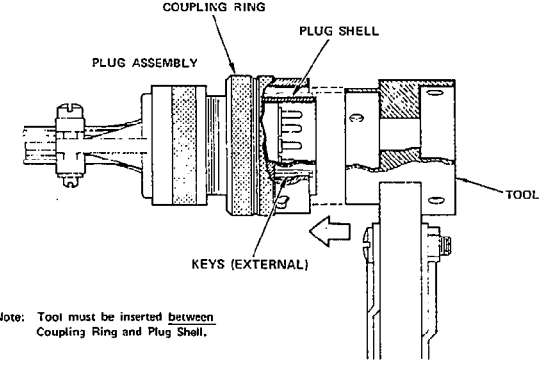

Note: Tool must be inserted between Coupling Ring and Plug Shell.

- Plug Connector consists of a shell - a coupling ring and usually some type of rear accessory.
- The shell usually contains (5) keys on the outside of the shell and is almost completely enclosed by the coupling ring.
- The coupling ring is usually knurled on the outside diameter, rotates on the plug shell and is designed to couple the plug to the receptacle.
- Refer to the Tool Selection Chart to select the proper tool...note if "A" or "B" end.
- Adjust the tool to the approximate size by visual observation.
- Note that the tool must be inserted over the keys and inside the coupling ring. Keep the tool out of contact area to avoid damage to contacts. Carefully fit the tool into the plug shell coupling ring space.
- Apply only sufficient medium pressure to hold the plug.*

  * With familiarity, the user will quickly develop skill in this area.

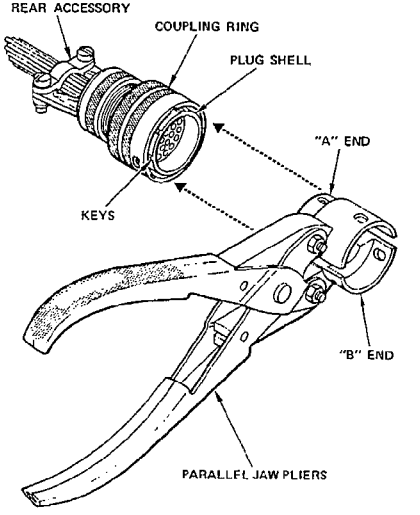

INSTRUCTIONS FOR USE WITH . . .

RECEPTACLE CONNECTORS

- Receptacle Connector consists of a shell - 3 bayonet pins fastened into the end of the shell, and usually some type of rear accessory.
- Receptacles are most often mounted into a bulkhead, instrument box, panel or similar mounting area. Sometimes the receptacle is mounted "in line" in the cable.
- Refer to the Tool Selection Chart to select the proper tool. Note if "A" or "B" end.
- Open the tool and slide over the bayonet pins. Fit the pins into the (2) bayonet pin slot holes and the bayonet pin relief slot.
- Check to see that the bayonet pins are in the slot holes and relief slot.
- Apply only sufficient medium pressure to hold the receptacle.*
- Tool is not recommended for use with threaded coupling receptacles.

* With familiarity the user will quickly develop skill in this area.

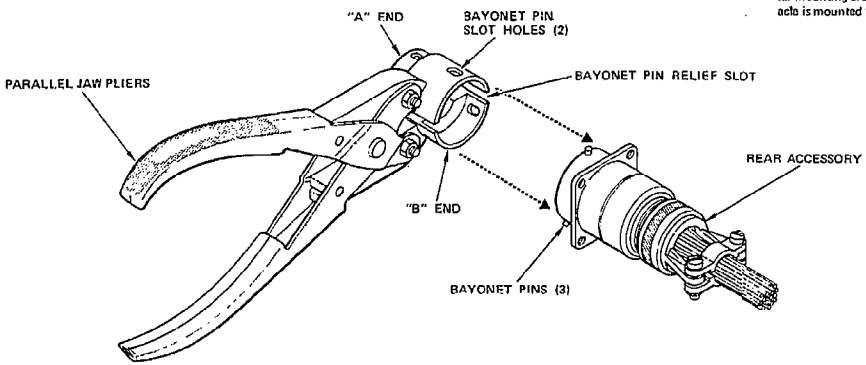

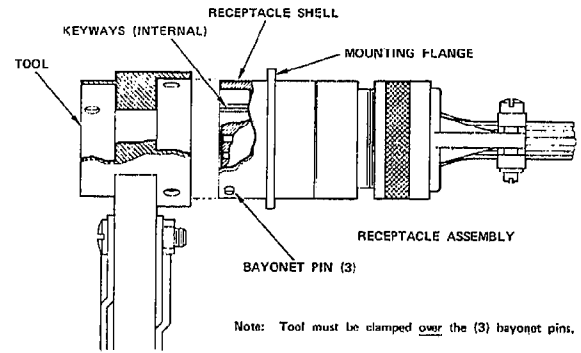

Note: Tool must be clamped over the (3) bayonet pins.

3A

3B

INSTRUCTIONS FOR USE OF :

1-1/4" AND 2-1/2" STRAP WRENCH

1. Select applicable strap wrench
2. Loop strap loosely around wire bundle.
3. Thread end of strap through slot in wrench shaft.

   Note: Leave sufficient strap material to encircle part to be loosened or tightened.

4. Engage applicable drive handle (tee or straight) in drive socket of wrench shaft.
5. Slide assembled strap wrench along wire bundle until strap encircles connector or accessory.
6. Rotate strap wrench slowly counter-clockwise (right-hand locking) to take up any excess slack in strap.
7. Continue rotating strap wrench counter-clockwise until plug is free from receptacle.
8. A slight turn clockwise will release strap wrench from plug.
9. To tighten connector coupling ring or accessory, reverse steps 6 thru 8.

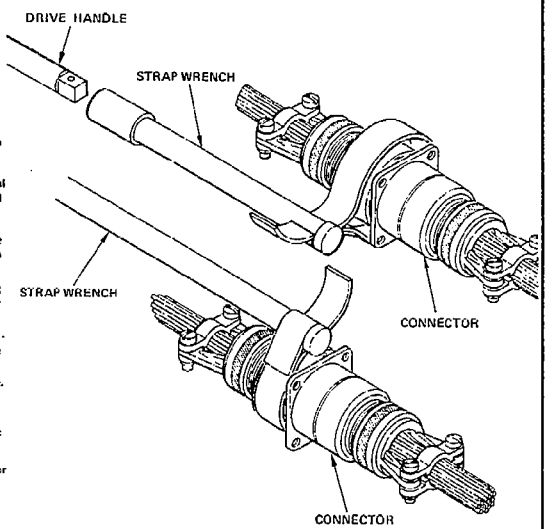

INSTRUCTIONS FOR USE OF :

MINI-STRAP WRENCH

1. Loop strap around part.

   Note: Make certain angled face of wrench is facing in same direction as the force to be applied to the handle.

2. Thread strap through slot in wrench.
3. Pull strap through slot in wrench until nose of wrench is close to or in contact with part to be tightened.
4. With strap folded under nose of wrench, apply tightening force.
5. Rotating strap handle in opposite direction to which force was applied will release strap wrench.

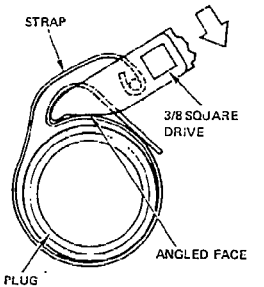

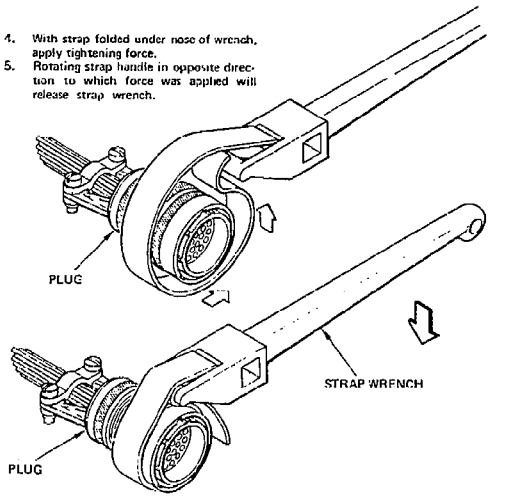

INSTRUCTIONS FOR USE OF :

TORQUE WRENCH

Note: Torque wrench is for use in conjunction with any of the strap wrenches.

1. Insert drive of torque wrench into drive socket of strap wrench.
2. Tighten until desired torque value is obtained.
3. Use drive adapter when using 1-1/4" and 2-1/2" strap wrenches.

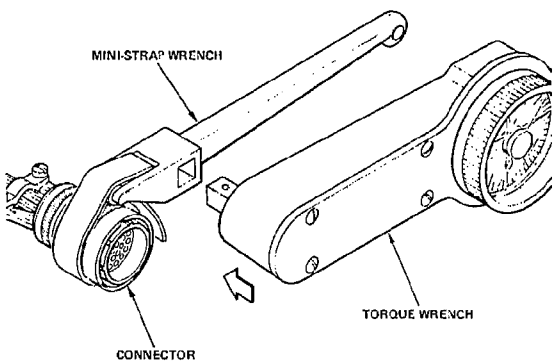

INSTRUCTIONS FOR USE OF :

PLASTIC TIE DOWN STRAP INSTALLATION TOOL

MS 90387-1

FOR USE ON PLASTIC CABLE TIE:
MS 3367-1, -2, -4, -5
MS 3368-1, -2, -3, -4, -5

- Initial tension adjustment is made as shown in the illustration. If different width cable ties are to be installed, tension adjustment should be made for the smaller tie first with the quick adjustment knob rotated counter-clockwise to the "loose" position.
- If, for example, the setting was made for the MS 3367-4 tie, (.100 inches wide) clockwise rotation of the knob to the "tight" position should produce satisfactory installation with the MS 3367-1 tie, (.190 inches wide).
- Place self-clinching tie around the wire bundle per instructions. Load the tool from the side placing the cable tie in the nose of the tool. Keep tool close to head of tie. Squeeze handle of tool until tail of strap is cut off. Loose bundles may require repeated trigger action.

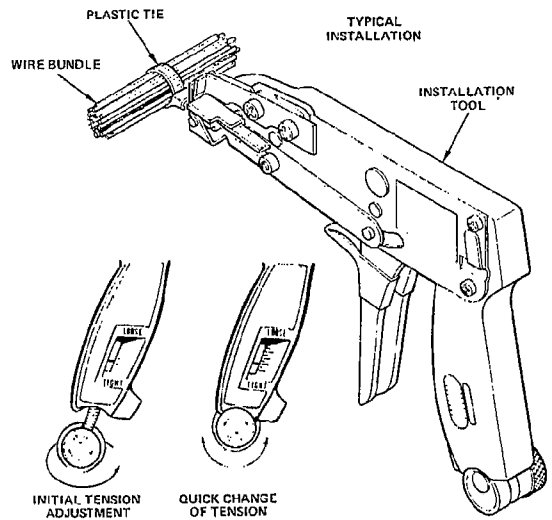

4A

4B

PARTS LIST - KIT NO. - M83507/15-01

PART NUMBER	FEDERAL STOCK NUMBER	DESCRIPTION
G 79000		TOOL CASE WITH (2) FLY LEAFS
G 79001		PLASTIC INSTRUCTION SHEETS
G 79005		HANDLE - STRAIGHT
G 79006		TEE HANDLE
TG 73		1-1/4" MAXIMUM DIAMETER STRAP WRENCH
TG 74		2-1/2" MAXIMUM DIAMETER STRAP WRENCH
G 79008		DRIVE ADAPTER, 3/8" TO 1/4"
G 79007		14" EXTENSION SHAFT
TG 70		3" MINI-STRAP WRENCH
TG 69-P		SOFT JAW PLIERS
G 79010		MARKING PENCIL
TG 76-1		PARALLEL JAW PLIERS
TG 76-2		PARALLEL JAW PLIERS
TG 76-3		PARALLEL JAW PLIERS
TG 76-4		PARALLEL JAW PLIERS
TG 76-5		PARALLEL JAW PLIERS
TG 76-6		PARALLEL JAW PLIERS
GTSQ 150		TORQUE WRENCH (0-150 in.-lb.)
MS 90387		TOOL, HAND, ADJUSTABLE FOR PLASTIC TIE DOWN STRAPS
TG 72		COMPLETE KIT

CAUTION

SOFT JAW PLIERS SHALL NOT BE USED FOR TIGHTENING REAR ACCESSORIES WITH CAPTIVATED OR LOOSE COUPLING NUT. USE TG 70 STRAP WRENCH.

NOTES:

For connectors listed in Part II, Tool Table Number, MIL-C-26500
MIL-C-38999
MIL-C-81703
MIL-C-83723

shell size designator follows the class letter in the military part number.

Example: MS24266R18T31P6
MS27473T22B55
MS3147E1950SY
MS83723-07R2255N

For connectors listed in Tool Table "Bendix LJT" the actual shell size does not appear in the part number. Refer to Part II Column 3.

For connectors listed in Tool Table "Bendix SJT" shell size is designated as follows:
91-496296-1835S.

For connectors listed in Tool Table "Deutsch DS" shell size is designated as follows:
DS07-6121.

For connectors listed in Tool Table "Amphenol" shell size is designated as follows:
480-16E20-39P.

ADDITIONAL NOTES

The following space is provided for the user. A marking pencil is included. Any pertinent information should be recorded. Any suggestions as to tool content, instruction format, etc. should be forwarded to:

Headquarters, AFLC/LOIEP
Wright Patterson Air Force Base
Dayton, Ohio 45433

NOTES ON TOOL SELECTION CHART

The following pages provide a cross-reference between connectors and tools required to service them. The chart is intended as a guide, and some special connectors may not be covered.

The Tool Selection Chart is divided into two parts. Part I provides cross-reference between connector part numbers and tool table numbers: Part II provides a cross-reference between Tool Table Number, Connector Part Number and Shell Size and Tool Size.

Part I For selection of the correct tool table number proceed as follows:

1. Determine connector part number.
2. In column 1, find the applicable connector part number.
3. Column 2 references Military or Supplier Specification.
4. Reading across the columns, column 3 indicates the correct Tool Table Number to be used.
5. Turn to Part II, Tool Table Numbers.

Part II For selection of the correct tool size, proceed as follows:

1. Find the required Tool Table Number in Column 1.
2. In column 2, find the applicable connector part number (connector part numbers are listed in alpha-numeric sequence).
3. To determine shell size from connector part number, see notes for example.
4. Find shell size in column 3.
5. Column 4 indicates the tool size and A or B socket end to be used.

PART I

CONNECTOR PART NO. [1]	CONNECTOR SPECIFICATION REFERENCE [2]	TOOL TABLE NO. [3]
MS3147 MS3148 MS3445	MILC-81703	1
MS24266	MILC-26500	2
MS27467 MS27498 MS27473 MS27480 MS0027484 MS0027500	MILC 38999	3
M83723-07 M83723-08 M83723-13 M83723-14 M83723-17 M83723-18 M83723-23 M83723-24 M83723-36 M83723-37 M83723-42 M83723-43 M83723-48 M83723-49 M83723 75 M83723-76 M83723-77 M83723-78 M83723 86 M83723 87	MILC-83723	4

CONNECTOR PART NO. [1]	CONNECTOR SPECIFICATION REFERENCE [2]	TOOL TABLE NO. [3]
87-488700 87-488701 87-488704 87 488705 87 488706 87 488710 87 488711 87-488712 87-488713 87 488714 87 488718 87 488719 87 488720 87 488721 87 488727 87 488728 87 488729 87-488730 87 488737 87-488738 87-488739 87-488740 87-488747 87-488748 87-488749 87 488750 87-488757 87 488758 87-488759 87-488766 87-488767 87-488768 87-488769 87-488770	Bendix LJT	5

CONNECTOR PART NO. [1]	CONNECTOR SPECIFICATION REFERENCE [2]	TOOL TABLE NO. [3]
91-496296-1835S	Bendix 'SJT'	6
91-539700 91-539701 91-539704 91-539705 91 539706 91 539710 91 539711 91 539712 91 539713 91 539714 91 539718 91 539719 91 539720 91 539721 91 739727 91 539728 91 539729 91 539730 91 539737 91 539738 91 539739 91 539740 91 539747 91 539748 91 539749 91 539750 91 539757 91 539758 91 539759 91 539766 91 539767	Bendix LJT	7

CONNECTOR PART NO. [1]	CONNECTOR SPECIFICATION REFERENCE [2]	TOOL TABLE NO. [3]
91 539768 91 539769 91 539770	Bendix LJT	7
91 540446 91 540447 91 540448 91 540449 91 540450 91 540451 91 540452 91 540453 91 540454	Bendix JT	8
DSC7 3719** 1 DSC7 3719** 5 DSC7 3719** 15 DSC7 3719** 16 DS07 6*21** 1 DS07 6*21** 5 DS07 6*21** 15 DS07 6121** 18	Deutsch DS	9
480 16E20 39P	Amphenol	10
LJT*SQ06RT2* -79	Bendix LJT	11

5A

PART II

1 TOOL TABLE NUMBER	2 CONNECTOR PART NO.	3 SHELL SIZE	4 TOOL SIZE
MILC 81703 ①	MS3147 MS3148 MS3445	3 7 12 19 27 37	
MILC 26500 ②	MS24266 MS27615	8 10 12 14 16 18 20 22 24	1A 2A 2B 3A 3B 4A 4B 5A 5B
MILC 38999 Series I ③	MS27467 MS27498 MS27653	9 11 13 15 17 19 21 23 25	2A 1B 3A 3B 4A 4B 5A 5B 6A

1 TOOL TABLE NUMBER	2 CONNECTOR PART NO.	3 SHELL SIZE	4 TOOL SIZE
MILC-38999 Series II ③	MS27473 MS27480 MS27484 MS27500	8 10 12 14 16 18 20 22 24	1A 2A 2B 3A 3B 4A 4B 5A 5B
MILC-83723 Series II ④	M83723-23 M83723-24	8 10 12 14 16 18 20 22 24	2A 1B 3A 3B 4A 4B 5A 5B 6A

1 TOOL TABLE NUMBER	2 CONNECTOR PART NO.	3 SHELL SIZE	4 TOOL SIZE
MILC-83723 Series I, III ④	M83723 13 M83723-14 M83723-36 M83723-37 M83723-42 M83723-43 M83723-48 M83723 49 M83723-75 M83723 76 M83723-77 M83723-78 M83723 86 M83723 87	8 10 12 14 16 18 20 22 24	1A 2A 2B 3A 3B 4A 4B 5A 5B
Bendix LJT 38999 Series I Type ⑤	87-488700 87-488701 87-488704 87 488705 87-488706 87-488710 87-488711 87-488712 87-488713 87-488714 87-488718 87-488719 87-488720 87-488721 87-488727	9 9 11 11 11 13 13 13 13 13 15 15 15 15 17	2A 2A 1B 1B 1B 3A 3A 3A 3A 3A 3B 3B 3B 3B 4A

1 TOOL TABLE NUMBER	2 CONNECTOR PART NO.	3 SHELL SIZE	4 TOOL SIZE
Bendix LJT 38999 Series I Type ⑤	87-488728 87-488729 87-488730 87-488737 87-488738 87-488739 87-488740 87-488747 87-488748 87-488749 87-488750 87-488757 87-488758 87-488759 87-488766 87-488767 87-488768 87-488769 87-488770	17 17 17 19 19 19 19 21 21 21 21 23 23 23 25 25 25 25 25	4A 4A 4A 4B 4B 4B 4B 5A 5A 5A 5A 5B 5B 5B 6A 6A 6A 6A 6A
Bendix SJT ⑥	91 496296 1835S	18	4A
Bendix LJT 38999 Series I Type ⑦	91-539700 91-539701 91-539704 91 539705 91-539706	9 9 11 11 11	2A 2A 1B 1B 1B

1 TOOL TABLE NUMBER	2 CONNECTOR PART NO.	3 SHELL SIZE	4 TOOL SIZE
Bendix LJT 38999 Series I Type ⑦	91-539710 91 539711 91-539712 91-539713 91-539714 91-539718 91-539719 91-539720 91-539721 91-539727 91-539728 91-539729 91-539730 91-539737 91-539738 91-539739 91-539740 91-539747 91-539748 91-539749 91-539750 91-539757 91-539758 91-539759 91-539766 91-539767 91 539768 91-539769 91-539770	13 13 13 13 13 15 15 15 15 17 17 17 17 19 19 19 19 21 21 21 21 23 23 23 25 25 25 25 25	3A 3A 3A 3A 3A 3B 3B 3B 3B 4A 4A 4A 4A 4B 4B 4B 4B 5A 5A 5A 5A 5B 5B 5B 6A 6A 6A 6A 6A

1 TOOL TABLE NUMBER	2 CONNECTOR PART NO	3 SHELL SIZE	4 TOOL SIZE
Bendix JT 38999 Series II Type ⑧	91 540446 91 540447 91 540448 91-540449 91 540450 91 540451 91 540452 91 540453 91 540454	8 10 12 14 16 18 20 22 24	1A 2A 2B 3A 3B 4A 4B 5A 5B
Deutsch DS ⑨	DS07 37'9** 1 DS07 37'9** 5 DS07 37'9** 15 DS07 37'9** 16 DS07 6121** 1 DS07 6121** 5 DS07 6121** 15 DS07 6121** 16	37 37 37 37 61 61 61 61	
Amphenol ⑩	480 16E20 39P	20	4B
⑪	LJTPS Q06RT 2179	21	5A

REQUIREMENTS:

Design and configuration: See figures 1 through 5.

Materials:
Case (Category 2): Fiberglass with an aluminum frame (Skydyne part no. SK99340 or approved equivalent); color is olive drab in accordance with FED-STD-595.
Cover and components: Aluminum alloy, clear anodized in accordance with MIL-A-8625.
Instruction sheets and contents charts: White vinyl 0.020 inch (0.51 mm) thick.
Insert and retainer pad: Fire retardant foamed polyethylene in accordance with PPP-C-1752.

Clasps, handles, hinges, and locking hasp: Suitably plated to resist corrosion.

Nameplate: In accordance with MIL-P-19834.

Cover: A retainer pad shall be permanently affixed to the underside and a latching mechanism shall be provided so that when the cover is closed the tools will be captivated in their respective positions.

Manual air pressure relief valve: Located adjacent to handle. Decal with "OPEN BEFORE AIRFLIGHT", "CLOSE AFTER AIRFLIGHT" shall be attached to case adjacent to valve.

Rubber feet: Provided on the back and bottom of the case (see figure 1).

Instruction sheets and contents charts (see pages 7 through 18): Lettering shall be legible and protected with a transparent coating. Contents charts (centered on inside of top and bottom of tool case cover) shall have pressure sensitive backing and show the insert cavity configurations and the respective tool part numbers; a list of NSN's will also be supplied.

Part number:
M83507/15-01 - Tool kit, general purpose, backshell hardware tools.
M83507/15-02 - Tool case assembly.

QUALIFICATION:

Qualifying activity - Defense Electronics Supply Center, (DESC-E), Dayton, OH 45444.

Custodians:
Army - EL
Navy - AS
Air Force - 85

Preparing activity:
Air Force - 85

(Project 5180-0106)

Review activities:
Army - MI, AR, AV, WC, GL
Navy - EC, OS, SH
Air Force - 11, 17, 99
DLA - ES

User activities:
Army - ME, AT
Navy - MC, YD
Air Force - 19