MILITARY SPECIFICATION SHEET

TOOL KITS, ELECTRICAL CONNECTORS, CONTACTS, AND CONNECTOR AND CABLE ACCESSORIES: TOOL KIT FOR MIL-C-22520/1 CRIMPING TOOL AND TURRETS

This specification is approved for use by Naval Air Systems Command, Department of the Navy, and is available for use by all Departments and Agencies of the Department of Defense.

The complete requirements for procuring the tool kit described herein shall consist of this document and the latest issue of Specification MIL-T-83507.

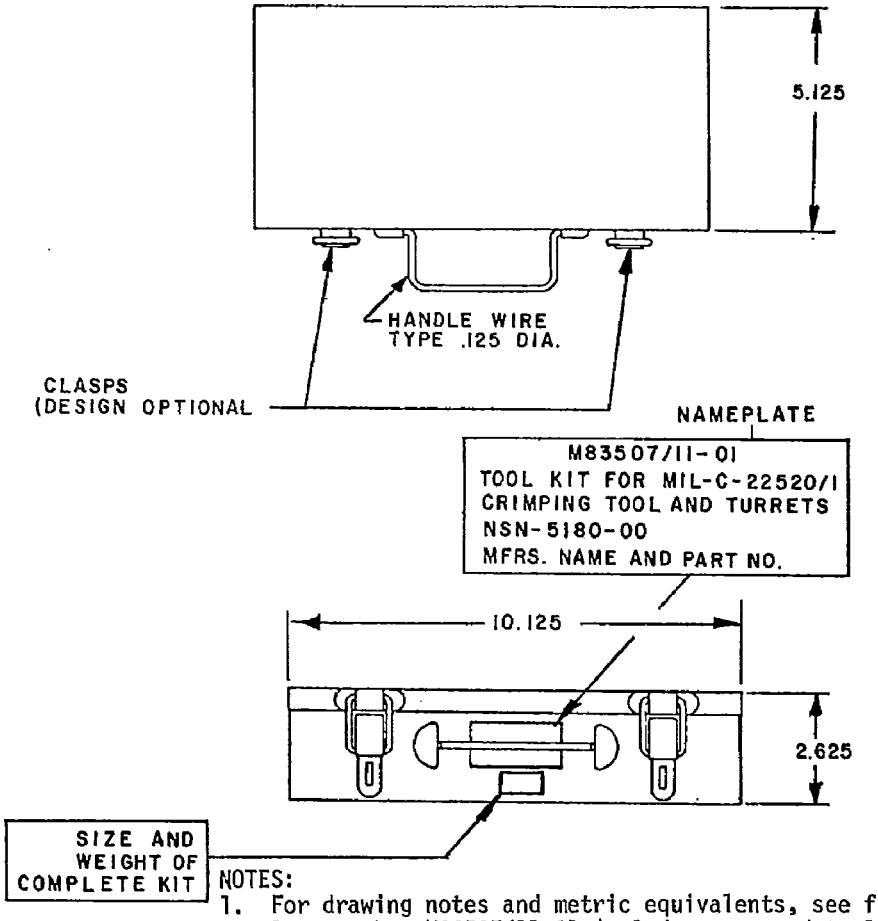

NOTES:
1. For drawing notes and metric equivalents, see figure 5.
2. Part number M83507/11-01 includes case and tools.

FIGURE 1. Tool kit for MIL-C-22520/1 crimping tool and turrets.

FSC 5180

Parts List:
(1) M83507/11-02 - Tool case assembly.
(1) M22520/1-01 - Crimp tool frame.
(1) M22520/1-02 - Turret head assembly.
(1) M22520/1-03 - Turret head assembly.
(1) M22520/3-1 - In-service inspection gage.
(1) 9/64 hex wrench.
(1 set) - Contents chart, instruction sheets and tool selection chart.

FIGURE 1. Tool kit for MIL-C-22520/1 crimping tool and turrets - Continued.

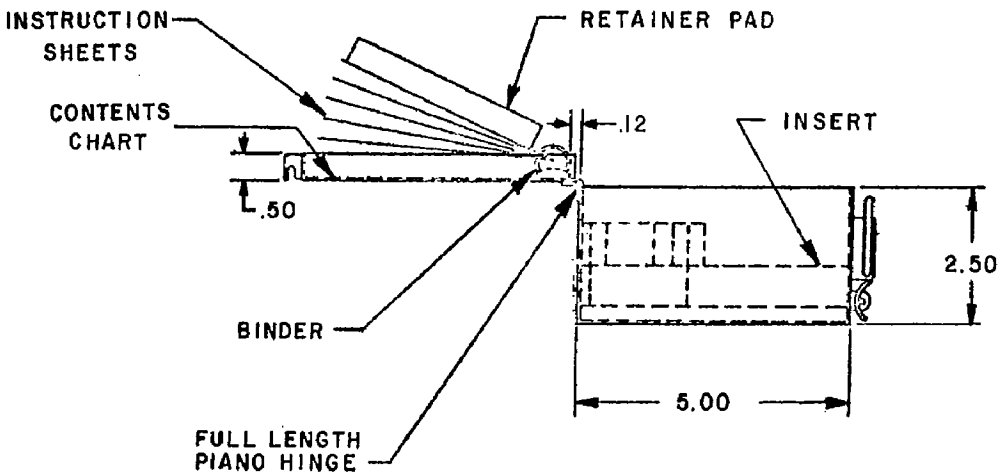

NOTES:
1. See figure 5, note 4.
2. Part number M83507/11-02 for case only (tools not included).

FIGURE 2. Tool case assembly.

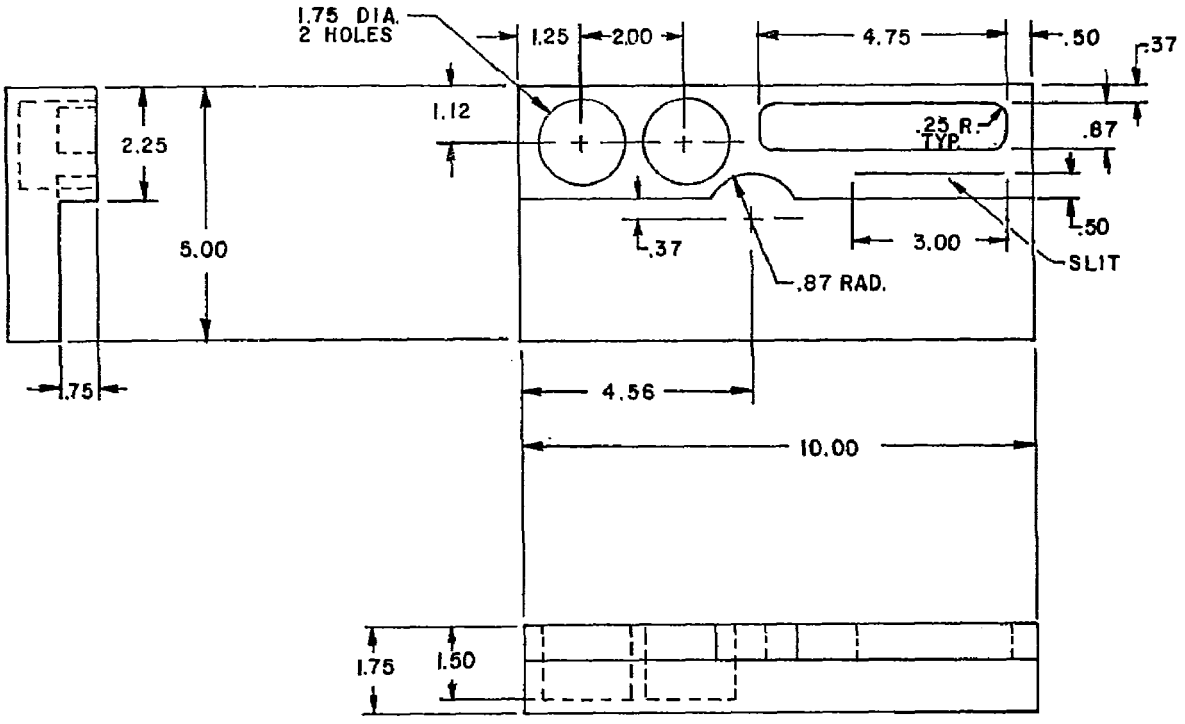

NOTES:
1. For drawing notes and metric equivalents, see figure 5.
2. This insert is part of the tool case assembly (see figure 2).

FIGURE 3. Insert.

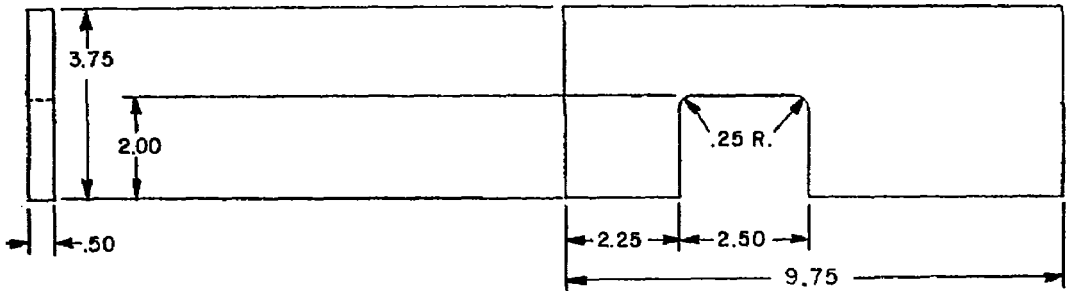

NOTES:
1. For drawing notes and metric equivalents, see figure 5.
2. This retainer is part of the tool case assembly (see figure 2).

FIGURE 4. Retainer.

INCHES	MM	INCHES	MM	INCHES	MM	INCHES	MM
.12	3.0	.87	22.1	2.25	57.2	4.75	120.6
.125	3.18	1.12	28.4	2.50	63.5	5.00	127.0
.25	6.4	1.25	31.8	2.625	66.68	5.125	130.18
.37	9.4	1.50	38.1	3.00	76.2	9.75	247.6
.50	12.7	1.75	44.4	3.75	95.2	10.00	254.0
.75	19.0	2.00	50.8	4.56	115.8	10.125	257.18

NOTES:
1. Dimensions are in inches.
2. Metric equivalents are given for general information only and are based upon 1.00 inch = 25.4 mm.
3. Unless otherwise specified, tolerances are ±.031 (.79 mm).
4. Remove all burrs, break sharp edges and corners.

FIGURE 5. Drawing notes and metric equivalents.

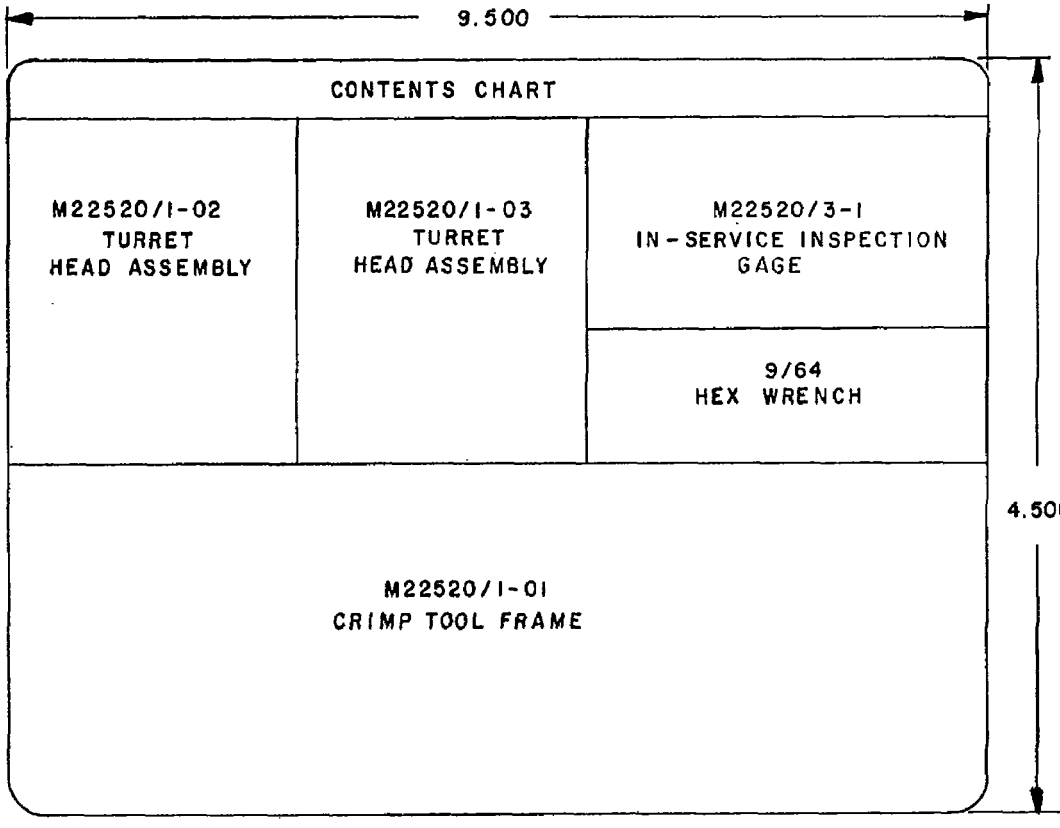

INSTRUCTION SHEETS ARE AS FOLLOWS:

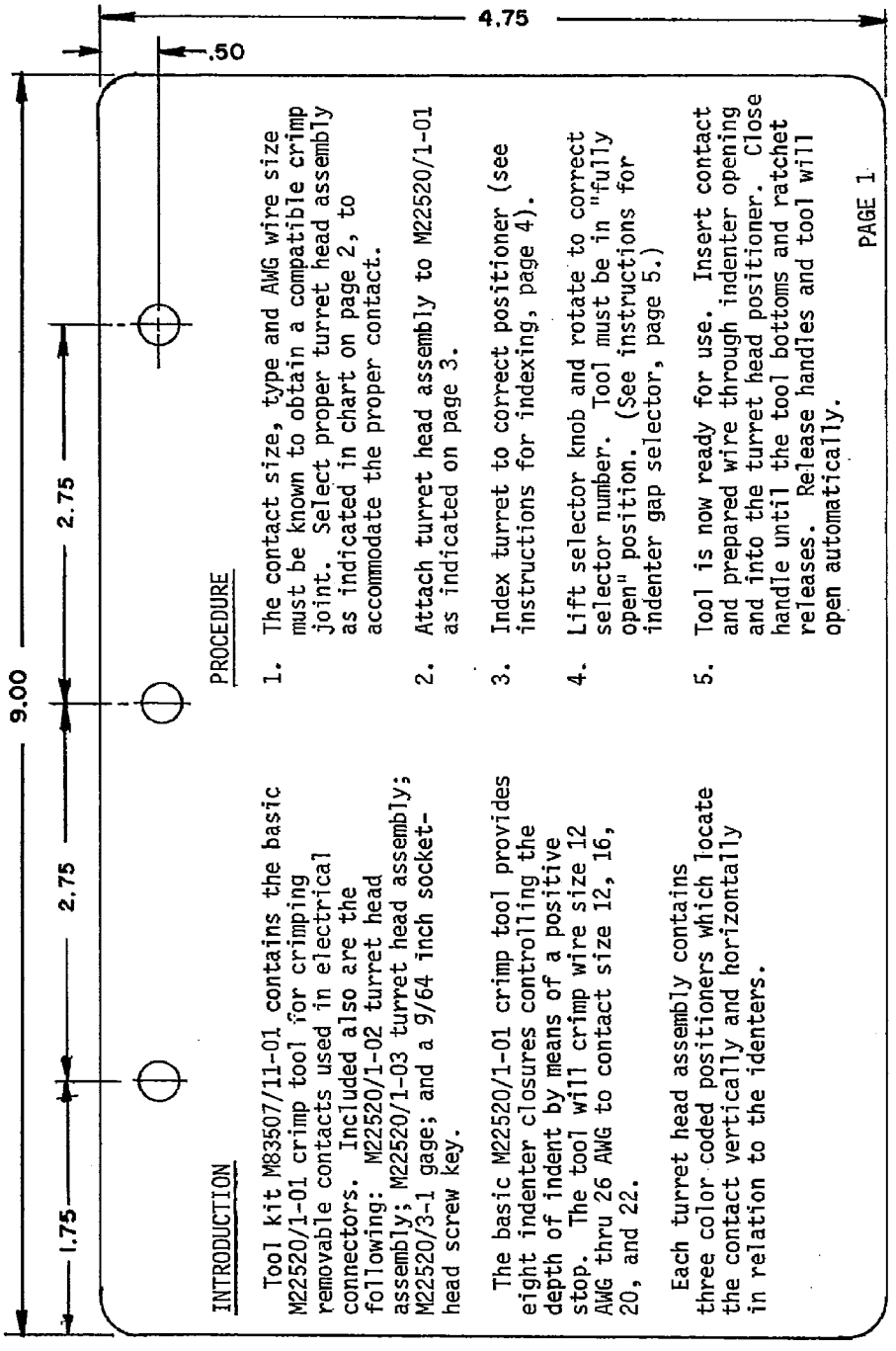

INTRODUCTION

Tool kit M83507/11-01 contains the basic M22520/1-01 crimp tool for crimping removable contacts used in electrical connectors. Included also are the following: M22520/1-02 turret head assembly; M22520/1-03 turret head assembly; M22520/3-1 gage; and a 9/64 inch socket-head screw key.

The basic M22520/1-01 crimp tool provides eight indenter closures controlling the depth of indent by means of a positive stop. The tool will crimp wire size 12 AWG thru 26 AWG to contact size 12, 16, 20, and 22.

Each turret head assembly contains three color coded positioners which locate the contact vertically and horizontally in relation to the identers.

PROCEDURE

1. The contact size, type and AWG wire size must be known to obtain a compatible crimp joint. Select proper turret head assembly as indicated in chart on page 2, to accommodate the proper contact.

2. Attach turret head assembly to M22520/1-01 as indicated on page 3.

3. Index turret to correct positioner (see instructions for indexing, page 4).

4. Lift selector knob and rotate to correct selector number. Tool must be in "fully open" position. (See instructions for indenter gap selector, page 5.)

5. Tool is now ready for use. Insert contact and prepared wire through indenter opening and into the turret head positioner. Close handle until the tool bottoms and ratchet releases. Release handles and tool will open automatically.

PAGE 1

TURRET HEAD PART NO.	CONTACTS ACCOMODATED	POSITIONER COLOR	CONTACT SIZE	26	24	22	20	18	16	14	12	WIRE SIZE
M22520/1-02	MS3162, MS3163 MS3192, MS3193 MS18134, MS18136 MS90453, MS90454 MS39029/1, /2, /3, /4, /5, /9, /10, /11, /12 M83723/29, /30, /33, /34 MS24254, MS24255	RED	20-20	1	2	3	4					SEL. NO.
		BLUE	16-22 16-20 16-16	4 1	5 2	6 3	 4 4	 5	 6			
		YELLOW	12-16 12-12				4	5	6	7	8	
M22520/1-03	MS17803, MS17804	RED	20-20 16-20		4 4	5 5	6 6					SEL. NO.
	MS17807, MS17808	BLUE	16-16				6	7	7			
	OS12814 BASIC TYPE P & M	BLACK	22	2	3	4						
			16				4	5	6			
	M21097/9-01	GREEN	20	1	2	3	4					

PAGE 2

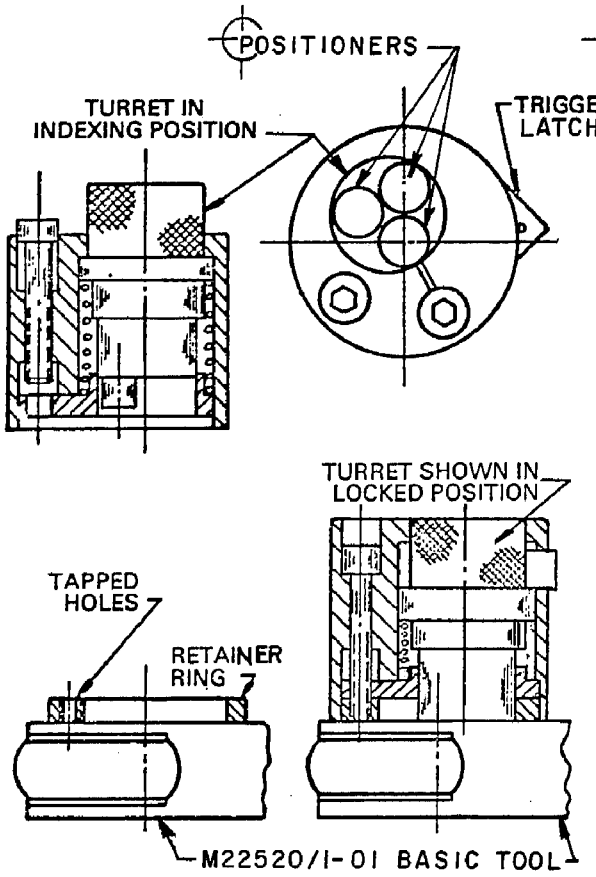

INSTRUCTIONS FOR CHANGING TURRET HEAD ASSEMBLY

1. Press turret latch which releases turret to indexing position.
2. Place selected turret head assembly onto retainer ring with screws lined up with tapped holes.
3. After turret head assembly is seated against retainer ring, tighten socket head screws with 9/64 inch socket head screw key. Turret should index easily without binding.
4. To remove, loosen socket head screws until threads are disengaged from retainer ring and remove with a straight lifting motion.

PAGE 3

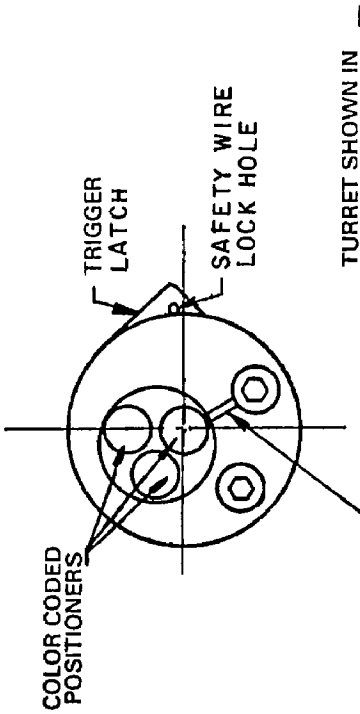

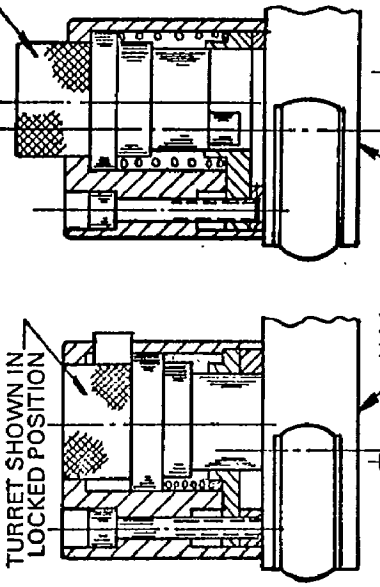

INSTRUCTIONS FOR INDEXING TURRET

1. Refer to data plate on turret head. Below color code and opposite contact size is listed the positioner color.
2. Tool must be in open position.
3. Press turret latch which releases turret to indexing position. Rotate turret until color coded positioner is in line with index mark. Press turret until it snaps into latched position.
4. Tool is now ready for use.

PAGE 4

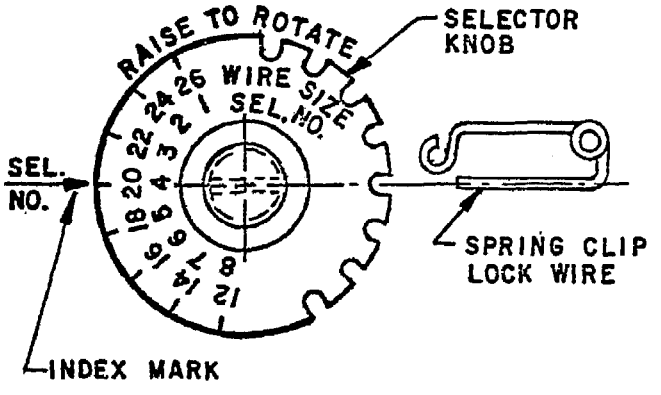

INSTRUCTIONS FOR USING SELECTOR KNOB

1. Refer to data plate on turret head assembly. Below the wire size and opposite the contact size is listed the indenter closure selector number.

2. Tool must be in open position.

3. Remove spring clip lock wire from selector knob. Raise selector knob and rotate until selector number is in line with index mark. Replace spring clip lock wire.

PAGE 5

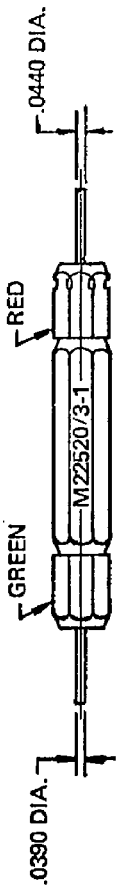

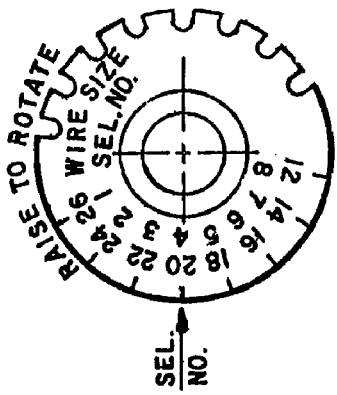

M22520/3-1 INSPECTION GAGE FOR PERIODIC IN-SERVICE INSPECTION OF M22520/1-01 BASIC TOOL

1. Raise selector knob and rotate until index mark is in line with selector number 4 (wire size number 20).

2. Follow gaging instructions as indicated on page 7.

PAGE 6

GAGING INSTRUCTIONS FOR
M22520/1-01 BASIC TOOL

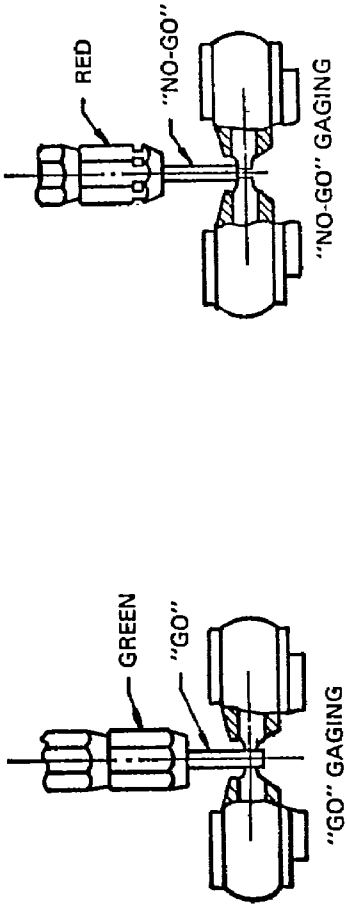

CLOSE HANDLES TO FULLY CLOSED POSITION.
INSERT "GO" GAGE AS SHOWN. GAGE MUST
PASS FREELY BETWEEN INDENTER TIPS.

CLOSE HANDLES TO FULLY CLOSED POSITION.
INSERT "NO GO" GAGE AS SHOWN. GAGE
MUST NOT ENTER BETWEEN INDENTER TIPS.
CAUTION: DO NOT CRIMP GAGE.

PAGE 7

M22520/1-01 "EYEBALL CRIMPING" INSTRUCTIONS

INTRODUCTION (GENERAL)

The M22520/1-01 basic tool may be used to satisfactorily crimp removable pin and socket contacts to AWG wire size 12 thru 26 AWG without a turret head assembly installed. In this procedure the tool operator judges by visual examination (eyeballs) and holds the contact in the proper position relative to the tool indenters. This is accomplished by selecting the correct indenter closure as shown on the tool selector plate for the desired wire size.

While a satisfactory crimp may be obtained in this manner, it should be noted that where numerous crimps are to be accomplished, a turret head assembly is recommended.

PROCEDURE

1. Remove the spring clip lock wire from the selector knob - figure I, page 9. Select wire size to be crimped and replace the safety clip lock wire to its original position.

2. Hold tool with selector plate downward, insert contact from underside of tool with wire barrel of contact facing operator. (Figure II.)

3. Align contact crimp area with tool indenters and close tool carefully until indenters lightly grip contact. Again, visually check indenter alignment for accuracy and proceed to insert wire into contact. (Figure III.)

4. Hold wire firmly to ensure that it is bottoming in contact. Close handles until tool bottoms and ratchet "kicks off". Release handle and remove crimped contact. (Figure IV.)

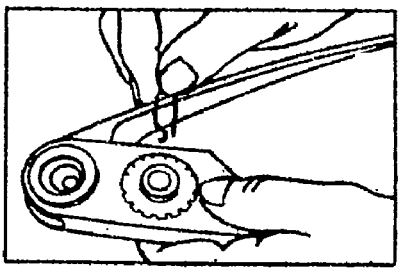

FIGURE I

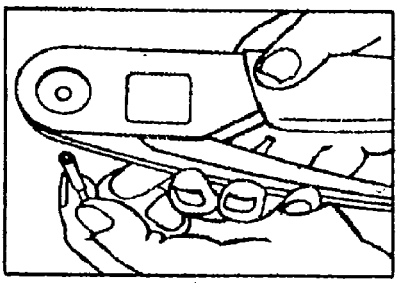

FIGURE II

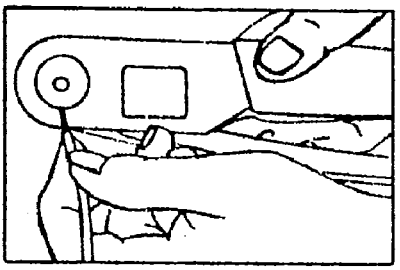

FIGURE III

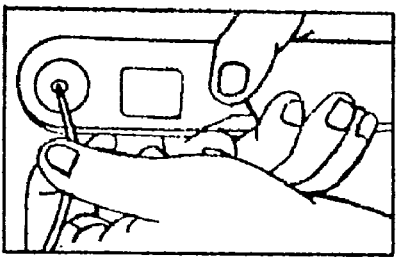

FIGURE IV

PAGE 9

REQUIREMENTS:

Design and configuration: See figures 1 through 5.

Materials:
Case and cover (category 3): Sheet metal, 21 gage in accordance with QQ-S-698; gray baked enamel on all metal parts.
Instruction sheets and contents chart: White vinyl 0.020 inch (0.51 mm) thick.
Insert and retainer pad: Fire retardant foamed polyethylene in accordance with PPP-C-1752; color is optional.

Clasps, draw pull type with provision for locking device, handles, and hinges: Suitably plated to resist corrosion.

Nameplate: In accordance with MIL-P-19834.

Binder: Looseleaf, three ring, 0.437 inch (11.10 mm) ±0.062 inch (1.57 mm) I.D., 2.75 inches (69.9 mm) center distance between rings, securely riveted to inside of cover.

Instruction sheets and contents chart (see pages 5 through 12): Lettering shall be legible and protected with a transparent coating. Contents chart (centered on inside of case cover) shall have pressure sensitive adhesive backing and show the insert cavity configurations and the respective tool part numbers; a list of NSN's will also be supplied.

Part number:
M83507/11-01 - Tool Kit for MIL-C-22520/1 crimping tool and turrets.
M83507/11-02 - Tool case assembly.

QUALIFICATION:

Qualifying activity: Naval Weapons Support Center (Code 30633), Crane, Indiana 47522.

Custodian:
Navy - AS

Review activities:
Navy - EC
DLA - ES

User activity:
Navy - MC

Preparing activity:
Navy - AS

Agent:
DLA - ES

(Project 5180-N102)