MILITARY SPECIFICATION SHEET

TOOL KITS, ELECTRICAL CONNECTORS, CONTACTS, AND CONNECTOR AND CABLE ACCESSORIES: TOOL KIT FOR ON089559, ON089560, AND ON089561 CONNECTORS

This specification is approved for use by all Departments and Agencies of the Department of Defense.

The complete requirements for procuring the tool kit described herein shall consist of this document and the latest issue of Specification MIL-T-83507.

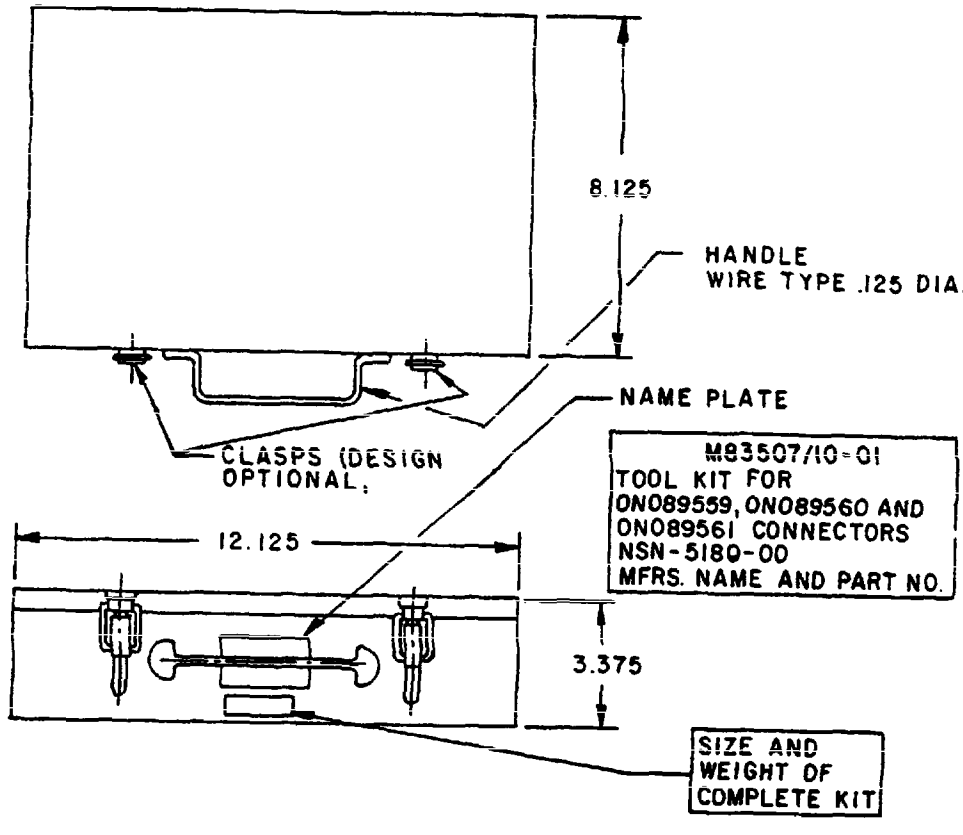

NOTES:
1. For drawing notes and metrics see figure 5.
2. Part number M83507/10-01 includes case and tools.

FIGURE 1. Tool kit for ON089559, ON089560, and ON089561 connectors.

FSC 5180

PARTS LIST:

(1)	M83507/10-02	-	Tool case assembly.
(1)	M22520/1-01	-	Crimp tool frame.
(1)	M22520/2-01	-	Crimp tool frame.
(1)	M22520/10-01	-	Crimp tool frame.
(1)	M22520/1-02	-	Turret head.
(1)	M22520/2-24	-	Positioner.
(1)	M22520/10-06	-	Die set.
(1)	M22520/3-1	-	In-service inspection gage.
(1)	9/64 hex wrench.		
(2)	ON089564	-	Installing tool.
(2)	ON089565	-	Removal tool.
(3)	M81969/14-03	-	Installing and removal tool.
(3)	M81969/14-02	-	Installing and removal tool.

(1 set) Contents charts, instruction sheets, and tool selection chart.

FIGURE 1. Tool kit for ON089559, ON089560, and ON089561 connectors - Continued.

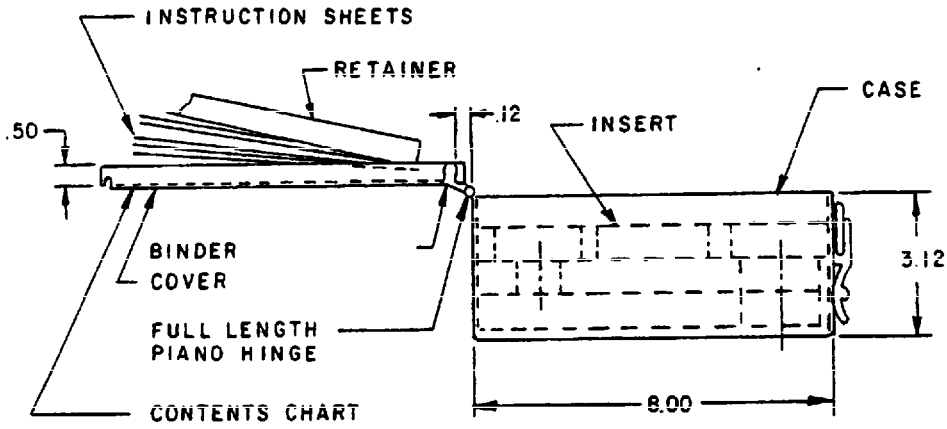

NOTES:
1. For drawing notes and metrics, see figure 5.
2. Part number M83507/10-02 for case only (tools not included).

FIGURE 2. Tool case assembly.

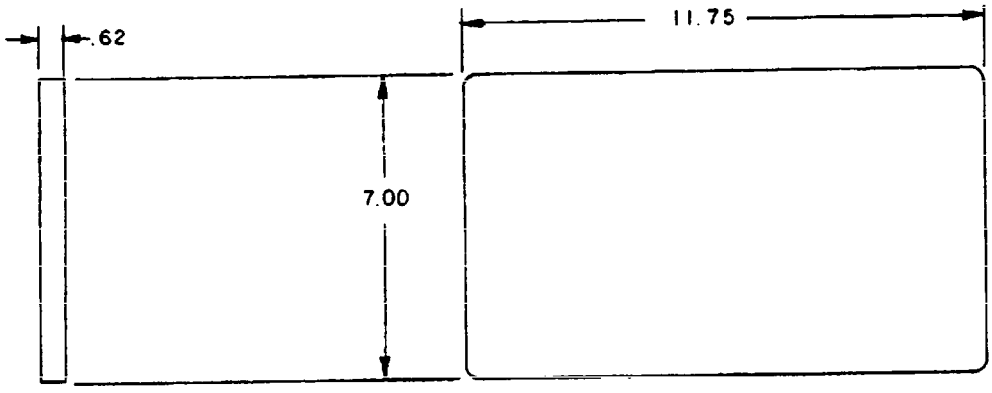

NOTES:
1. For drawing notes and metric equivalents, see figure 5.
2. This retainer is part of the tool case assembly (see figure 2).

FIGURE 3. Retainer.

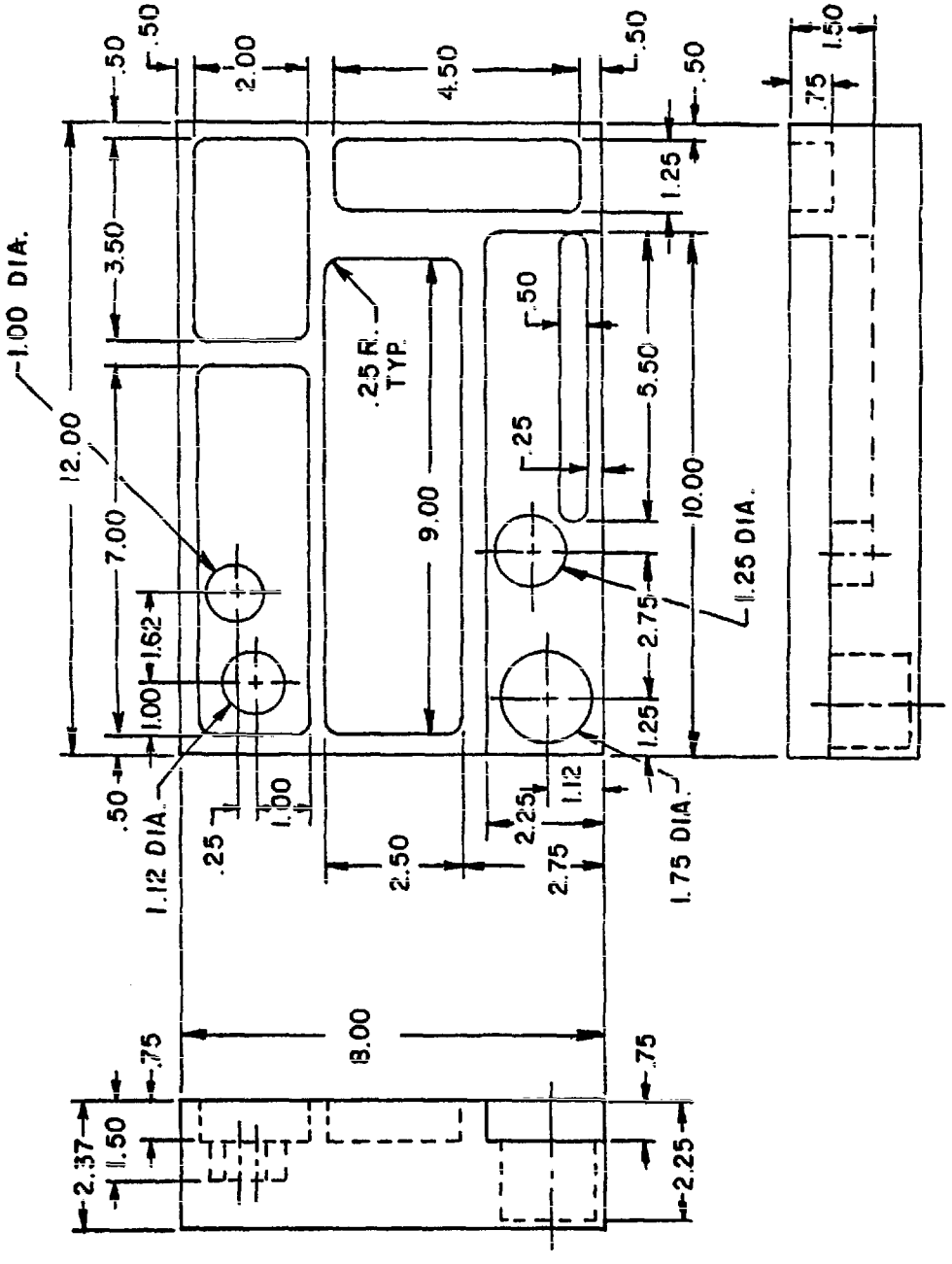

NOTE:

1. For drawing notes and metric equivalents, see figure 5.
2. This insert is part of the tool case assembly (see figure 2).

FIGURE 4. Insert.

INCHES	MM	INCHES	MM	INCHES	MM	INCHES	MM
.12	3.0	1.25	31.8	2.50	63.5	7.00	177.8
.125	3.18	1.50	38.1	2.75	69.8	8.00	203.2
.25	6.4	1.62	41.1	3.12	79.2	8.125	206.38
.50	12.7	1.75	44.4	3.375	85.72	9.00	228.6
.75	19.0	2.00	50.8	3.50	88.9	10.00	254.0
1.00	25.4	2.25	57.2	4.50	114.3	12.00	304.8
1.12	28.4	2.37	60.2	5.50	139.7	12.125	307.98

NOTES:
1. Dimensions are in inches.
2. Metric equivalents are given for general information only and are based upon 1.00 inch = 25.4 mm.
3. Unless otherwise specified, tolerances are ±.031 (.79 mm).
4. Remove all burrs, break sharp edges and corners.

FIGURE 5. Drawing notes and metric equivalents.

INSTRUCTION SHEETS ARE AS FOLLOWS:

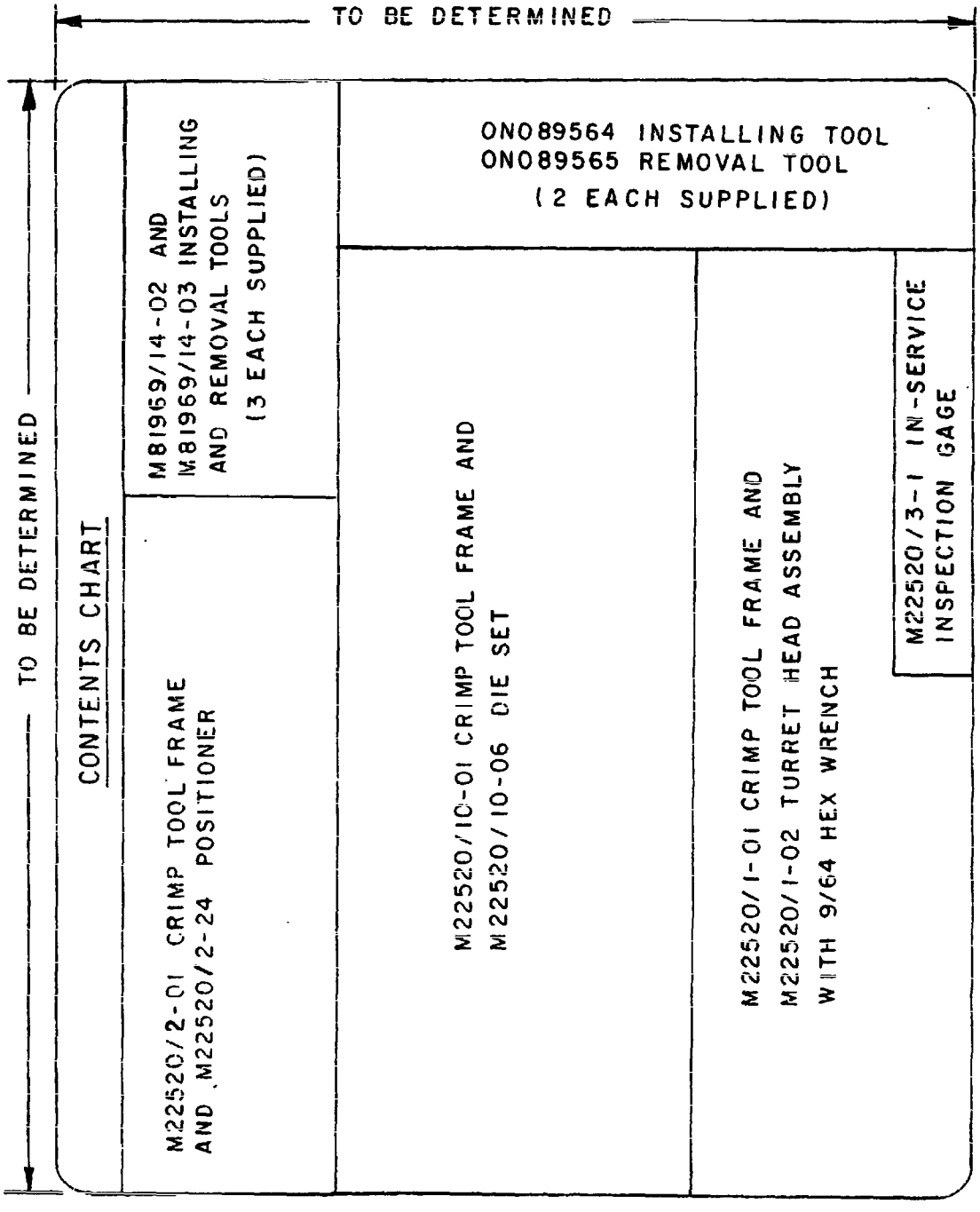

TO BE DETERMINED

TO BE DETERMINED — 2.75 — 2.75

TO BE DETERMINED

TO BE DETERMINED

INTRODUCTION

THIS KIT CONTAINS THE NECESSARY CRIMPING TOOLS, INSTALLING TOOLS, AND REMOVAL TOOLS FOR ON089559, ON089560, ON089561 AND MIL-C-83723 CONNECTORS.

THE TOOL SELECTION CHART BELOW LISTS THE TOOLS TO BE USED WITH EACH CONTACT INSTRUCTIONS FOR USING EACH TOOL IS LISTED WITH THE INDIVIDUAL TOOL DRAWING.

TOOL SELECTION CHART

CONTACT SIZE	MILITARY PART NO.	BASIC TOOL	TURRET HEAD POSITIONER OR DIE	WIRE SIZE A. W. G.	SELECTOR NO.	INSTALLING TOOL	REMOVAL TOOL
No. 20 Socket	M83723-34B20	M22520/1-01	M22520/1-02	24	2	M81969/14-02	M81969/14-02
				22	3		
No. 20 Pin	M83723-33B20			20	4		
No. 16 Socket	M83723-34B16	M22520/1-01	M22520/1-02	20	4	M81969/14-03	M81969/14-03
				16	5		
No. 16 Pin	M83723-33B16			16	6		
Coax Center Contact-Socket	———	M22520/2-01	M22520/2-24	*RG180BU	5	None	None
				26	6		
Coax Center Contact-Pin	———			24	7		
Shielded Socket Contact Assy	ON089558-2	M22520/10-01	M22520/10-06	*RG180BU	.160 Hex Across Flats	ON089564 Green	ON089565 White
Shielded Pin Contact Assy	ON089558-1						

*Supersedes RG195/U. Information is applicable when RG195/U is used.

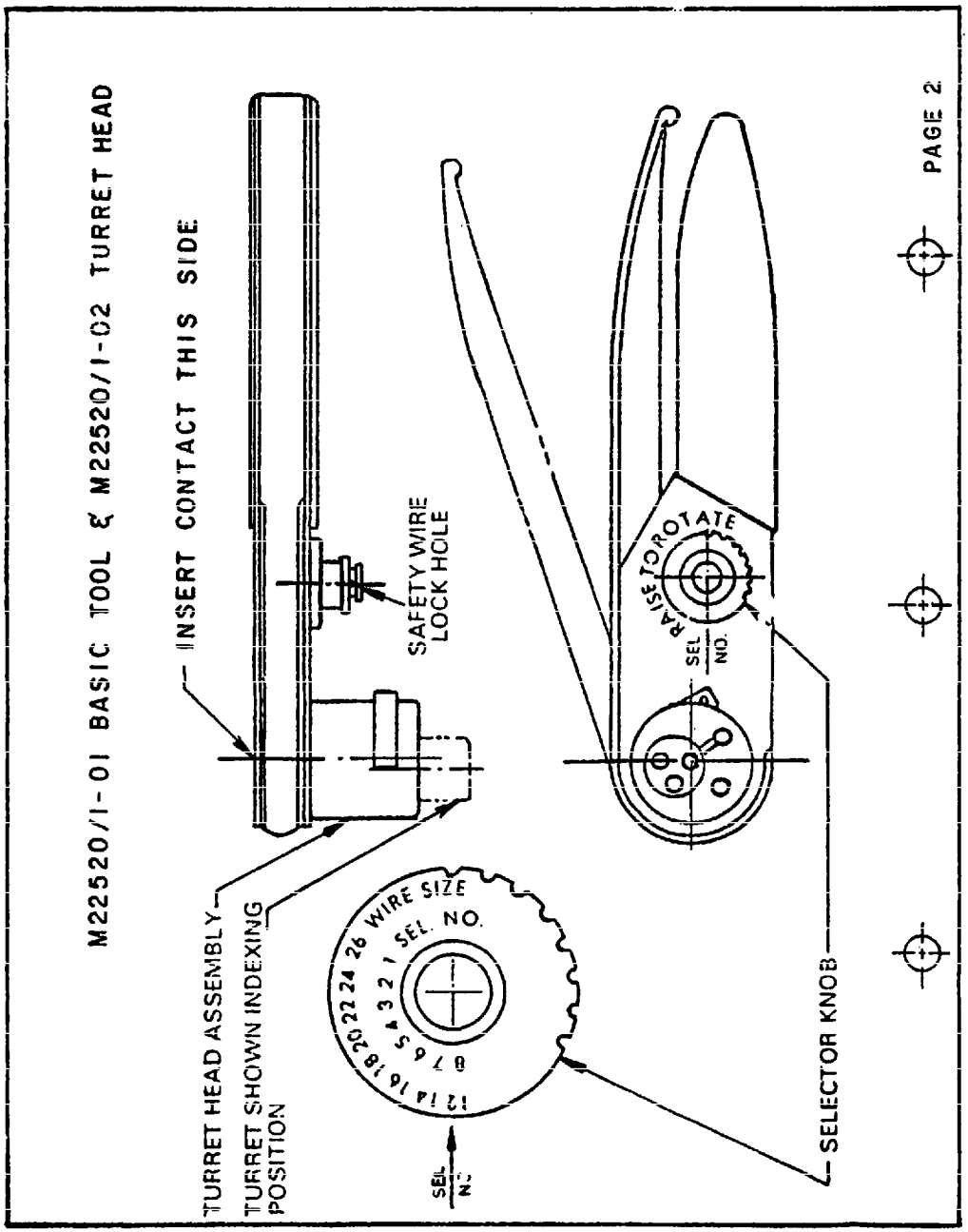
M22520/1-01 BASIC TOOL & M22520/1-02 TURRET HEAD
INSERT CONTACT THIS SIDE
SAFETY WIRE LOCK HOLE
TURRET HEAD ASSEMBLY
TURRET SHOWN INDEXING POSITION
WIRE SIZE
SEL. NO.
12 14 16 18 20 22 24 26
8 7 6 5 4 3 2 1
SEL NO.
RAISE TO ROTATE
SEL NO.
SELECTOR KNOB
PAGE 2

M22520/1-02 TURRET HEAD

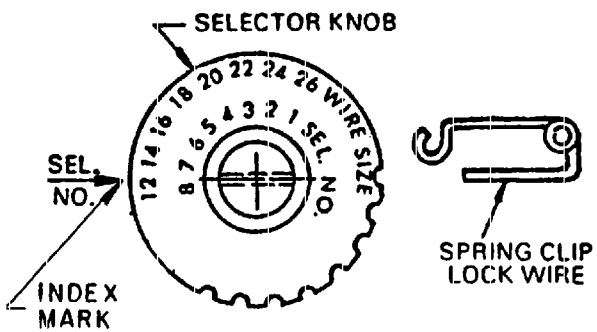

CONTACT	COLOR CODE	26	24	22	20	18	16	14	12	WIRE SIZE
-20	RED	1	2	3	4					SEL. NO.
-16	BLUE				4	5	6			
-12	GREEN							7	8	

TYPICAL DATA PLATE

INSTRUCTIONS FOR USING SELECTOR KNOB

1. Refer to data plate on turret head assembly. Below the wire size and opposite the contact size is listed the indenter closure selector number.
2. Tool must be in open position.
3. Remove spring clip lock wire from selector knob. Raise selector knob and rotate until selector number is in line with index mark. Replace spring clip lock wire.

INSTRUCTIONS FOR INDEXING TURRET

1. Refer to data plate on turret head. Below color code and opposite contact size is listed the positioner color.
2. Tool must be in open position.
3. Press turret latch which releases turret to indexing position. Rotate turret until color coded positioner is in line with index mark. Press turret until it snaps into locked position.
4. Tool is now ready for use.

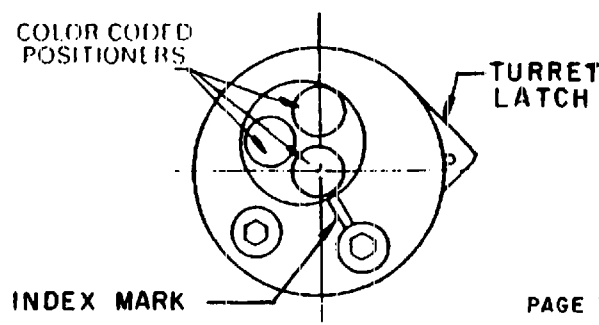

PAGE 3

M22520/2-01 BASIC TOOL & M22520/2-24 POSITIONER

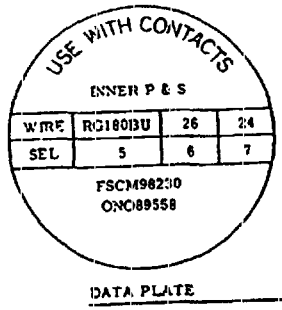

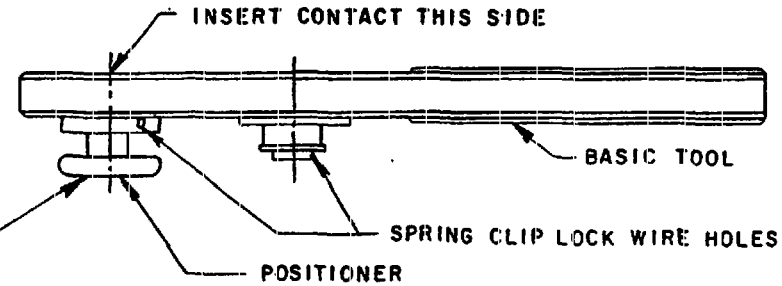

INSTRUCTIONS FOR USING
SELECTOR KNOB

1. Refer to data plate on end of positioner. Below the wire is listed the indenter closure selector number.
2. Tool must be in open position.
3. Remove spring clip lock wire. Raise selector knob and rotate until selector number is in line with index mark. Replace spring clip and tool is ready for use.

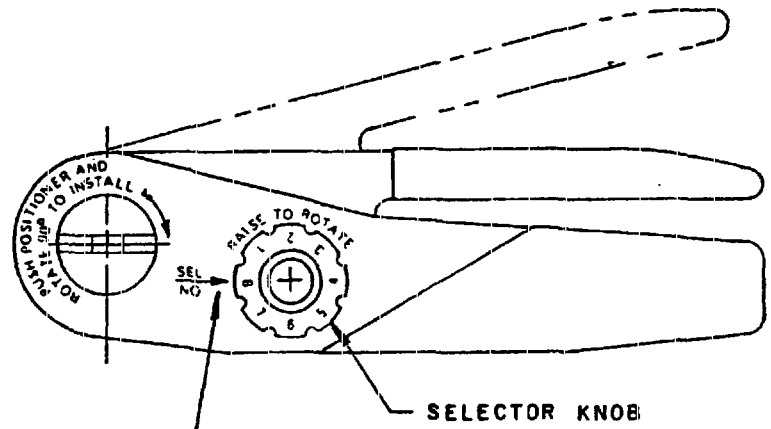

PAGE 4

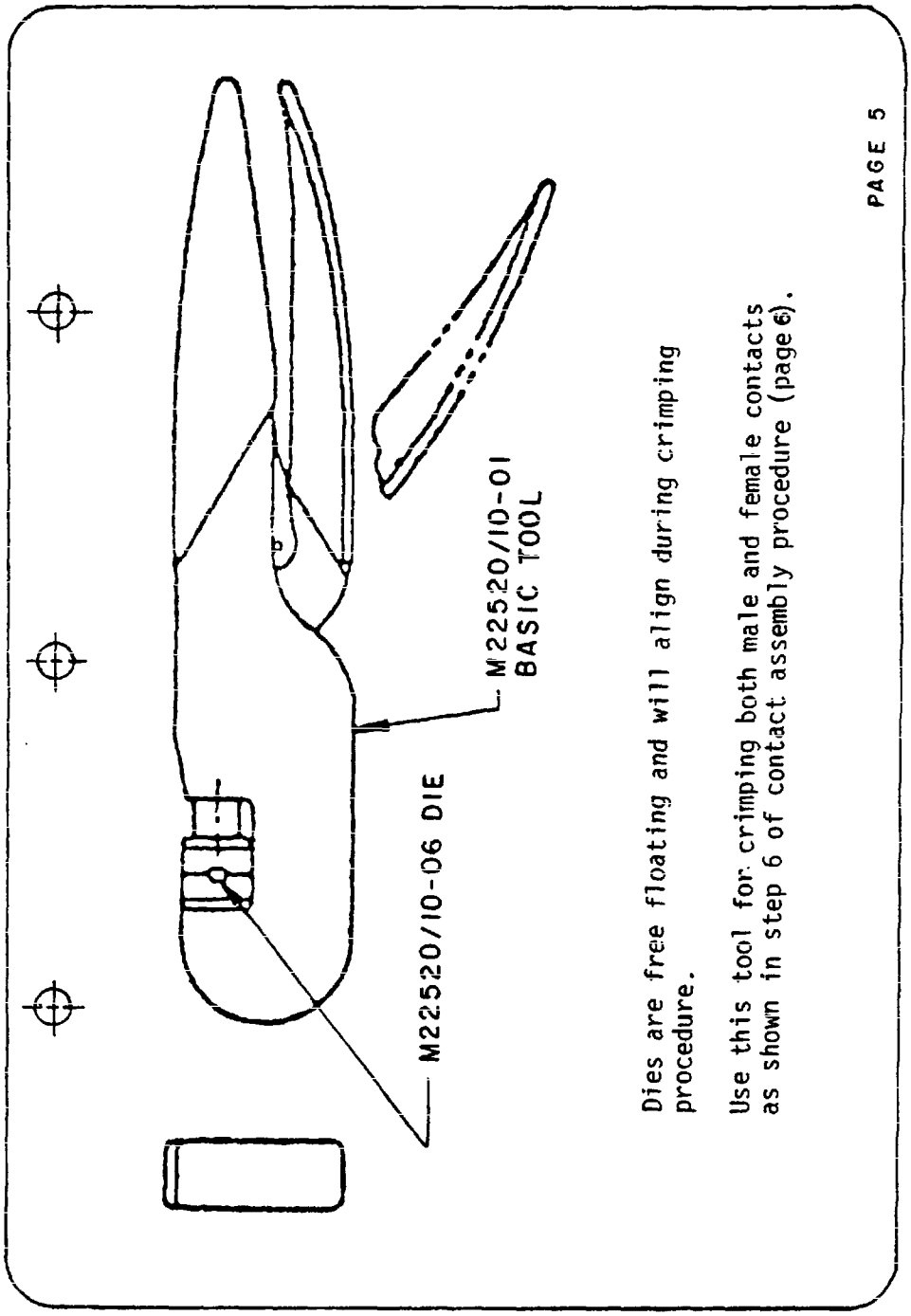

Dies are free floating and will align during crimping procedure.

Use this tool for crimping both male and female contacts as shown in step 6 of contact assembly procedure (page 6).

PAGE 5

ASSEMBLY INSTRUCTIONS FOR SHIELDED CONTACTS (COAX)

SAME FOR MALE AND FEMALE

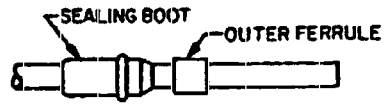

Step 1

Install sealing boot and slide outer ferrule onto cable. As shown, prior to stripping.

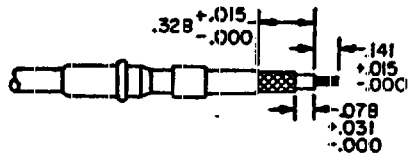

Step 2

Strip cable jacket. Braid and dielectric to dimensions indicated. All cuts are to be square and sharp. Important: Do not nick braid, dielectric or center conductor when cutting. If wire ends of center conductor fray, twist them to their normal lay.

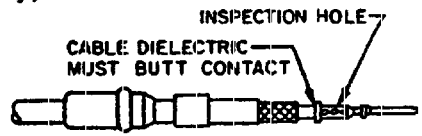

Step 3

Place stripped center conductor into contact until cable dielectric butts contact and end of wire shows through inspection hole (arrow). Insert contact into crimp tool until fully seated in positioner. Crimp with one full stroke. See chart below for crimp tool setting.

CRIMP ON CENTER CONTACT			
Cable	Tool	Positioner	Setting
RG180BU	M22520/2-01	M22520/2-24	No. 5

Step 4

Flare out slightly, ends of wire braid to facilitate insertions on inner ferrule of body assembly. (Do not comb out wire braid.)

Step 5

Install center contact in body assembly and slide inner ferrule underneath wire braid as shown. Center contact shall be inserted until it is locked in place in body assembly. A 3 lb. min. 5 lb. max. pull shall be exerted on cable to ensure that the contact is securely locked in place.

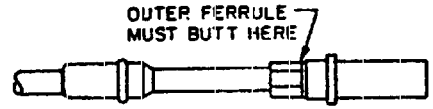

Step 6

Slide outer ferrule over wire braid and up against body assembly as shown. No slack shall exist in wire braid. Crimp outer ferrule with M22520/10-01 basic tool and M22520/10-06 die.

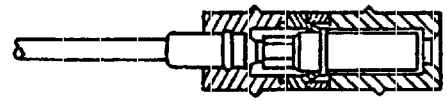

Step 7

The shielded contact now assembled shall be inserted into the connector assembly using ON089564 INSTALLING tool. Push sealing boot forward into grommet of connector until O-ring riser of the boot has effected its snap-in seal. The installation of the shielded contact is then completed for removing contact from connector use ON089565 REMOVAL TOOL.

INSTRUCTION FOR PLASTIC CONTACT INSTALLING TOOLS

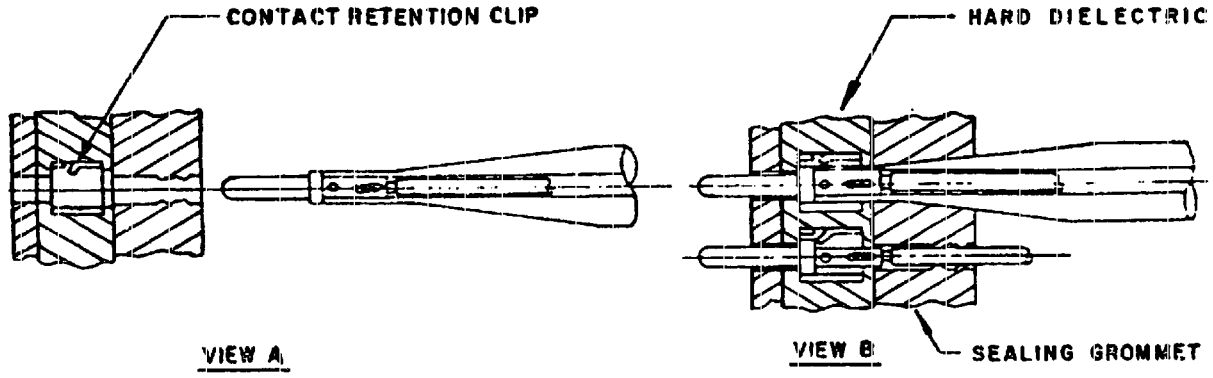

1. Select correct installing tool (See Tool Selection Chart) and place tool around wire attached to contact to be inserted.
2. Slide tool down wire on to contact crimp barrel until it butts against the contact shoulder. (See View A)
3. Grip tool, wire, and contact as a unit and guide contact into connector thru sealing grommet and hard dielectric until contact is firmly seated. (See View B)
4. Release grip on wire and withdraw tool from connector until it clears the grommet. Hold wire forward while tool is being removed from wire.

CAUTION: Assembled contact must be held perpendicular to face of connector during installing. When seating boot do not allow excessive bending or twisting of the cable.

PAGE 7

INSTRUCTION FOR PLASTIC CONTACT REMOVAL TOOLS

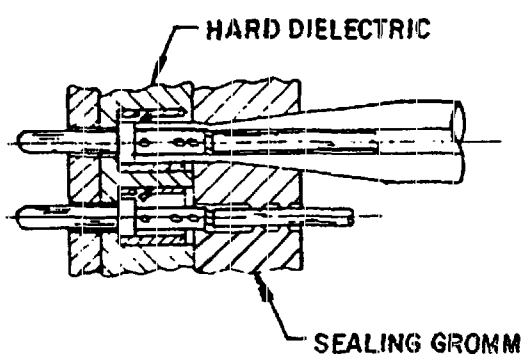

VIEW A

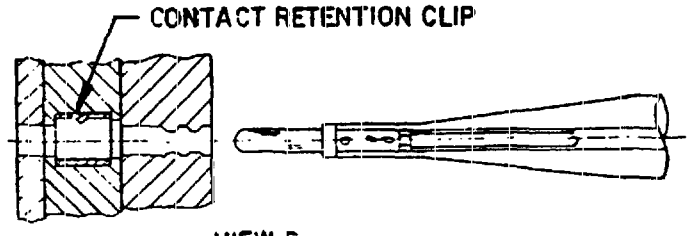

VIEW B

1. Select correct removal tool (See Tool Selection Chart) and place tool around wire attached to contact to be removed.
2. Slide tool down wire into the connector thru the sealing grommet and into the hard dielectric until tool stops against contact shoulder. (See View A)
3. At this stage of removal, tool will collapse contact retention clips to the point where they no longer retain control.
4. Grip wire and tool as a unit and withdraw wire, tool and contact from connector simultaneously. (See View B)

CAUTION: To avoid damage to tool and/or connector, do not tip, spread or rotate tool while in connector.

PAGE 8

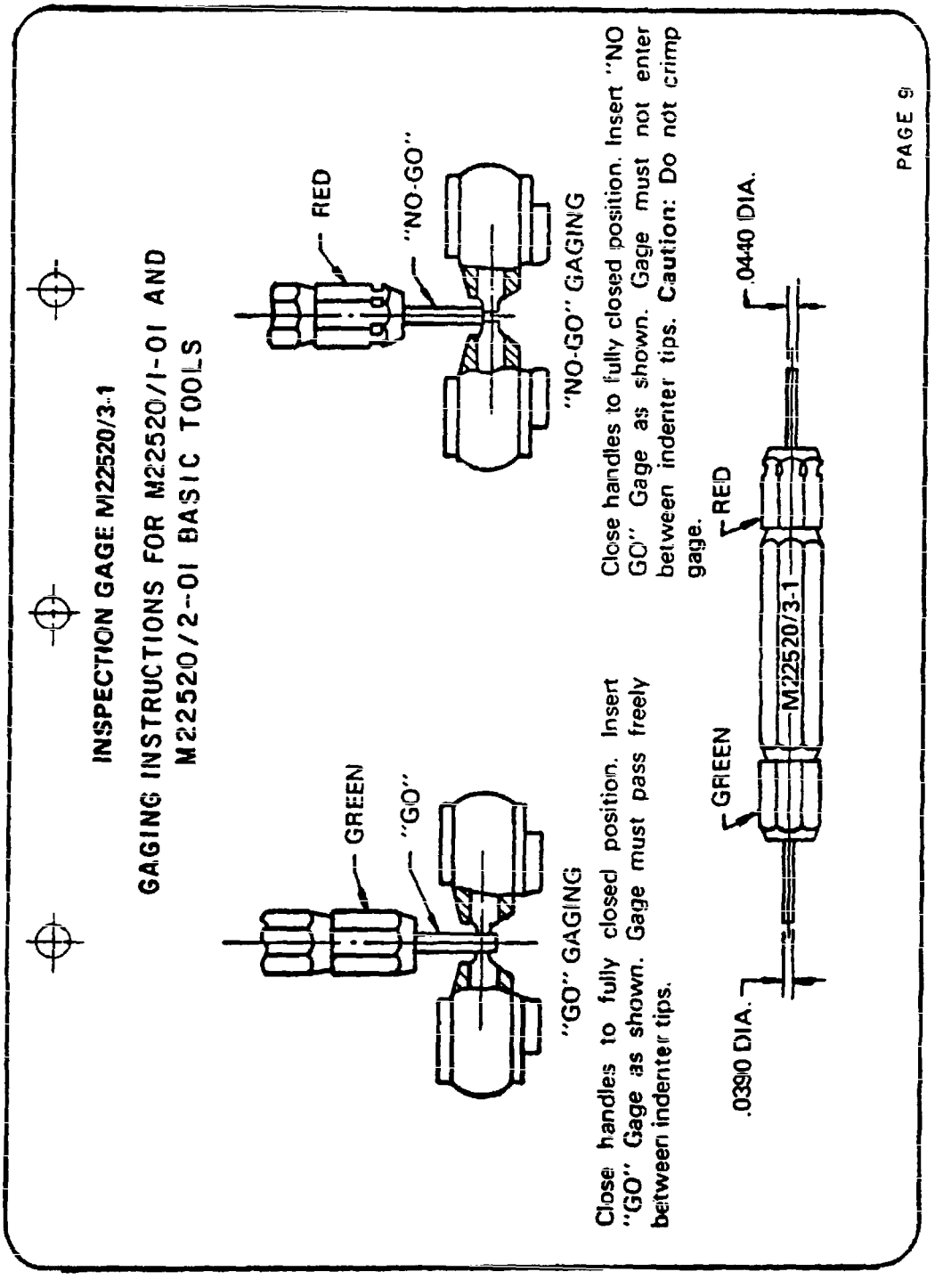
INSPECTION GAGE M22520/3-1
GAGING INSTRUCTIONS FOR M22520/1-01 AND M22520/2-01 BASIC TOOLS
RED
"NO-GO"
"NO-GO" GAGING
Close handles to fully closed position. Insert "NO GO" Gage as shown. Gage must not enter between indenter tips. Caution: Do not crimp gage.
GREEN
"GO"
"GO" GAGING
Close handles to fully closed position. Insert "GO" Gage as shown. Gage must pass freely between indenter tips.
.0440 DIA.
RED
M22520/3-1
GREEN
.0390 DIA.
PAGE 9

PROCEDURE FOR CONTACTS (TWISTED PAIR)

SAME FOR MALE AND FEMALE, (MALE NOT SHOWN)

Step 1

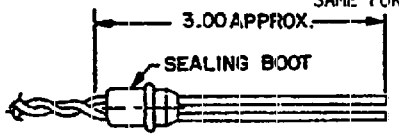

Install sealing boot onto the untwisted wire, as shown, prior to stripping wires.

Step 2

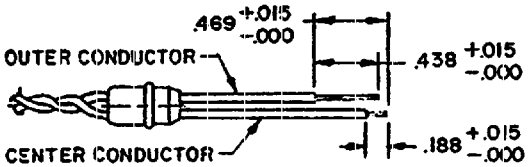

Strip wires to dimensions indicated. All cuts are to be square and sharp. Do not nick conductors during stripping of insulation.

Step 3

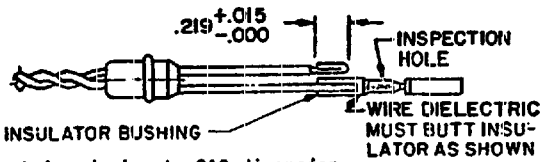

1. Fold longer stripped wire to .219 dimension shown.
2. Place insulator and contact onto shorter stripped wire as shown.
3. Wire center conductor must be visible thru contact inspection hole (arrow).
4. Set selector number 7 on M22520/2-01 basic tool with M22520/2-24 positioner.
5. Insert contact into crimp tool until fully seated in positioner.
6. Crimp with one full stroke.

Step 4

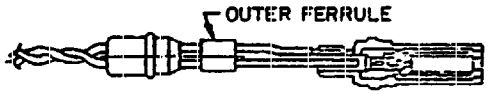

Slide outer ferrule onto cable as shown prior to installing center contact in body assembly. Position folded wire on top of inner ferrule as shown. Center contact shall be inserted until it is locked in place in body assembly. A 3 lb. min. 5 lb. max. pull shall be exerted on cable to ensure that the contact is securely locked in place.

Step 5

Slide outer ferrule over folded wire against body assembly as shown. Crimp outer ferrule with M22520/10-01 basic tool and M22520/10-06 die.

Step 6

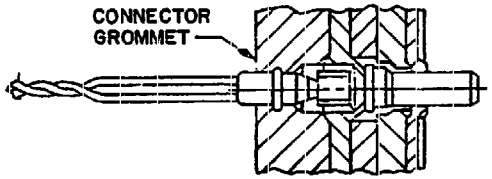

The shielded contact now assembled shall be inserted into the connector assembly using ONO89564installing tool. Push sealing boot forward into the grommet until O-ring riser of the boot has effected its snap-in seal. The installation of the shielded contact is now completed. For removing contact from connector use ONO89565 removal tool.

REQUIREMENTS:

Design and configuration: See figures 1 through 5.

Material:
Case and cover (category 3): Sheet metal, 21 gage in accordance with QQ-S-698, gray baked enamel on all metal parts.
Instruction sheets and contents charts: White vinyl 0.020 inch (0.51 mm) thick.
Insert and retainer pad: Fire retardant foamed polyethylene in accordance with PPP-C-1752; color is optional.

Binder: Looseleaf, three ring, 0.562 inch (14.27 mm) ±0.062 inch (1.57 mm) I.D., 2.75 inches (69.9 mm) center distance between rings, securely riveted to inside of cover as shown.

Clasps, draw pull type with provision for locking device, handles, and hinges: Plated to resist corrosion.

Nameplate: In accordance with MIL-P-19834.

Instruction sheets and contents chart (see pages 6 through 16): Lettering shall be legible and protected with a transparent coating. Contents chart (centered on inside of case cover) shall have pressure sensitive adhesive backing and show the insert cavity configurations and the respective tool part numbers; a list of NSN's will also be supplied.

Part number:
M83507/10-01 - Tool kit for ONO89559, ONO89560, and ONO89561 connectors.
M83507/10-02 - Tool case assembly.

QUALIFICATION:

Qualifying activity: Defense Electronics Supply Center (DESC-E), Dayton, OH 45444.

Custodians:
Army - EL
Navy - AS
Air Force - 85

Review activities:
Army - MI, AR, AV, WC, GL
Navy - SH, EC, OS
Air Force - 11, 17, 99
DLA - ES

User activities:
Army - ME, AT
Navy - MC
Air Force - 19

Preparing activity:
Air Force - 85

(Project 5180-0101)

STANDARDIZATION DOCUMENT IMPROVEMENT PROPOSAL

INSTRUCTIONS: This form is provided to solicit beneficial comments which may improve this document and enhance its use. DoD contractors, government activities, manufacturers, vendors, or other prospective users of the document are invited to submit comments to the government. Fold on lines on reverse side, staple in corner, and send to preparing activity. Attach any pertinent data which may be of use in improving this document. If there are additional papers, attach to form and place both in an envelope addressed to preparing activity. A response will be provided to the submitter, when name and address is provided, within 30 days indicating that the 1426 was received and when any appropriate action on it will be completed.

NOTE: This form shall not be used to submit requests for waivers, deviations or clarification of specification requirements on current contracts. Comments submitted on this form do not constitute or imply authorization to waive any portion of the referenced document(s) or to amend contractual requirements.

DOCUMENT IDENTIFIER *(Number)* AND TITLE

MIL-T-83507/10 Tool Kits, Electrical Connectors, Contacts and Connector and Cable Accessories FSC 5180

NAME OF ORGANIZATION AND ADDRESS OF SUBMITTER

☐ VENDOR ☐ USER ☐ MANUFACTURER

1. ☐ HAS ANY PART OF THE DOCUMENT CREATED PROBLEMS OR REQUIRED INTERPRETATION IN PROCUREMENT USE? ☐ IS ANY PART OF IT TOO RIGID, RESTRICTIVE, LOOSE OR AMBIGUOUS? PLEASE EXPLAIN BELOW.

A. GIVE PARAGRAPH NUMBER AND WORDING

B. RECOMMENDED WORDING CHANGE

C. REASON FOR RECOMMENDED CHANGE(S)

2. REMARKS

SUBMITTED BY *(Printed or typed name and address — Optional)*

TELEPHONE NO.

DATE

DD FORM 1 OCT 76 1426 PREVIOUS EDITION WILL BE USED.

FOLD

POSTAGE AND FEES PAID
DEPARTMENT OF AIR FORCE
DOD 318

U.S.MAIL

OFFICIAL BUSINESS
PENALTY FOR PRIVATE USE $300

AFLC/LOIE/Standardization
Wright-Patterson AFB OH 45433

FOLD