INCH-POUND
MIL-STD-202-217
18 April 2018

SUPERSEDING
MIL-STD-202G
w/CHANGE 2 (IN PART)
28 June 2013
(see 6.1)

DEPARTMENT OF DEFENSE

TEST METHOD STANDARD

METHOD 217, PARTICLE IMPACT NOISE DETECTION (PIND)

AMSC N/A

FSC 59GP

FOREWORD

1. This standard is approved for use by all Departments and Agencies of the Department of Defense.

2. This entire standard has been revised. This revision has resulted in many changes to the format, but the most significant one is the splitting the document into test methods. See MIL-STD-202 for the change summary.

3. Comments, suggestions, or questions on this document should be emailed to std202@dla.mil or addressed to: Commander, Defense Logistics Agency, DLA Land and Maritime, ATTN: VAT, P.O. Box 3990, Columbus, OH 43218–3990. Since contact information can change, you may want to verify the currency of this address information using the ASSIST Online database at https://assist.dla.mil.

CONTENTS

PARAGRAPH		PAGE
	FOREWORD	ii
1.	SCOPE	1
1.1	Purpose	1
2.	APPLICABLE DOCUMENTS	1
2.1	Non-Government publications	1
3.	DEFINTIONS	1
4.	GENERAL REQUIREMENTS	1
4.1	Apparatus	1
4.2.	Procedure	2
4.2.1	Calibration	2
4.2.2	Test setup	2
4.2.3	Test procedure	2
4.2.3.1	Degausing	2
4.2.3.2	Lead protection	2
4.2.3.3	Testing	3
4.2.3.4	Marking	3
4.2.3.5	Failed units	3
5.	DETAILED REQUIREMENTS	3
5.1	Summary	3
6.	NOTES	7
6.1	Supersession data	7

FIGURES	PAGE
1. Typical test circuit	4
2. Representative oscilloscope traces	5
3. Shock test fixture	6

METHOD 217
PARTICLE IMPACT NOISE DETECTION (PIND)

1. SCOPE

1.1 Purpose. The purpose of this test is to detect the presence of free moving particulate contaminants within sealed cavity devices. This test method is specifically directed toward relays and other devices where internal mechanism noise makes rejection exclusively by threshold level impractical. This test method also may be used prior to final sealing in the manufacturing sequence as a means of eliminating loose particles from the interior of the device.

2. APPLICABLE DOCUMENTS

2.1 Non-Government publications. The following documents form a part of this document to the extent specified herein. Unless otherwise specified, the issues of these documents are those cited in the solicitation or contract.

NATIONAL CONFERENCE OF STANDARDS LABORATORIES (NCSL)

NCSL Z540.3 - Requirements for the Calibration of Measuring and Test Equipment

(Copies of this document are available online at www.ncsli.org)

3. DEFINTIONS

This section not applicable to this standard.

4. GENERAL REQUIREMENTS

4.1. Apparatus. The basic PIND system is comprised of the following components: (Substitutions of individual units or complete system may be made providing the test requirements of paragraph 3 are met.)

a. Vibration power source consisting of electrical driver audio oscillator and low frequency audio amplifier.

b. Ultrasonic sound detection system consisting of a crystal transducer with frequency response of 36 kHz - 44 kHz and associated translator preamplifier capable of converting transducer output to 20 Hz - 5 kHz.

c. Small vibration shaker or two shakers coupled together.

d. Oscilloscope, single beam, with 100 kHz minimum bandwidth capable of external synchronization.

e. Audio speaker or headset.

f. Test fixture to adapt transducer to shaker head and isolate it from external noise sources.

g. Holding fixture designed to hold flat surface of unit under test firmly against the sensing surface of the transducer.

h. Shock test fixture (see figure 3).

i. Calibration unit per 4.2.1c.

j. Random vibration generator.

4.2. Procedure. Test equipment shall be assembled as shown on figure 1. System calibration, as defined in 4.2.1b, shall be performed at the following intervals:

a. Each time equipment is turned on.

b. Each change of operators.

c. At initial and completion of test for each group of devices.

d. Every four hours throughout testing.

Whenever system sensitivity is found to be below specified minimum, all units tested subsequent to previous acceptable calibration shall be retested. Units rejected for particle noise shall not be reworked or retested for the purpose of acceptance. Units rejected for excessive mechanism noise may be retested for the purpose of eliminating the mechanism noise.

4.2.1 Calibration.

a. Each unit of test equipment subject to calibration shall be maintained in accordance with NCSL Z540.3.

b. System calibration shall consist of verifying the proper oscilloscope pattern while calibration unit is being energized by the shaker head at the frequency and acceleration specified in 4.2.2. Calibration shall also include elimination of extraneous noise which interferes with proper performance of the test.

c. Test the system with a container (size approximately ½" (12.7 mm) X 1" (25.4 mm) X 1" (25.4 mm) or smaller) which contains a 60/40 solder ball with a diameter of 0.005''. Listen to the audible sound and observe the oscilloscope response to the solder ball.

d. Test the system with a container (size approximately 1/2" (12.7 mm) X 1" (25.4 mm) X 1" (25.4 mm) or smaller) which contains no particle, and compare the audible sound and the oscilloscope response to the results of step c to insure that particles are detectable.

4.2.2 Test setup. The area in which the PIND system is used shall be carefully selected to avoid external interference from electrical and mechanical noise which will decrease the effectiveness of the test.

a. Set audio oscillator to 27 ±1 Hz.

b. Adjust audio amplifier to produce 3-5g (.07" (1.78 mm) - .14" (3.56 mm) displacement) at shaker head.

c. Check mechanical and electrical systems to minimize background noise. Background noise shall not increase more than 3 dB when shaker is placed in operation (except shaker reversal noise) and total system noise shall not exceed 20 mV. Adjust oscilloscope trace to less than 4 divisions displacement and center shaker reversal noise as shown on figure 2a. No other noise spikes shall be detectable.

d. Adjust audio output to comfortable level.

e. With calibration unit mounted on shaker verify proper oscilloscope and system sensitivity to produce random noise spikes of 40 mV minimum (figure 2c).

4.2.3 Test procedure.

4.2.3.1 Degausing. Devices not incorporating permanent magnets and devices being tested prior to final magnetization shall be degaused prior to PIND testing.

4.2.3.2 Lead protection. When a device incorporates relatively long and flexible leads, the leads shall be suitably restrained from striking the shaker/fixture or striking each other during test. Care shall be taken to prevent damage caused by resonance.

4.2.3.3 Testing. Mount unit under test in the center of acoustic transducer with largest flat surface down (paragraph 4b). Energize shaker and monitor for visual and audible evidence of loose internal material as evidenced by nonperiodic noise spikes (figure 2c). A single burst of noise is cause for rejection whether or not the indication can be repeated.

Allow test to proceed for approximately 5 seconds. If no failure is detected, apply a random acceleration for 3 seconds maximum or 3 to 5 shock pulses (not to exceed the rating of the device) perpendicular to the axis of vibration (see figure 3). Monitor for 5 seconds then repeat random vibration or shocks and monitor for an additional 5 seconds (30 seconds maximum per axis).

NOTE: If excessive mechanism noise occurs (figure 2d) such that particle noise would be undetectable, the following action may be taken to reduce the noise:

a. Reorient unit by rotation about the shaker axis.

b. Change shaker amplitude within the specified limits.

c. Tilt shaker axis off vertical in any direction (not exceeding 30°) to provide a gravitational side component to the shaker acceleration.

d. With approval of the procuring agency, a different test frequency may be established for a given device.

e. Cancel out periodic noise.

If no particle is detected rotate unit to another flat surface providing vibration in a different axis. Repeat above test for not to exceed 30 seconds. Units shall not be tested with terminals or other non-cavity portions of the assembly in contact with the transducer.

4.2.3.4 Marking. If specified (see 5.1d), those units which successfully pass PIND test shall be marked "PIND" on any surface providing existing markings are not obscured.

4.2.3.5 Failed units. Those units which exhibit either particle noise or excessive mechanism noise which cannot be eliminated as described in 4.2.3.3 shall be rejected from the lot.

5. DETAILED REQUIREMENTS

5.1 Summary. The following details are to be specified in the individual specification:

a. Test frequency and acceleration if other than specified.

b. Axes of vibration if other than specified.

c. Test duration if other than specified.

d. Test acceptance marking if specified.

e. Frequency and magnitude of random noise generator shall be specified.

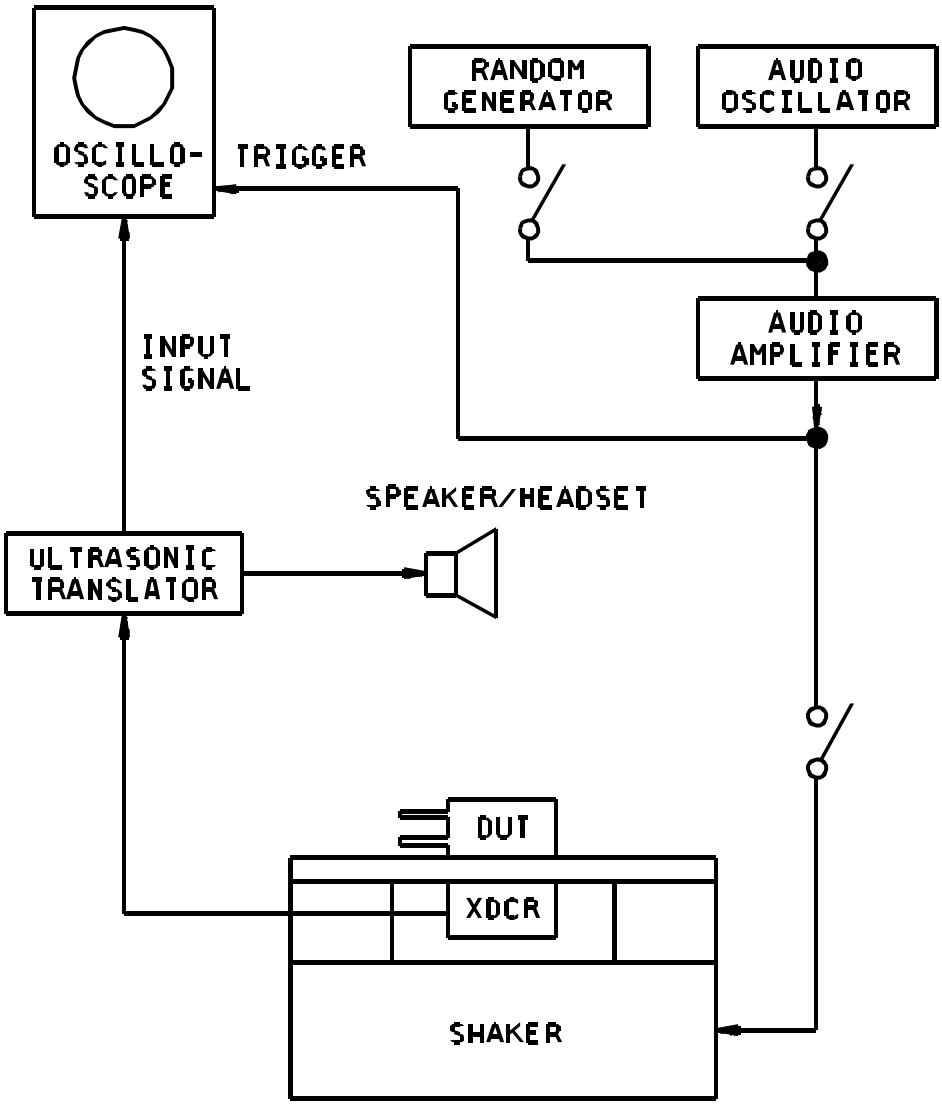

FIGURE 1. Typical test circuit.

ACCEPTANCE CRITERIA: Each unit tested shall meet the acceptance.

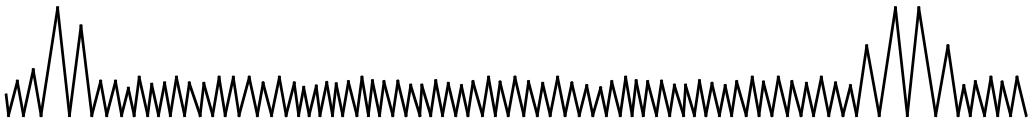

SHAKER NOISE
Timebase adjusted to locate shaker reversal noise bursts at ends of oscilloscope trace. Test unit not mounted. a

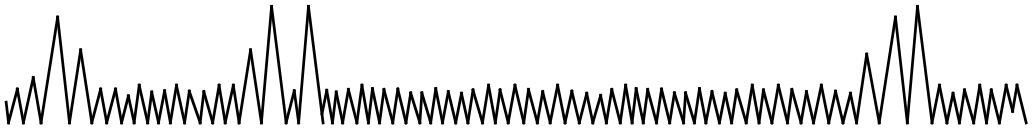

INHERENT MECHANICAL NOISE
Synchronized spike may appear at different locations on time base for each unit under test. b

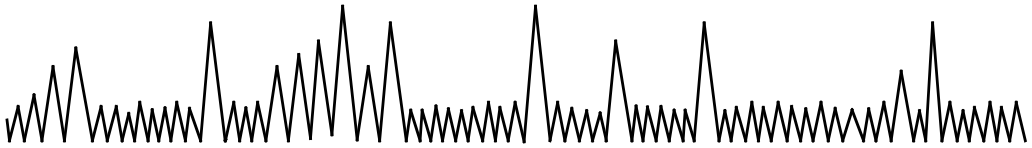

Non-synchronized spikes of any magnitude appear randomly and may disappear as test progresses. Unit is rejectable. c

PARTICULATE NOISE

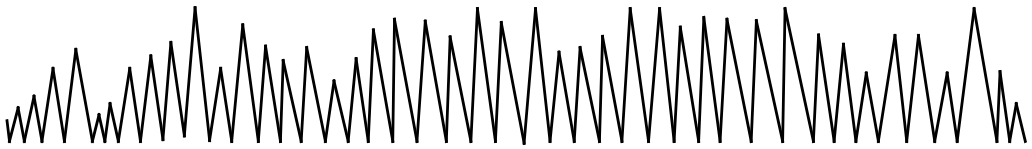

EXCESSIVE MECHANICAL NOISE
Synchronized trace masks more than 50% of oscilloscope trace. Unit is rejectable. d

FIGURE 2. Representative oscilloscope traces.

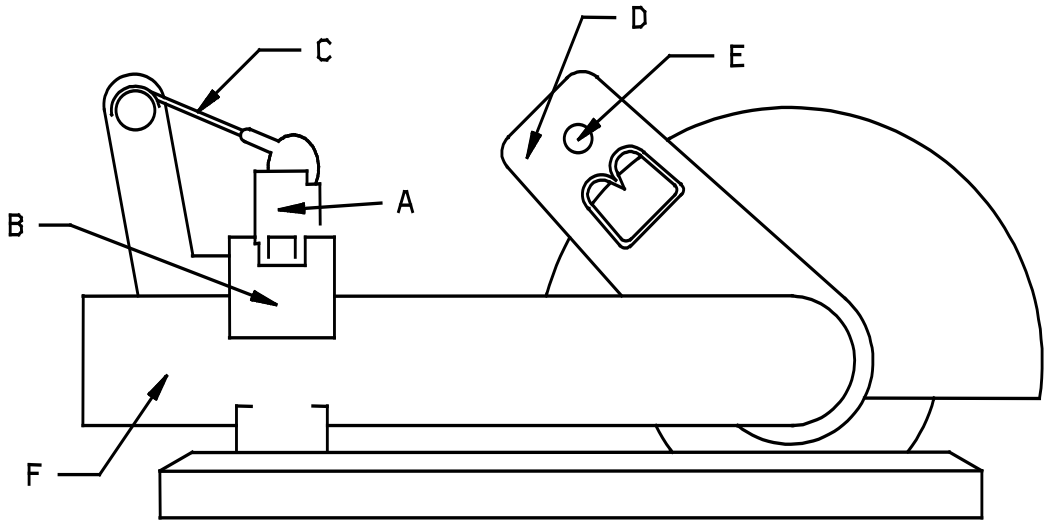

A. Unit under test.
B. Holding fixture.
C. Holding spring.
D. Angle indicator and adjustment.
E. Holding and dropping pin.
F. Dropping arm.

FIGURE 3. Shock test fixture.

6. NOTES

(This section contains information of a general or explanatory nature that may be helpful, but is not mandatory.)

6.1 Supersession data. The main body and 38 parts of this revision of MIL-STD-202 replace superseded MIL-STD-202.

Custodians:
Army - CR
Navy - EC
Air Force - 85
DLA - CC

Review activities:
Army - AR, AT, AV, CR4, MI, SM, TE
Navy - AS, OS, SH
Air Force - 19, 99
NSA - NS

Preparing activity:
DLA – CC

(Project 59GP-2015-030)

NOTE: The activities listed above were interested in this document as of the date of this document. Since organizations and responsibilities can change, you should verify the currency of the information above using the ASSIST Online database at https://assist.dla.mil/