DEFENSE LOGISTICS AGENCY
LAND AND MARITIME
P.O. BOX 3990
COLUMBUS, OH 43218-3990

21 July 2016

MEMORANDUM FOR MILITARY/INDUSTRY DISTRIBUTION

SUBJECT: Initial draft of MIL-STD-1651B (see table below for details).

Initial Draft	Title	Project Number
MIL-STD-1651B with Change 1	Insert Arrangements for SAE-AS50151, MIL-DTL-22992 (Classes C, J and R), MIL-DTL-83723 (Series II) and SAE-AS95234 Circular Electrical Connectors	5935-2016-146

The draft for the subject document, dated 21 July 2016, is now available for viewing and downloading from the DLA Land and Maritime-VA website at the following internet address:

http://www.landandmaritime.dla.mil/programs/milspec/DocSearch.aspx.

The draft MIL-STD-1651 with Change 1 includes minor editorial corrections to table I and clarifications to tables associated with insert arrangements with short shell sizes 8S, 10S, 10SL, 12S, 14S and 16S. These arrangements include 8S-1, 10SL-3, 10SL-4, 12S-3, 12S-4, 14S-1, 14S-2, 14S-4, 14S-5, 14S-6, 14S-7, 14S-9, 16S-1, 16S-2, 16S-4, 16S-5, 16S-6 and 16S-8. These tables have been updated to better indicate that the connector inserts may be configured with either a size “16S” socket contact or a size “16” pin contact. In addition, the figure and table for insert arrangement 18-22 have been updated to change contact location designator “G” to”C”, in accordance with a recently discovered NAWC from 1993 which indicated the change was intended to be implemented in the standard. Qualified manufacturers indicate that they have implemented this change in their products. See “Summary of Change 1 Modifications” on page iii of the draft for other minor changes.

Proposed additions to the document are indicated in the draft with bold lettering and /or yellow highlighting. Proposed deletions are indicated with cross-outs and /or green highlighting.

If this document is of interest to you, please provide your comments or suggested changes. Concurrence or comments are required at this Center within 45 calendar days from the date of this letter (no later than 1 September 2016). Late comments will be held for the next coordination of this document. Comments from military departments must be identified as either "Essential" or "Suggested". Essential comments must be justified with supporting data. Military review activities should forward comments to their military department’s document custodian in sufficient time to allow for consolidation of the department’s reply. Lack of a response by the above due date will be interpreted as either concurrence with or no interest in this document. Subsequent coordination for this document will be circulated only to those interested parties that have responded to the subject initial draft.

Federal Recycling Program Printed on Recycled Paper

SUBJECT: Initial draft of MIL-STD-1651B with Change 1 (see table for details) **– Continued.**

The point of contact for this document is Mrs. Lisa Hoffer, phone number 614-692-7702, DSN 850-7702, facsimile transmission 614-692-6940, or e-mail lisa.hoffer@dla.mil. Comments may also be mailed via the US Postal Service to DLA Land and Maritime–VAI (ATTN: Lisa Hoffer), P.O. Box 3990, Columbus, OH 43218-3990.

Sincerely,

/ SIGNED /

ABDONASSER M. ABDOUNI
Chief,
Interconnection Branch

cc:
DLA Land and Maritime-FMVA (D. Barman)
DLA Land and Maritime -VQP
DSCC.Standardization@dla.mil

Note: This draft, dated 21 July 2016 and prepared by DLA Land and Maritime-VAI, has not been approved and is subject to modification.
DO NOT USE PRIOR TO APPROVAL.
(Project 5935–2016-146).

INCH-POUND

MIL-STD-1651B
w/CHANGE 1
DRAFT
SUPERSEDING
MIL-STD-1651B
6 November 2015

DEPARTMENT OF DEFENSE INTERFACE STANDARD

INSERT ARRANGEMENTS
FOR
SAE-AS50151,
MIL-DTL-22992 (CLASSES C, J AND R),
MIL-DTL-83723 (SERIES II),
AND SAE-AS95234
CIRCULAR ELECTRICAL CONNECTORS

AMSC N/A

FSC 5935

FOREWORD

1. This standard is approved for use by all Departments and Agencies of the Department of Defense.

2. Comments, suggestions, or questions on this document should be addressed to Commander, DLA Land and Maritime, ATTN: VAI, P.O. Box 3990, Columbus, Ohio, 43218-3990 or emailed to CircularConnector@dla.mil. Since contact information can change, you may want to verify the currency of this address information using the ASSIST Online database at https://assist.dla.mil.

SUMMARY OF CHANGE 1 MODIFICATIONS

1. Correction and clarification to Table I, contact size 12-16 and 16-22: In column 5, change socket part number from M39029/45-297 to M39029/45-269. Also, for size 12-16, add the column 5 PINs to column 2, SAE-AS50151, series AS34001 front release connectors. Therefore, pin part number MS39029/44-289 and socket part number MS39029/45-296 have been added to column 3. In addition, contact size 16-22 (front-release SAE-AS95234) also applies to contact size 16-22 in column 3 (front-release AS50151 connectors) and have been added to column 3.

2. Clarification: Add footnote under table I stating size 16S socket contacts are only used with rear-release connector shell sizes 8S, 10S, 10SL, 12S, 14S and 16S.

3. Clarification: For insert arrangements used in "short" connector shells, including insert arrangement 8S-1, 10SL-3, 10SL-4, 12S-3, 12S-4, 14S-1, 14S-2, 14S-4, 14S-5, 14S-6, 14S-7, 14S-9, 16S-1, 16S-2, 16S-4, 16S-5, 16S-6 and 16S-8, update the associated tables to indicate that both 16S (socket) and 16 (pin) contact sizes apply, depending on which connector family and series are specified.

4. Correction: For insert arrangements which apply to SAE-AS95234, but which include a parenthetical note stating "not applicable" to SAE-AS95234, including 10SL-3, 14S-1, 14S-2, 14S-5, 14S-6, 14S-9, 16S-3 and 16S-4.

5. Insert arrangement 18-22 on page 58: Update the figure and the Contact X/Y coordinate table to change the cavity identification letter for contact location "G" to "C". Rationale: During review of the required contact marking requirements, a NAWC memo dated 20 January 1993 was discovered. The memo indicates that this change was intended for a future revision of MIL-STD-1651, but was overlooked for the recent revision C.

CONTENTS

PARAGRAPH PAGE

FOREWORD ii
SUMMARY OF CHANGE 1 MODIFICATIONS iii

1. SCOPE 1
1.1 Scope 1

2. APPLICABLE DOCUMENTS 1
2.1 General 1
2.2 Government documents 1
2.2.1 Specifications, standards, and handbooks 1
2.2.2 Non-Government publications 1
2.3 Order of precedence 1

3. DEFINITIONS 2
3.1 Definitions 2

4. GENERAL REQUIREMENTS 2
4.1 Recycled, recovered, environmentally preferable, or biobased materials 2

5. DETAILED REQUIREMENTS 2
5.1 Dimensions 3
5.2 Marking 3
5.3 Contacts 3

6. NOTES 4
6.1 Intended use 4
6.2 Application notes 4
6.3 Cross-reference 4
6.4 Drawing notes 5
6.5 Subject term (key word) listing 5
6.6 Changes from previous issue 5

FIGURE

1. Insert arrangement, electrical connector, shell size 8, MIL-DTL-83723, series II only, and shell size 8S, SAE-AS50151 only 14
2. Insert arrangement, electrical connector, shell sizes 10 and 11, MIL-DTL-83723, series II only, and shell sizes 10S and 10SL, SAE-AS50151 and SAE- AS95234 only 15
3. Insert arrangement, electrical connector, shell size 12, MIL-DTL-22992, classes C, J and R, MIL-DTL-83723, series II, shell size 12S, SAE-AS50151 only, and shell size 13, MIL-DTL-83723, series II only 18
4. Insert arrangement, electrical connector, shell size 14, MIL-DTL-22992, classes C, J and R, MIL-DTL-83723, series II, and SAE-AS50151, shell size 14S, SAE-AS50151 and SAE-AS95234 only, and shell size 15, MIL-DTL-83723 only 21

CONTENTS

FIGURE

5. Insert arrangement, electrical connector, shell size 16, MIL-DTL-22992, classes C, J and R, MIL-DTL-83723, series II, SAE-AS50151, and SAE-AS95234, shell size 16S, SAE-AS50151 only, and shell size 17, MIL-DTL-83723 only. 29
6. Insert arrangement, electrical connector, shell size 18, MIL-DTL-22992, classes C, J and R, MIL-DTL-83723, series II, SAE-AS50151 and SAE-AS95234 42
7. Insert arrangement, electrical connector, shell size 20, MIL-DTL-22992, classes C, J and R, MIL-DTL-83723, series II, SAE-AS50151 and SAE-AS95234 60
8. Insert arrangement, electrical connector, shell size 22, MIL-DTL-22992, classes C, J and R, MIL-DTL-83723, series II, and SAE-AS50151 and SAE-AS95234 85
9. Insert arrangement, electrical connector, shell size 24, MIL-DTL-22992, classes C, J and R, MIL-DTL-83723, series II, SAE-AS50151 and SAE-AS95234 117
10. Insert arrangement, electrical connector, shell size 28, MIL-DTL-22992, classes C, J and R, MIL-DTL-83723, series II, SAE-AS50151 and SAE-AS95234 139
11. Insert arrangement, electrical connector, shell size 32, MIL-DTL-22992, classes C, J and R, MIL-DTL-83723, series II, SAE-AS50151 and SAE-AS9523 163
12. Insert arrangement, electrical connector, shell size 36, MIL-DTL-22992, classes C, J and R, MIL-DTL-83723, series II, SAE-AS50151 and SAE-AS95234 191
13. Insert arrangement, electrical connector, shell size 40, MIL-DTL-22992, classes C, J and R, MIL-DTL-83723, series II, and SAE-AS50151 219
14. Insert arrangement, electrical connector, shell size 44, MIL-DTL-22992, classes C, J and R, and SAE-AS50151 246
15. Insert arrangement, electrical connector, shell size 48, SAE-AS50151 252

TABLE

I. Contact Part or Identifying Numbers 4
II. Cross-reference of figures to sections 6
III. Cross-reference of insert arrangements by shell size 7
IV. Insert arrangements removed from Revision B to MIL-STD-1651 12
V. Insert arrangements removed from Revision A to MIL-STD-1651 13

CONCLUDING MATERIAL 255

1. SCOPE

1.1 Scope. This standard gives the dimensional requirements for insert arrangements used with SAE-AS50151, MIL-DTL-22992 (Classes C, J and R), and MIL-DTL-83723 (Series II) and SAE-AS95234 electrical connectors.

2. APPLICABLE DOCUMENTS

2.1 General. The documents listed in this section are specified in sections 3, 4, and 5 of this standard. This section does not include documents cited in other sections of this standard or recommended for additional information or as examples. While every effort has been made to ensure the completeness of this list, document users are cautioned that they must meet all specified requirements of documents cited in sections 3, 4, and 5 of this standard, whether or not they are listed.

2.2 Government documents.

2.2.1 Specifications, standards, and handbooks. The following specifications, standards, and handbooks form a part of this document to the extent specified herein. Unless otherwise specified, the issues of these documents are those cited in the solicitation or contract.

DEPARTMENT OF DEFENSE SPECIFICATIONS

MIL-DTL-22992	-	Connectors, Plugs and Receptacles, Electrical, Waterproof, Quick Disconnect, Heavy Duty Type, General Specification for.
MIL-DTL-83723	-	Connectors, Electrical (Circular, Environment Resisting), Receptacles and Plugs, General Specification for.

(Copies of these documents are available online at http://quicksearch.dla.mil/ or from the Standardization Document Order Desk, 700 Robbins Avenue, Building 4D, Philadelphia, PA 19111-5094.)

2.2.2 Non-Government publications. The following documents form a part of this document to the extent specified herein. Unless otherwise specified, the issues of these documents are those cited in the solicitation or contract.

SAE INTERNATIONAL

SAE-AS50151	-	Connectors, Electrical, Circular Threaded, AN Type, General Specification for.
SAE-AS39029	-	Contacts, Electrical Connector, General Specification for.
SAE-AS34001	-	Connectors, Receptacle, Electric, Wall Mounting, Front Release, Crimp Contact, AN Type.
SAE-AS34501	-	Connectors, Receptacle, Electric, Wall Mounting, Rear Release, Crimp Contact, AN Type.
SAE-AS95234	-	Connectors, Electrical, Reverse Bayonet, General Specification for.

(Copies of these documents are available at http://www.sae.org or SAE International, 400 Commonwealth Drive, Warrendale, PA 15096-0001, and Tel: 877-606-7323 (inside USA and Canada) or 724-776-4970 (outside USA), or email: CustomerService@sae.org.)

ASME INTERNATIONAL

ASME Y14.5	-	Dimensioning and Tolerancing.

(Copies of this document are available online at http://www.asme.org or from the ASME International, Three Park Avenue, New York, NY 10016-5990.)

2.3 Order of precedence. Unless otherwise noted herein or in the contract, in the event of a conflict between the text of this document and the references cited herein, the text of this document takes precedence. Nothing in this document, however, supersedes applicable laws and regulations unless a specific exemption has been obtained.

3. DEFINITIONS

3.1 Definitions. The terms used in this standard are generally accepted by the electrical and electronics industries and are commonly used in electrical connector engineering practice, except for the following terminology:

a) Inactive for new design. For this standard, insert arrangements that are specified as "inactive for new design" shall not be used in new designs or equipment. An inactive arrangement may be used to support existing designs or equipment.

b) Common terminology. An illustration depicting common terminology used in this standard is provided below:

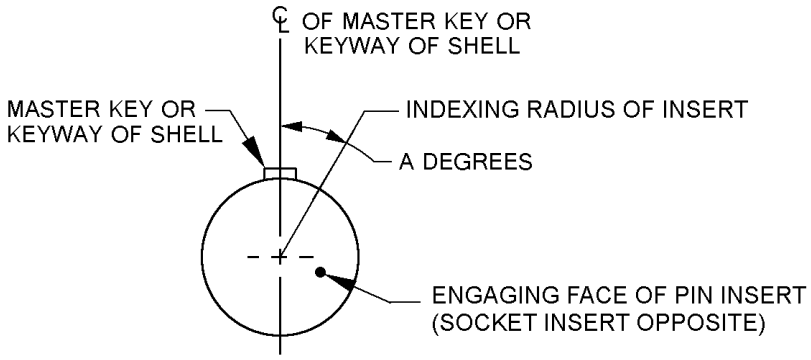

4. GENERAL REQUIREMENTS

4.1 Recycled, recovered, environmentally preferable, or biobased materials. Recycled, recovered, environmentally preferable, or biobased materials should be used to the maximum extent possible, provided that the material meets or exceeds the operational and maintenance requirements, and promotes economically advantageous life cycle costs.

5. DETAILED REQUIREMENTS

5.1 Dimensions. Dimensions shall be in accordance with the applicable figure of this standard and the following dimensional data:

a. Dimensioning and tolerancing in accordance with ASME Y14.5. Dimensions are true position and are in inches.
b. Metric equivalents (to the nearest .01 mm) are given for information only and are based upon 1 inch = 25.4 mm.
c. Dimensions and markings shown are for engaging face of the pin insert. Socket insert is opposite.
d. The following tolerances apply to insert installed in shell:
   1. The center of each contact cavity in the insert for crimp socket contacts shall be located at true position within .014 dia.
   2. The center of engaging end of each pin contact shall be located in true position within .024 dia.
e. Unless otherwise indicated, dimensions are symmetrical about centerline.

The arrow symbol, "🡻" indicates the ℄ (center line) of the insert arrangement.

f. Each insert arrangement is shown in the “normal position” (also known as normal polarization or normal “clocking”) in the shell.

5.2 Marking. Marking shall be in accordance with SAE-AS50151, MIL-DTL-22992, MIL-DTL-83723 or SAE-AS95234, as applicable, and as shown in the applicable insert arrangements included in this standard.

5.3. Contacts. Unless otherwise specified in the insert arrangement, crimp contact Part or Identifying Numbers (PINs) shall be in accordance with table I. Solder contacts shall be in accordance with SAE-AS50151, MIL-DTL-22992 or MIL-DTL-83723 or SAE-AS95234, as applicable.

TABLE I. Contact Part or Identifying Numbers.

Crimp contact PINs 1/				
Contact size	Contact type	SAE-AS39029 PIN for SAE-AS50151 2/	SAE-AS39029 PIN for SAE-AS50151 3/, or MIL-DTL-83723, series II	SAE-AS39029 PIN for SAE-AS95234, front release
0	pin	M39029/44-293	M39029/29-216	M39029/44-293
	socket	M39029/45-300	M39029/30-222	M39029/45-300
4	pin	M39029/44-292	M39029/29-215	M39029/44-292
	socket	M39029/45-299	M39029/30-221	M39029/45-299
8	pin	M39029/44-291	M39029/29-214	M39029/44-291
	socket	M39029/45-298	M39029/30-220	M39029/45-298
12	pin	M39029/44-290	M39029/29-213	M39029/44-290
	socket	M39029/45-297	M39029/30-219	M39029/45-297
12-16	pin	~~Not applicable~~ **M39029/44-289**	Not applicable	M39029/44-289
	socket	**M39029/45-296**		M39029/45-29~~7~~**6**
16	pin	M39029/44-288	M39029/29-212	M39029/44-288
	socket	M39029/45-295	M39029/30-218	M39029/45-295
16-22	pin	~~Not applicable~~ **M39029/44-287**	Not applicable	M39029/44-287
	socket	**M39029/45-294**		M39029/45-294
16S **4/**	socket	Not applicable	M39029/30-217	Not applicable

1/ For connectors with non-removable, fixed contacts with solderable terminations that utilize MIL-STD-1651 insert arrangements, see applicable connector specifications for pin and socket contact requirements.

2/ For SAE-AS50151, series AS34001 (front release) connectors.

3/ For SAE-AS50151, series AS34501 (rear release) connectors.

4/ 16S socket contacts in accordance with SAE-AS39029/30, which have shorter length mating ends than a size 16 socket in accordance with the same document, are only used with rear release SAE-AS50151 connector shell sizes 8S, 10S, 10SL, 12S, 14S and 16S.

6. NOTES

(This section contains information of a general or explanatory nature that may be helpful, but is not mandatory.)

6.1 Intended use. This standard covers insert arrangements for use with SAE-AS50151, series II and III, MIL-DTL-22992, classes C, J or R, MIL-DTL-83723, series II, or SAE-AS95234 connectors. Information pertaining to shell size, arrangement number, number of contacts, size of contacts, service rating, contact location, and superseding information is contained in this document.

6.2 Application notes: The following information is provided as a convenience only. Users should review the applicable military or non-government electrical connector specification for additional details. Note: Some insert arrangements are inactive for new design for one or more connector specifications, but are active for new design for other specifications (see figures 1 through 9).

1. Shell size 8:
   - Shell size 8 is identical to 8S and applies only to MIL-DTL-83723, series II.
   - Shell size 8S applies to SAE-AS50151 only.
   - Shell size 8 and 8S are not applicable to MIL-DTL-22992 or SAE-AS95234.
2. Shell size 10, 10S, 10SL and 11:
   - Shell size 10 is identical to 10S and applies only to MIL-DTL-83723, series II.
   - Shell size 10S applies to SAE-AS50151 only.
   - Shell size 10SL applies to SAE-AS50151 and SAE-AS95234 only.
   - Shell size 10, 10S, 10SL and 11 are not applicable to MIL-DTL-22992.
   - Shell size 11 is identical to 10SL and applies to MIL-DTL-83723, series II only.
3. Shell size 12, 12S, and 13:
   - Shell size 12 applies to SAE-AS50151, MIL-DTL-22992 and MIL-DTL-83723, series II.
   - Shell size 12S applies to SAE-AS50151 only.
   - Shell size 13 is identical to 12S and applies only to MIL-DTL-83723, series II.
   - Shell size 12, 12S and 13 do not apply to SAE-AS95234 only.
4. Shell size 14, 14S, and 15:
   - Shell size 14 applies to SAE-AS50151, MIL-DTL-22992 and MIL-DTL-83723, series II.
   - Shell size 14S applies to SAE-AS50151 and SAE-AS95234 only.
   - Shell size 15 is identical to 14S and applies only to MIL-DTL-83723, series II.
5. Shell size 16, 16S, and 17:
   - Shell size 16 applies to SAE-AS50151, MIL-DTL-22992 and MIL-DTL-83723, series II and SAE-AS95234.
   - Shell size 16S applies to SAE-AS50151 and SAE-AS95234 only.
   - Shell size 17 is identical to 16S and applies only to MIL-DTL-83723, series II.
6. Shell size 44 applies to SAE-AS50151, except insert arrangement 44-52, which also applies to MIL-DTL-22992.
7. Shell size 48 applies to SAE-AS50151 only.

6.3 Cross-reference. See table II for a cross-reference of figures to previous sections. See table III for a cross-reference of figures to their associated insert arrangements for each shell size. For the convenience of the user, table III includes hyper-links to each insert arrangement.

6.4 Drawing notes. The following information is applicable to all insert arrangements specified by this standard.

a. Dimensions are in inches, unless otherwise specified.
b. Metric equivalents are given for information only.
c. Each insert arrangement is shown using a conventional two-dimensional Cartesian system, with two perpendicular axes. The x-axis is always the horizontal centerline, and the y-axis is always the vertical centerline. The origin, or “0,0” point, is always the intersection of the two axes. The axes in each insert arrangement follow the standard two-dimensional, “positive” orientation, with the positive x-axis pointed to the right and the positive y-axis pointed up, as illustrated in the figure below:

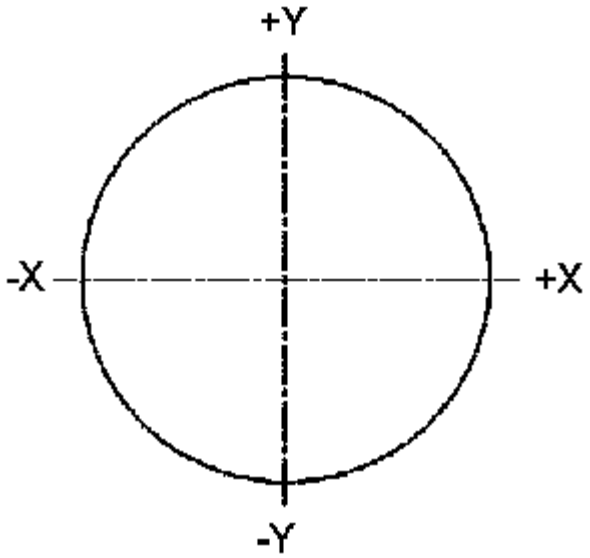

6.5 Subject term (key word) listing.

Alternate insert positions
Insert position
Pin contact
Shell size
Socket contact

6.4 Changes from previous issue. ~~Marginal notations are not used in this revision to identify changes with respect to the previous issue due to the extent of the changes.~~ **The margins of this standard are marked with vertical lines to indicate where changes from the previous issue were made. This was done as a convenience only and the Government assumes no liability whatsoever for any inaccuracies in these notations. Bidders and contractors are cautioned to evaluate the requirements of this document based on the entire content irrespective of the marginal notations and relationship to the previous issue.**

TABLE II. Cross-reference of figures to sections. 1/

Insert arrangements by shell size	Current figure	Previous section	Applicable connector document 2/	Series or class
Insert arrangement, shell sizes 8, 8S	Figure 1	Section 100	MIL-DTL-83723	II
			SAE-AS50151	II, III
Insert arrangement, shell sizes 10, 10S, 10SL, 11	Figure 2	Section 200	MIL-DTL-83723	II
			SAE-AS50151	II, III
			SAE-AS95234	
Insert arrangement, shell sizes 12, 12S, 13	Figure 3	Section 300	MIL-DTL-83723	II
			MIL-DTL-22992	C,J,R
			SAE-AS50151	II, III
Insert arrangement, shell sizes 14, 14S, 15	Figure 4	Section 400	MIL-DTL-83723	II
			MIL-DTL-22992	C,J,R
			SAE-AS50151	II, III
			SAE-AS95234	---
Insert arrangement, shell sizes 16, 16S, 17	Figure 5	Section 500	MIL-DTL-83723	II
			MIL-DTL-22992	C,J,R
			SAE-AS50151	II, III
			SAE-AS95234	---
Insert arrangement, shell size 18	Figure 6	Section 600	MIL-DTL-83723	II
			MIL-DTL-22992	C,J,R
			SAE-AS50151	II, III
			SAE-AS95234	---
Insert arrangement, shell size 20	Figure 7	Section 700	MIL-DTL-83723	II
			MIL-DTL-22992	C,J,R
			SAE-AS50151	II, III
			SAE-AS95234	---
Insert arrangement, shell size 22	Figure 8	Section 800	MIL-DTL-83723	II
			SAE-AS50151	II, III
			SAE-AS95234	---
Insert arrangement, shell size 24	Figure 9	Section 900	MIL-DTL-83723	II
			SAE-AS50151	II, III
			SAE-AS95234	---
Insert arrangement, shell size 28	Figure 10	Section 1000	MIL-DTL-83723	II
			SAE-AS50151	II
			SAE-AS95234	---

See footnotes at end of table.

TABLE II. Cross-reference of figures to sections - Continued. 1/

Insert arrangements by shell size	Current figure	Previous section	Applicable connector document 2/	Series or class
Insert arrangement, shell size 32	Figure 11	Section 1100	MIL-DTL-83723	II
			SAE-AS50151	II
			SAE-AS95234	---
Insert arrangement, shell size 36	Figure 12	Section 1200	MIL-DTL-83723	II
			SAE-AS50151	II
			SAE-AS95234	---
Insert arrangement, shell size 40	Figure 13	Section 1300	MIL-DTL-83723	II
			SAE-AS50151	II
Insert arrangement, shell size 44	Figure 14	Section 1400	MIL-DTL-83723	II
			SAE-AS50151	II, III
Insert arrangement, shell size 48	Figure 15	Section 1500	SAE-AS50151	II, III

1/ In previous revisions of this document, insert arrangements were separated by shell sizes into separate sections.

2/ Some insert arrangements may not be applicable to a referenced electrical connector document. See figures 1 through 15, insert arrangements for shell sizes 8 through 48, for specific information on applicable documents associated with specific insert arrangements. In addition, each figure title and the associated application notes (6.2) provide useful information on applicable insert arrangements.

TABLE III. Cross-reference of insert arrangements by shell size.

Shell sizes 8, 8S, figure 1			
Insert arrangement	Page	Insert arrangement	Page
8-1, 8S-1	14	----	---

See footnote at end of table.

Shell sizes 10, 10S, 10SL, 11 figure 2			
Insert arrangement	Page	Insert arrangement	Page
10-2	15	10SL-4, 11-4	17
10SL-3, 11-3 1/	16	----	---

See footnote at end of table.

Shell sizes 12, 12S, 13, figure 3			
Insert arrangement	Page	Insert arrangement	Page
12S-3, 13-3	18	12-5	20
12S-4, 13-4	19	----	----

See footnote at end of table.

TABLE III. Cross-reference of insert arrangements by shell size -Continued.

Shell sizes 14, 14S, 15, figure 4			
Insert arrangement	Page	Insert arrangement	Page
14S-1, 15-1	21	14S-5, 15-5	25
14S-2, 15-2	22	14S-6, 15-6	26
14-3	23	14S-7, 15-7	27
14S-4, 15-4 1/	24	14S-9, 15-9	28

See footnote at end of table.

Shell sizes 16, 16S, 17, figure 5			
Insert arrangement	Page	Insert arrangement	Page
16S-1, 17-1	29	16S-8, 17-8	36
16-2	30	16-9	37
16S-3, 17-3	31	16-10	38
16S-4, 17-4	32	16-11	39
16S-5, 17-5 1/	33	16-12	40
16S-6, 17-6 1/	34	16-13	41
16-7	35	----	---

See footnote at end of table.

Shell size 18, figure 6			
Insert arrangement	Page	Insert arrangement	Page
18-1 1/	42	18-11 1/	51
18-3 1/	43	18-12 1/	52
18-4 1/	44	18-13 1/	53
18-5 1/	45	18-14 1/	54
18-6	46	18-15 1/	55
18-7	47	18-16 1/	56
18-8 1/	48	18-20 1/	57
18-9	49	18-22 1/	58
18-10 1/	50	18-29 1/	59

See footnote at end of table.

TABLE III. Cross-reference of insert arrangements by shell size - Continued.

Shell size 20, figure 7			
Insert arrangement	Page	Insert arrangement	Page
20-2	60	20-17	73
20-3 1/	61	20-18	74
20-4	62	20-19 1/	75
20-5 1/	63	20-20 1/	76
20-6 1/	64	20-21	77
20-7	65	20-22	78
20-8	66	20-23 1/	79
20-9	67	20-24 1/	80
20-11 1/	68	20-27	81
20-12 1/	69	20-29	82
20-14	70	20-31	83
20-15	71	20-33	84
20-16	72	---	---

See footnote at end of table.

Shell size 22, figure 8			
Insert arrangement	Page	Insert arrangement	Page
22-1 1/	85	22-17	102
22-2	86	22-18	103
22-3 1/	87	22-19	104
22-4 1/	88	22-20 1/	105
22-5	89	22-21	106
22-6 1/	90	22-22	107
22-7	91	22-23	108
22-8 1/	92	22-24 1/	109
22-9	93	22-25 1/	110
22-10	94	22-27	111
22-11	95	22-28 1/	112
22-12	96	22-29 1/	113
22-13 1/	97	22-33 1/	114
22-14	98	22-34 1/	115
22-15	100	22-36	116
22-16 1/	101	----	---

See footnote at end of table.

TABLE III. Cross-reference of insert arrangements by shell size - Continued.

Shell size 24, figure 9			
Insert arrangement	Page	Insert arrangement	Page
24-1 1/	117	24-14 1/	128
24-2	118	24-16	129
24-3 1/	119	24-17 1/	130
24-4	120	24-20	131
24-5	121	24-21	132
24-6	122	24-22	133
24-7	123	24-23 1/	134
24-9 1/	124	24-27	135
24-10	125	24-28	136
24-11	126	24-80 1/	137
24-12	127	---	---

See footnote at end of table.

Shell size 28, figure 10			
Insert arrangement	Page	Insert arrangement	Page
28-1	139	28-12	149
28-2	140	28-14 1/	151
28-3	141	28-15 1/	152
28-4	142	28-16 1/	154
28-5	143	28-17	156
28-6 1/	144	28-18	157
28-8	145	28-19	158
28-9	146	28-20	159
28-10	147	28-21	160
28-11	148	28-22	162

See footnote at end of table.

Shell size 32, figure 11			
Insert arrangement	Page	Insert arrangement	Page
32-1	163	32-10 1/	177
32-2	164	32-12 1/	178
32-3	165	32-13	180
32-4 1/	166	32-14 1/	182
32-5 1/	168	32-15	183
32-6	169	32-17	184
32-7	171	32-22	185
32-8 1/	173	32-63	187
32-9	175	32-73	188

See footnote at end of table.

TABLE III. Cross-reference of insert arrangements by shell size - Continued.

Shell size 36, figure 12			
Insert arrangement	Page	Insert arrangement	Page
36-1 1/	191	36-10	203
36-3	193	36-13 1/	206
36-4 1/	194	36-14 1/	208
36-5	195	36-15	210
36-6	196	36-19 1/	212
36-7	197	36-52	214
36-8	199	36-66	216
36-9	201	----	---

See footnote at end of table.

Shell size 40, figure 13			
Insert arrangement	Page	Insert arrangement	Page
40-1	219	40-7	231
40-2	221	40-9	233
40-3	223	40-10	235
40-4	225	40-11	237
40-5	227	40-56	239
40-6	229	40-62	243

See footnote at end of table.

Shell size 44, figure 14			
Insert arrangement	Page	Insert arrangement	Page
44-1	246	44-52	248

See footnote at end of table.

Shell size 48, figure 15			
Insert arrangement	Page	Insert arrangement	Page
48-62	252	----	---

1/ Inactive for new design.

TABLE IV. Insert arrangements removed from MIL-STD-1651 by revision B.

Insert arrangement	Status in MIL-STD-1651	Replacement
12S, 13-1	Cancelled after 6 November 2015	---
12S, 13-2	Cancelled after 6 November 2015	---
14S, 15-10	Cancelled after 6 November 2015	---
14S, 15-11	Cancelled after 6 November 2015	---
14S, 15-12	Cancelled after 6 November 2015	---
14S, 15-13	Cancelled after 6 November 2015	---
16S, 17-14	Cancelled after 6 November 2015	---
16S, 17-15	Cancelled after 6 November 2015	16S, 17-4
16S, 17-16	Cancelled after 6 November 2015	16S, 17-4
16S, 17-17	Cancelled after 6 November 2015	16-14
18-17	Cancelled after 6 November 2015	18-9
18-18	Cancelled after 6 November 2015	18-9
18-19	Cancelled after 6 November 2015	---
18-23	Cancelled after 6 November 2015	18-1
18-24	Cancelled after 6 November 2015	18-1
18-25	Cancelled after 6 November 2015	18-3
18-26	Cancelled after 6 November 2015	18-3
18-27	Cancelled after 6 November 2015	18-5
18-28	Cancelled after 6 November 2015	18-5
18-30	Cancelled after 6 November 2015	18-20
18-31	Cancelled after 6 November 2015	18-20
20-10	Cancelled after 6 November 2015	---
20-13	Cancelled after 6 November 2015	---
20-25	Cancelled after 6 November 2015	20-11
20-26	Cancelled after 6 November 2015	---
20-30	Cancelled after 6 November 2015	20-11
20-32	Cancelled after 6 November 2015	20-7
22-30	Cancelled after 6 November 2015	22-14
22-32	Cancelled after 6 November 2015	22-5
22-35	Cancelled after 6 November 2015	---
24-15	Cancelled after 6 November 2015	24-5
24-18	Cancelled after 6 November 2015	---
24-24	Cancelled after 6 November 2015	24-5
24-25	Cancelled after 6 November 2015	24-6
24-26	Cancelled after 6 November 2015	24-6
28-7	Cancelled after 6 November 2015	---
28-13	Cancelled after 6 November 2015	28-12
28-23	Cancelled after 6 November 2015	---
28-24	Cancelled after 6 November 2015	---
32-16	Cancelled after 6 November 2015	32-6
32-18	Cancelled after 6 November 2015	32-4
32-19	Cancelled after 6 November 2015	32-1
32-20	Cancelled after 6 November 2015	32-6
32-101	Cancelled after 6 November 2015	---
32-102	Cancelled after 6 November 2015	---
36-2	Cancelled after 6 November 2015	---
36-11	Cancelled after 6 November 2015	36-10
36-12	Cancelled after 6 November 2015	36-10

TABLE IV. Insert arrangements removed from MIL-STD-1651 by Revision B.

Insert arrangement	Status in MIL-STD-1651	Replacement
36-16	Cancelled after 6 November 2015	36-7
36-17	Cancelled after 6 November 2015	36-7
36-18	Cancelled after 6 November 2015	36-9
36-20	Cancelled after 6 November 2015	---
36-21	Cancelled after 6 November 2015	36-9
40-12	Cancelled after 6 November 2015	---
40-13	Cancelled after 6 November 2015	40-2
40-14	Cancelled after 6 November 2015	---
40-15	Cancelled after 6 November 2015	---
44-2	Cancelled after 6 November 2015	---
44-3	Cancelled after 6 November 2015	---
44-4	Cancelled after 6 November 2015	---
44-5	Cancelled after 6 November 2015	44-1
44-6	Cancelled after 6 November 2015	44-1
48-1	Cancelled after 6 November 2015	---
48-2	Cancelled after 6 November 2015	---
48-3	Cancelled after 6 November 2015	---
48-4	Cancelled after 6 November 2015	---
48-5	Cancelled after 6 November 2015	---

TABLE V. Insert arrangements removed from MIL-STD-1651 by Revision A.

Insert Arrangement	Status in MIL-STD-1651
10, 10S-5	Not to be used
10, 10S-6	Cancelled after 17 December 1958
12S, 13-6	Cancelled after 8 March 1945
14S, 15-8	Not to be used
18-2	Cancelled after 19 May 1945
18-21	Cancelled after 25 November 1949
20-1	Cancelled after 1 June 1945
20-28	Cancelled after 1 June 1945
22-26	Not to be used
22-31	Not to be used
22-37	Cancelled after 26 June 1945
24-8	Cancelled after 26 June 1945
24-13	Cancelled after 26 June 1945
24-19	Cancelled after 26 June 1945
32-11	Cancelled after 26 June 1945
40-8	Not to be used

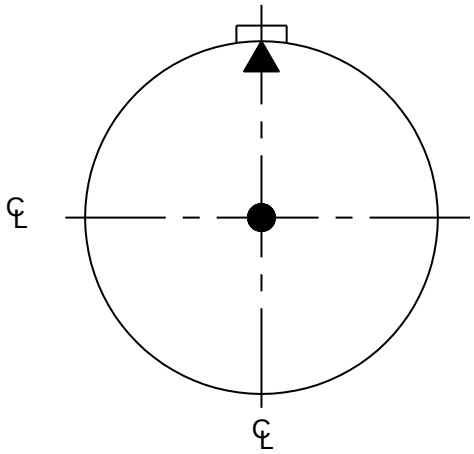

8-1 and 8S-1

(Not applicable to MIL-DTL-22992 or SAE-AS95234.)

Contacts (Insert arrangements 8-1 and 8S-1)		
Contact position identification (ID)	Contact location	
	X-axis (mm)	Y-axis (mm)
Not applicable	+.000 (0.00)	+.000 (0.00)

Shell size	Arrangement number	Number of contacts	Size contacts	Service rating	Contact location	Supersedes
8S	-1	1	**16 (pin)** **16S (socket)**	A	All	MS33680-1
8	**-1**	**1**	**16**	**A**	**All**	

Note: This insert arrangement has no alternate insert positions.

FIGURE 1. Insert arrangement, electrical connector, shell size 8, MIL-DTL-83723, series II only, and shell size 8S, SAE-AS50151 only.

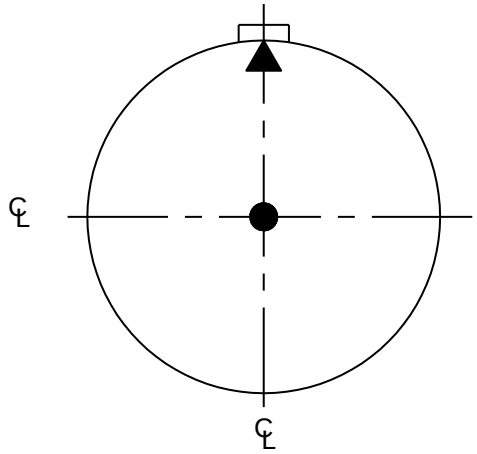

10-2 and 10S-2

(Not applicable to MIL-DTL-22992 or SAE-AS95234.)

Contacts (Insert arrangements 10-2 and 10S-2)		
Contact position identification (ID)	Contact location	
	X-axis (mm)	Y-axis (mm)
Not applicable	+.000 (0.00)	+.000 (0.00)

Shell size	Arrangement number	Number of contacts	Size contacts	Service rating	Contact location	Supersedes
10**S**	-2	1	**16S (socket)** **16 (pin)**	A	All	MS33680-2
10~~S~~	-2	1	16	A	All	

Note: This insert arrangement has no alternate insert positions.

FIGURE 2. Insert arrangement, electrical connector, shell sizes 10 and 11, MIL-DTL-83723, series II only, and shell sizes 10S and 10SL, SAE-AS50151 and SAE- AS95234 only – Continued.

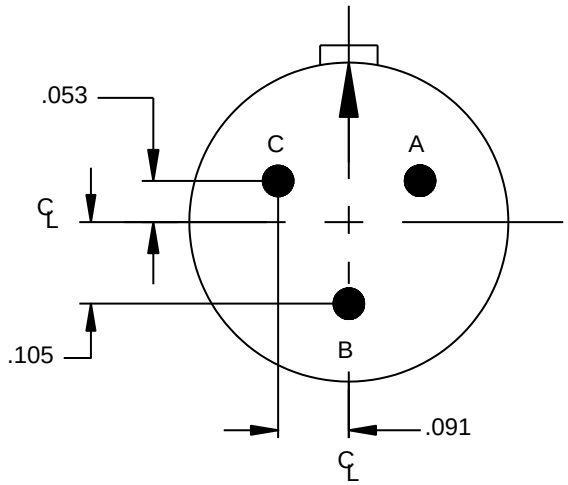

10SL-3 and 11-3

(Not applicable to MIL-DTL-22992 ~~or SAE-AS95234~~.)

Contacts (Insert arrangements 10SL-3 and 11-3)		
Contact position identification (ID)	Contact location	
	X-axis (mm)	Y-axis (mm)
A	+.091 (2.31)	+.053 (1.35)
B	+.000 (0.00)	-.105 (2.66)
C	-.091 (2.31)	+.053 (1.35)

Shell size	Arrangement number	Number of contacts	Size contacts **(see note)**	Service rating	Contact location	Supersedes
10SL	-3	3	16S **(socket)** **16 (socket)** **16 (pin)**	INST	All	MS33680-3
11	-3	3	16	A	All	

Note: This insert arrangement has no alternate insert positions. **16S sockets (M39029/30-217) are applicable to rear release, SAE-AS50151 connectors only. Size 16 sockets (M39029/45-295) are applicable to SAE-AS95234 front release connectors.**

FIGURE 2. Insert arrangement, electrical connector, shell sizes 10 and 11, MIL-DTL-83723, series II only, and shell sizes 10S and 10SL, SAE-AS50151 and SAE- AS95234 only – Continued.

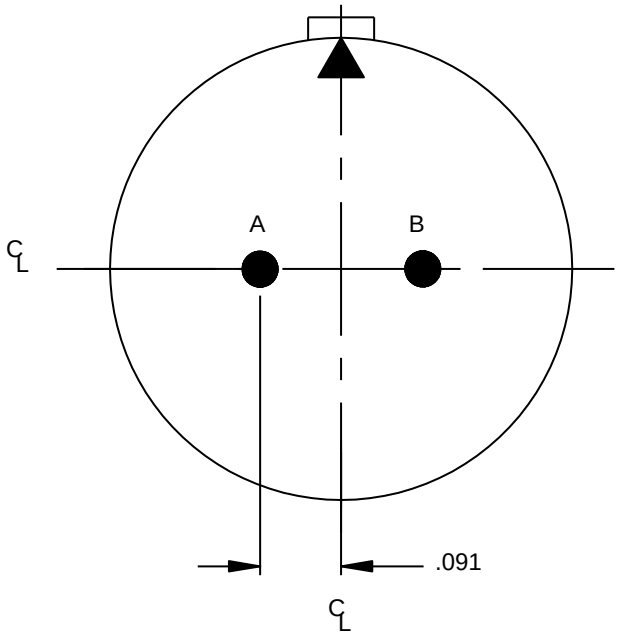

10SL-4 and 11-4

(Inactive for new design after 17 Dec 1958 for SAE-AS50151 and MIL-DTL-83723 series II. Active for new design for SAE-AS95234.)

(Not applicable to MIL-DTL-22992.)

Contacts (Insert arrangements 10SL-4 and 11-4)		
Contact position identification (ID)	Contact location	
	X-axis (mm)	Y-axis (mm)
A	-.091 (2.31)	+.000 (0.00)
B	+.091 (2.31)	+.000 (0.00)

Shell size	Arrangement number	Number of contacts	Size contacts **(see note)**	Service rating	Contact location	Supersedes
10SL	-4	2	16S **(socket)** **16 (socket)** **16 (pin)**	A	All	MS33680-4
11	-4	2	16	A	All	

Note: This insert arrangement has no alternate insert positions. **16S sockets (M39029/30-217) are applicable to rear release, SAE-AS50151 connectors only. Size 16 sockets (M39029/45-295) are applicable to SAE-AS95234 front release connectors.**

FIGURE 2. Insert arrangement, electrical connector, shell sizes 10 and 11, MIL-DTL-83723, series II only, and shell sizes 10S and 10SL, SAE-AS50151 and SAE- AS95234 only – Continued.

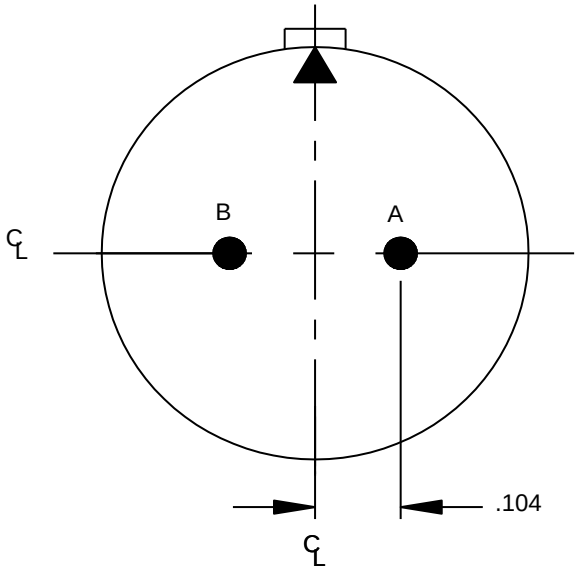

12S-3 and 13-3

(Not applicable to SAE-AS95234.)

Contacts (Insert arrangements 12S-3 and 13-3)		
Contact position identification (ID)	Contact location	
	X-axis (mm)	Y-axis (mm)
A	+.104 (2.64)	+.000 (0.00)
B	-.104 (2.64)	-.000 (0.00)

Shell size	Arrangement number	Number of contacts	Size contacts	Service rating	Contact location	Supersedes
12S	-3	2	16S **(socket)** **16 (pin)**	A	All	MS33681-3
13	-3	2	16	A	All	

Alternate insert positions			
A degrees (A°)			
W	X	Y	Z
70	145	215	290

FIGURE 3. Insert arrangement, electrical connector, shell size 12, MIL-DTL-22992, classes C, J and R, MIL-DTL-83723, series II, shell sizes 12S, SAE-AS50151 only, and shell size 13, MIL-DTL-83723, series II only.

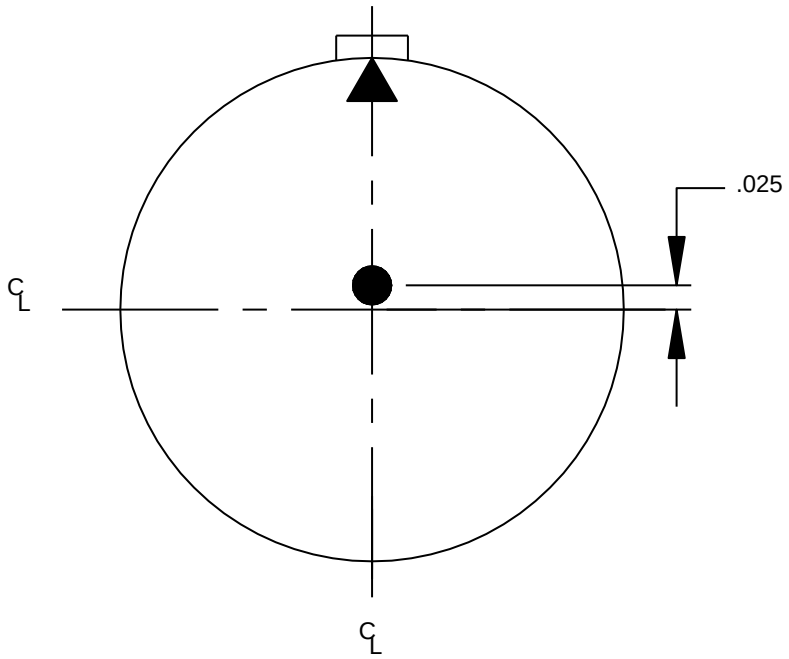

12S-4 and 13-4

(Not applicable to SAE-AS95234.)

Contacts (Insert arrangements 12S-4 and 13-4)		
Contact position identification (ID)	Contact location	
	X-axis (mm)	Y-axis (mm)
Not applicable	+.000 (0.00)	+.025 (0.64)

Shell size	Arrangement number	Number of contacts	Size contacts	Service rating	Contact location	Supersedes
12S	-4	1	16S **(socket)** **16 (pin)**	D	All	MS33681-4
13	-4	1	16	D	All	

Note: This insert arrangement has no alternate insert positions.

FIGURE 3. Insert arrangement, electrical connector, shell size 12, MIL-DTL-22992, classes C, J and R, MIL-DTL-83723, series II, shell sizes 12S, SAE-AS50151 only, and shell size 13, MIL-DTL-83723, series II only – Continued.

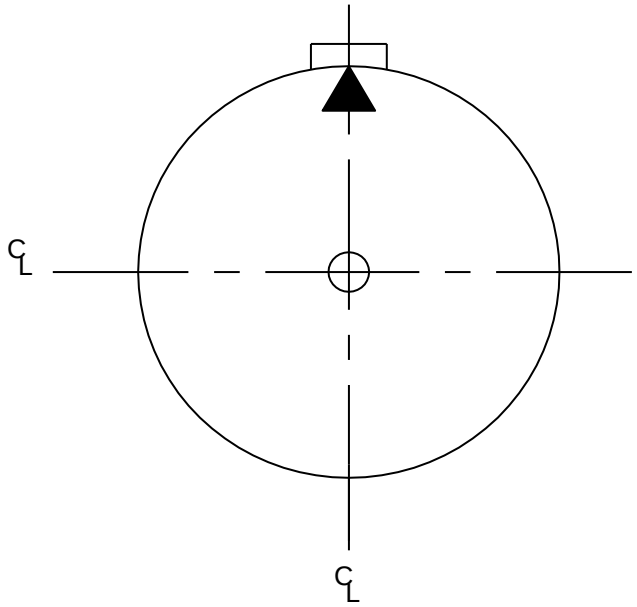

12-5

(Not applicable to SAE-AS95234.)

Contacts (Insert arrangement 12-5)		
Contact position identification (ID)	Contact location	
	X-axis (mm)	Y-axis (mm)
Not applicable	+.000 (0.00)	+.000 (0.00)

Shell size	Arrangement number	Number of contacts	Size contacts	Service rating	Contact location	Supersedes
12	-5	1	12	D	All	MS33681-5

Note: This insert arrangement has no alternate insert positions.

FIGURE 3. Insert arrangement, electrical connector, shell size 12, MIL-DTL-22992, classes C, J and R, MIL-DTL-83723, series II, shell sizes 12S, SAE-AS50151 only, and shell size 13, MIL-DTL-83723, series II only – Continued.

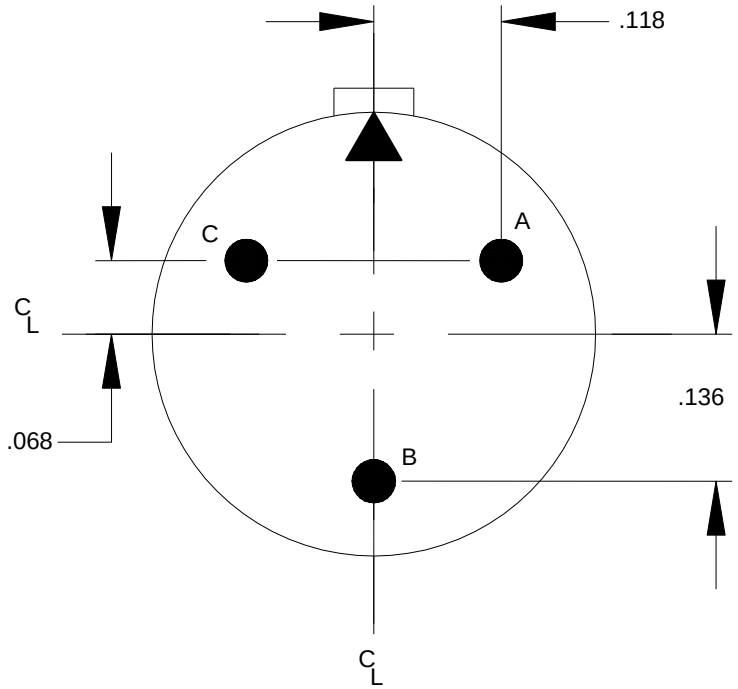

14S-1 and 15-1

(~~Not~~ **Insert arrangement 14S-1 a**pplicable to SAE-AS95234.)

Contacts (Insert arrangements 14S-1 and 15-1)		
Contact position identification (ID)	Contact location	
	X-axis (mm)	Y-axis (mm)
A	+.118 (3.00)	+.068 (1.73)
B	+.000 (0.00)	-.136 (3.45)
C	-.118 (3.00)	+.068 (1.73)

Shell size	Arrangement number	Number of contacts	Size contacts **(see note)**	Service rating	Contact location	Supersedes
14S	-1	3	16S **(socket)** **16 (socket)** **16 (pin)**	A	All	MS33682-1
15	-1	3	16	A	All	

Note: This insert arrangement has no alternate insert positions. **16S sockets (M39029/30-217) are applicable to rear release, SAE-AS50151 connectors only. Size 16 sockets (M39029/45-295) are applicable to SAE-AS95234 front release connectors.**

FIGURE 4. Insert arrangement, electrical connector, shell size 14, MIL-DTL-22992, classes C, J and R, MIL-DTL-83723, series II, SAE-AS50151, shell size 14S, SAE-AS50151 and SAE-AS95234 only, and shell size 15, MIL-DTL-83723 only.

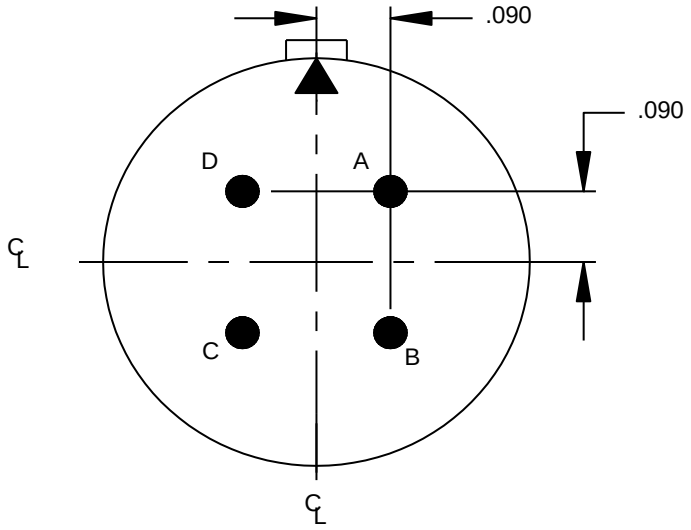

14S-2 and 15-2

(~~Not~~ **Insert arrangement 14S-2 a**pplicable to SAE-AS95234.)

Contacts (Insert arrangements 14S-2 and 15-2)		
Contact position identification (ID)	Contact location	
	X-axis (mm)	Y-axis (mm)
A	+.090 (2.29)	+.090 (2.29)
B	+.090 (2.29)	-.090 (2.29)
C	-.090 (2.29)	-.090 (2.29)
D	-.090 (2.29)	+.090 (2.29)

Shell size	Arrangement number	Number of contacts	Size contacts **(see note)**	Service rating	Contact location	Supersedes
14S	-2	4	16S **(socket)** **16 (socket)** **16 (pin)**	INST	All	MS33682-2
15	-2	4	16	INST	All	

Note: 16S sockets (M39029/30-217) are applicable to rear release, SAE-AS50151 connectors only. Size 16 sockets (M39029/45-295) are applicable to SAE-AS95234 front release connectors.

Alternate insert positions			
A degrees (A°)			
W	X	Y	Z
---	120	240	---

FIGURE 4. Insert arrangement, electrical connector, shell size 14, MIL-DTL-22992, classes C, J and R, MIL-DTL-83723, series II, SAE-AS50151, shell size 14S, SAE-AS50151 and SAE-AS95234 only, and shell size 15, MIL-DTL-83723 only – Continued.

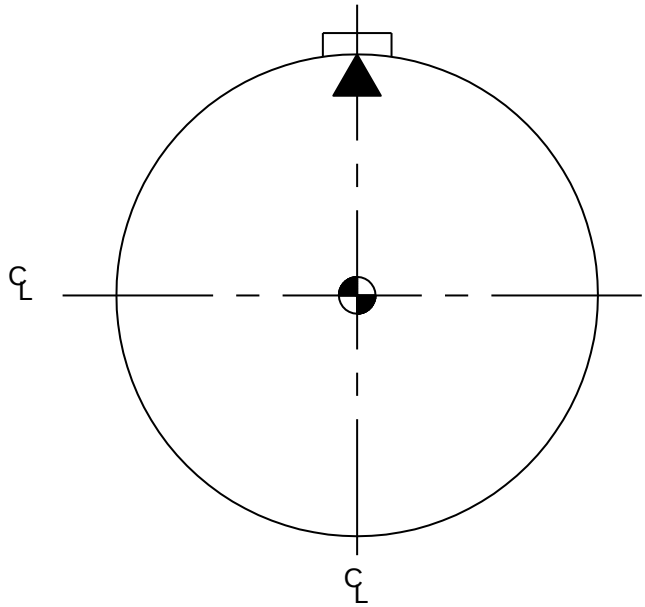

14-3

(Not applicable to SAE-AS95234.)

Contacts (Insert arrangements 14-3)		
Contact position identification (ID)	Contact location	
	X-axis (mm)	Y-axis (mm)
Not applicable	+.000 (0.00)	+.000 (0.00)

Shell size	Arrangement number	Number of contacts	Size contacts	Service rating	Contact location	Supersedes
14	-3	1	8	A	All	MS33682-3

Note: This insert arrangement has no alternate insert positions.

FIGURE 4. Insert arrangement, electrical connector, shell size 14, MIL-DTL-22992, classes C, J and R, MIL-DTL-83723, series II, SAE-AS50151, shell size 14S, SAE-AS50151 and SAE-AS95234 only, and shell size 15, MIL-DTL-83723 only – Continued.

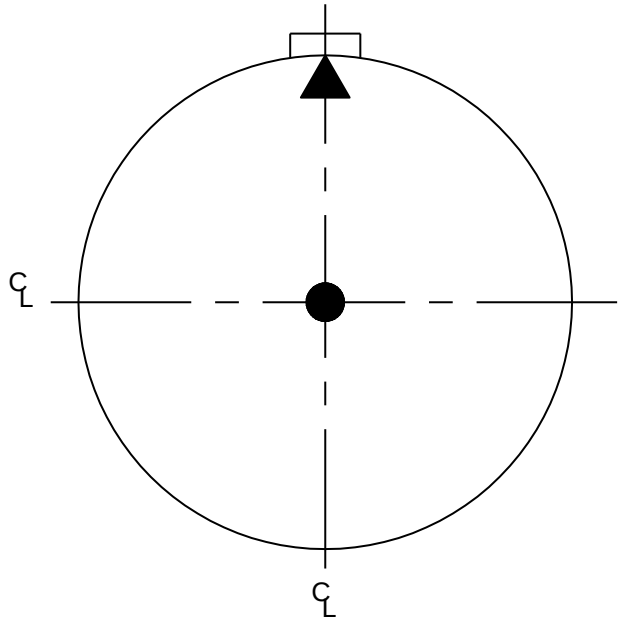

14S-4 and 15-4

(Inactive for new design after 13 May 1954 for SAE-AS50151 and MIL-DTL-83723 series II. Active for new design for SAE-AS95234.)

Contacts (Insert arrangements 14S-4, 15-4)		
Contact position identification (ID)	Contact location	
	X-axis (mm)	Y-axis (mm)
Not applicable	+.000 (0.00)	+.000 (0.00)

Shell size	Arrangement number	Number of contacts	Size contacts **(see note)**	Service rating	Contact location	Supersedes
14S	-4	1	16S **(socket)** **16 (socket)** **16 (pin)**	D	All	MS33682-4
15	-4	1	16	D	All	

Note: This insert arrangement has no alternate insert positions. **16S sockets (M39029/30-217) are applicable to rear release, SAE-AS50151 connectors only. Size 16 sockets (M39029/45-295) are applicable to SAE-AS95234 front release connectors.**

FIGURE 4. Insert arrangement, electrical connector, shell size 14, MIL-DTL-22992, classes C, J and R, MIL-DTL-83723, series II, SAE-AS50151, shell size 14S, SAE-AS50151 and SAE-AS95234 only, and shell size 15, MIL-DTL-83723 only – Continued.

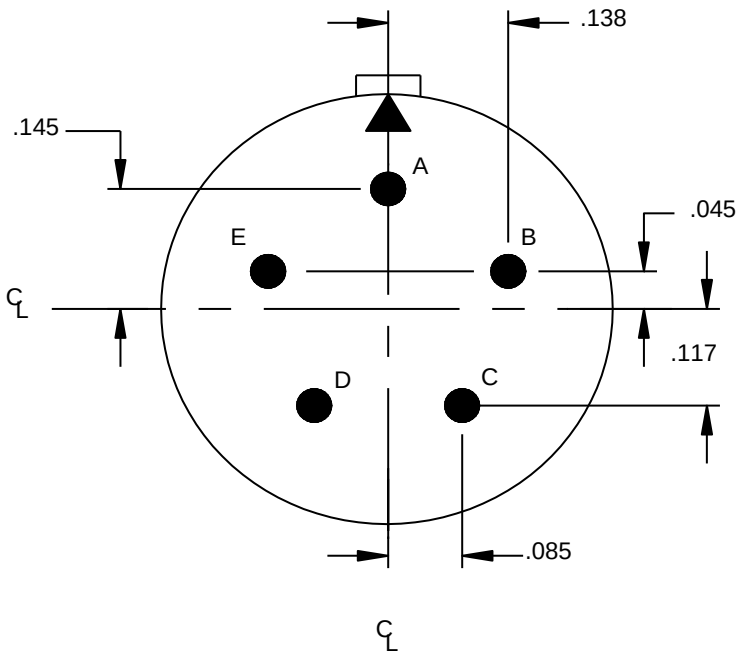

14S-5 and 15-5

(~~Not~~ **Insert arrangement 14S-5 a**pplicable to SAE-AS95234.)

Contacts (Insert arrangements 14S-5 and 15-5)		
Contact position identification (ID)	Contact location	
	X-axis (mm)	Y-axis (mm)
A	+.000 (0.00)	+.145 (3.68)
B	+.138 (3.51)	+.045 (1.14)
C	+.085 (2.16)	-.117 (2.97)
D	-.085 (2.16)	-.117 (2.97)
E	-.138 (3.51)	+.045 (1.14)

Shell size	Arrangement number	Number of contacts	Size contacts **(see note)**	Service rating	Contact location	Supersedes
14S	-5	5	16S **(socket)** **16 (socket)** **16 (pin)**	INST	All	MS33682-5
15	-5	5	16	INST	All	

Note: 16S sockets (M39029/30-217) are applicable to rear release, SAE-AS50151 connectors only. Size 16 sockets (M39029/45-295) are applicable to SAE-AS95234 front release connectors.

Alternate insert positions			
A degrees (A°)			
W	X	Y	Z
---	110	---	---

FIGURE 4. Insert arrangement, electrical connector, shell size 14, MIL-DTL-22992, classes C, J and R, MIL-DTL-83723, series II, SAE-AS50151, shell size 14S, SAE-AS50151 and SAE-AS95234 only, and shell size 15, MIL-DTL-83723 only – Continued.

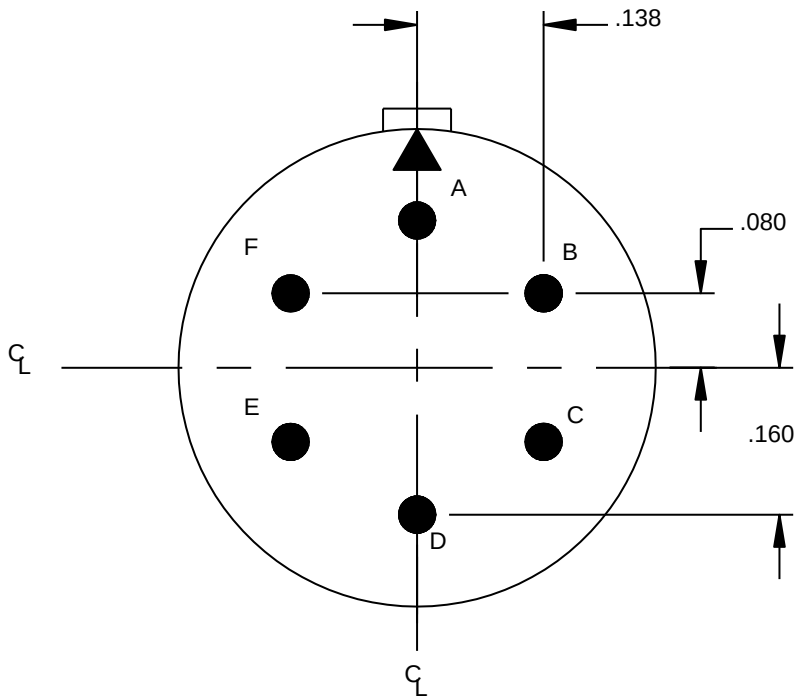

14S-6 and 15-6

(~~Not~~ **Insert arrangement 14S-6 a**pplicable to SAE-AS95234.)

Contacts (Insert arrangements 14S-6 and 15-6)		
Contact position identification (ID)	Contact location	
	X-axis (mm)	Y-axis (mm)
A	+.000 (0.00)	+.160 (4.06)
B	+.138 (3.51)	+.080 (2.03)
C	+.138 (3.51)	-.080 (2.03)
D	+.000 (0.00)	-.160 (4.06)
E	-.138 (3.51)	-.080 (2.03)
F	-.138 (3.51)	+.080 (2.03)

Shell size	Arrangement number	Number of contacts	Size contacts **(see note)**	Service rating	Contact location	Supersedes
14S	-6	6	16S **(socket)** **16 (socket)** **16 (pin)**	INST	All	MS33682-6
15	-6	6	16	INST	All	

Note: This insert arrangement has no alternate insert positions. **16S sockets (M39029/30-217) are applicable to rear release, SAE-AS50151 connectors only. Size 16 sockets (M39029/45-295) are applicable to SAE-AS95234 front release connectors.**

FIGURE 4. Insert arrangement, electrical connector, shell size 14, MIL-DTL-22992, classes C, J and R, MIL-DTL-83723, series II, SAE-AS50151, shell size 14S, SAE-AS50151 and SAE-AS95234 only, and shell size 15, MIL-DTL-83723 only – Continued.

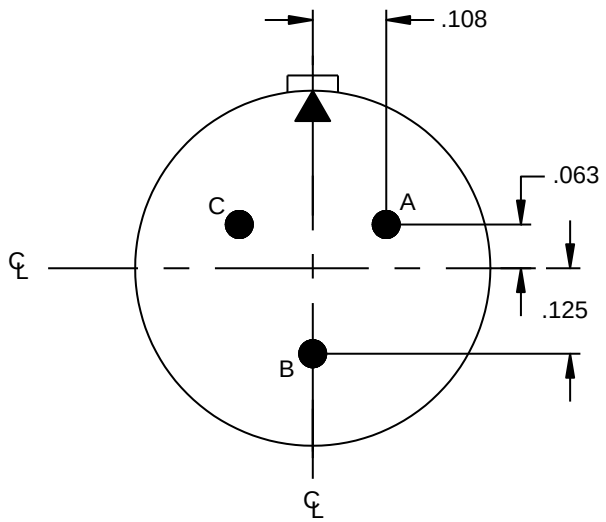

14S-7 and 15-7

Contacts (Insert Arrangements 14S-7 and 15-7)		
Contact position identification (ID)	Contact location	
	X-axis (mm)	Y-axis (mm)
A	+.108 (2.74)	+.063 (1.60)
B	+.000 (0.00)	-.125 (3.18)
C	-.108 (2.74)	+.063 (1.60)

Shell size	Arrangement number	Number of contacts	Size contacts **(see note)**	Service rating	Contact location	Supersedes
14S	-7	3	16S **(socket)** **16 (socket)** **16 (pin)**	A	All	MS33682-7
15	-7	3	16	A	All	

Note: 16S sockets (M39029/30-217) are applicable to rear release, SAE-AS50151 connectors only. Size 16 sockets (M39029/45-295) are applicable to SAE-AS95234 front release connectors.

Alternate insert positions				
A degrees (A°)				
W	X	Y	Z	
90	180	270	---	

FIGURE 4. Insert arrangement, electrical connector, shell size 14, MIL-DTL-22992, classes C, J and R, MIL-DTL-83723, series II, SAE-AS50151, shell size 14S, SAE-AS50151 and SAE-AS95234 only, and shell size 15, MIL-DTL-83723 only – Continued.

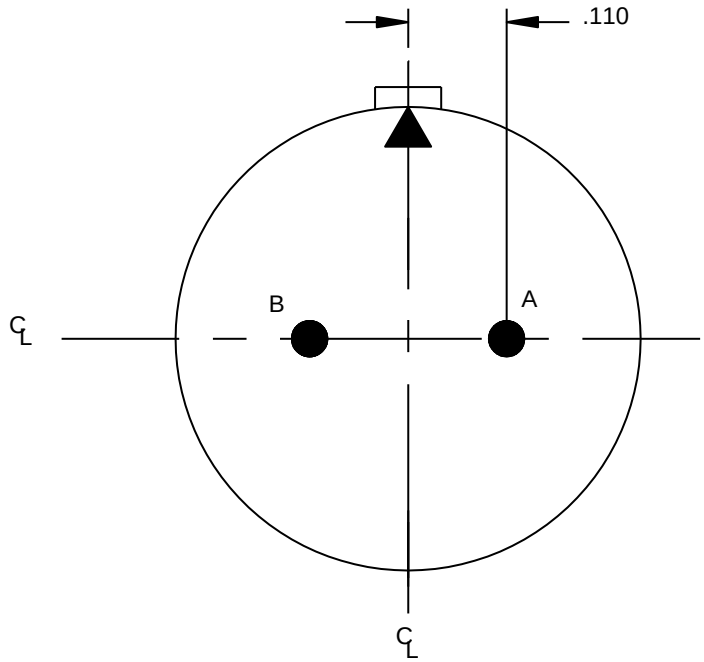

14S-9 and 15-9

(~~Not~~ **Insert arrangement 14S-9 a**pplicable to SAE-AS95234.)

Contacts (Insert arrangements 14S-9 and 15-9)		
Contact position identification (ID)	Contact location	
	X-axis (mm)	Y-axis (mm)
A	+.110 (2.79)	+.000 (0.00)
B	-.110 (2.79)	-.000 (0.00)

Shell size	Arrangement number	Number of contacts	Size contacts **(see note)**	Service rating	Contact location	Supersedes
14S	-9	2	16S **(socket)** **16 (socket)** **16 (pin)**	A	All	MS33682-9
15	-9	2	16	A	All	

Note: 16S sockets (M39029/30-217) are applicable to rear release, SAE-AS50151 connectors only. Size 16 sockets (M39029/45-295) are applicable to SAE-AS95234 front release connectors.

Alternate insert positions			
A degrees (A°)			
W	X	Y	Z
70	145	215	290

FIGURE 4. Insert arrangement, electrical connector, shell size 14, MIL-DTL-22992, classes C, J and R, MIL-DTL-83723, series II, SAE-AS50151, shell size 14S, SAE-AS50151 and SAE-AS95234 only, and shell size 15, MIL-DTL-83723 only – Continued.

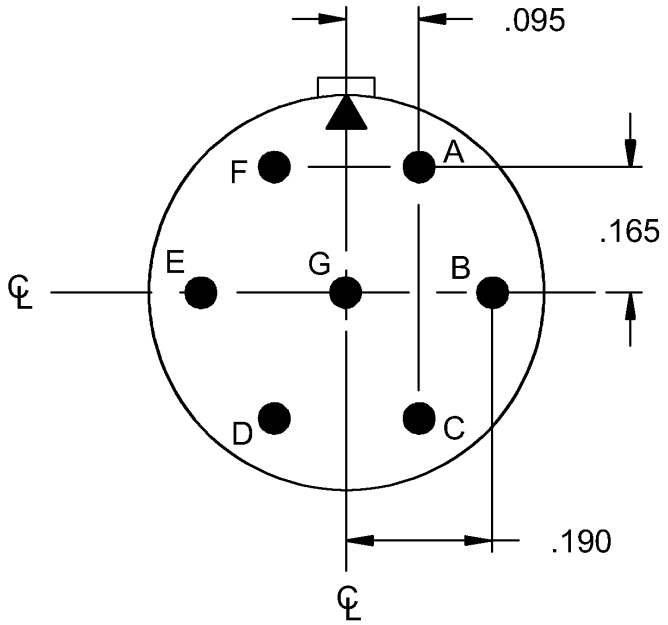

16S-1 and 17-1

Contacts (Insert arrangements 16S-1 and 17-1)		
Contact position identification (ID)	Contact location	
	X-axis (mm)	Y-axis (mm)
A	+.095 (2.41)	+.165 (4.19)
B	+.190 (4.83)	+.000 (0.00)
C	+.095 (2.41)	-.165 (4.19)
D	-.095 (2.41)	-.165 (4.19)
E	-.190 (4.83)	+.000 (0.00)
F	-.095 (2.41)	+.165 (4.19)
G	+.000 (0.00)	+.000 (0.00)

Shell sizes	Arrangement number	Number of contacts	Size contacts **(see note)**	Service rating	Contact location	Supersedes
16S	-1	7	16S **(socket)** **16 (socket)** **16 (pin)**	A	All	MS33683-1
17	-1	7	16	A	All	

Note: 16S sockets (M39029/30-217) are applicable to rear release, SAE-AS50151 connectors only. Size 16 sockets (M39029/45-295) are applicable to SAE-AS95234 front release connectors.

Alternate insert positions			
A degrees (A°)			
W	X	Y	Z
80	---	---	280

FIGURE 5. Insert arrangement, electrical connector, shell size 16, MIL-DTL-22992, classes C, J and R, MIL-DTL-83723, series II, SAE-AS50151 and SAE-AS95234, shell size 16S, SAE-AS50151 and SAE-AS95234 only, and shell size 17, MIL-DTL-83723 only.

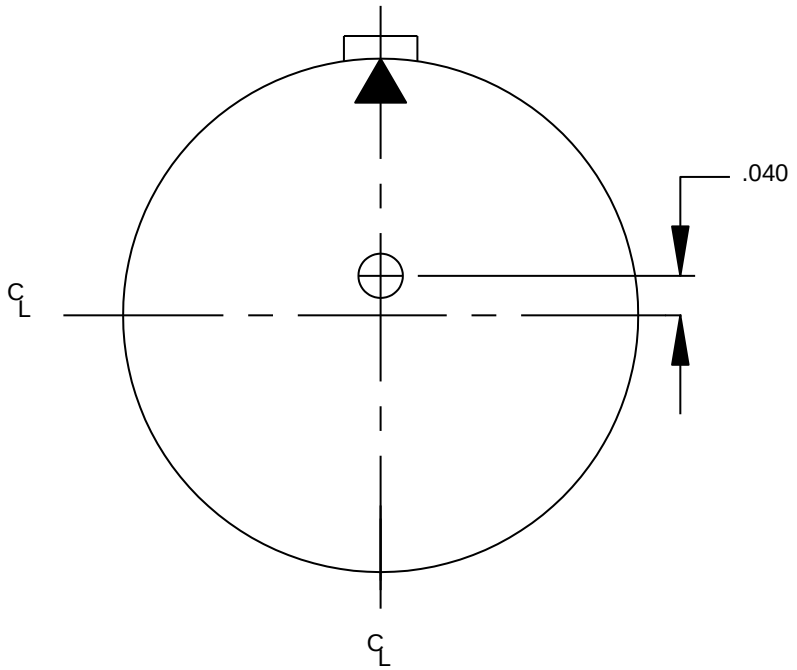

16-2

(Not applicable to SAE-AS95234.)

Contacts (Insert arrangement 16-2)		
Contact position identification (ID)	Contact location	
	X-axis (mm)	Y-axis (mm)
A	+.000 (0.00)	+.040 (10.16)

Shell size	Arrangement number	Number of contacts	Size contacts	Service rating	Contact location	Supersedes
16	-2	1	12	E	All	MS33683-2

Note: This insert arrangement has no alternate insert positions.

FIGURE 5. Insert arrangement, electrical connector, shell size 16, MIL-DTL-22992, classes C, J and R, MIL-DTL-83723, series II, SAE-AS50151 and SAE-AS95234, shell size 16S, SAE-AS50151 and SAE-AS95234 only, and shell size 17, MIL-DTL-83723 only – Continued.

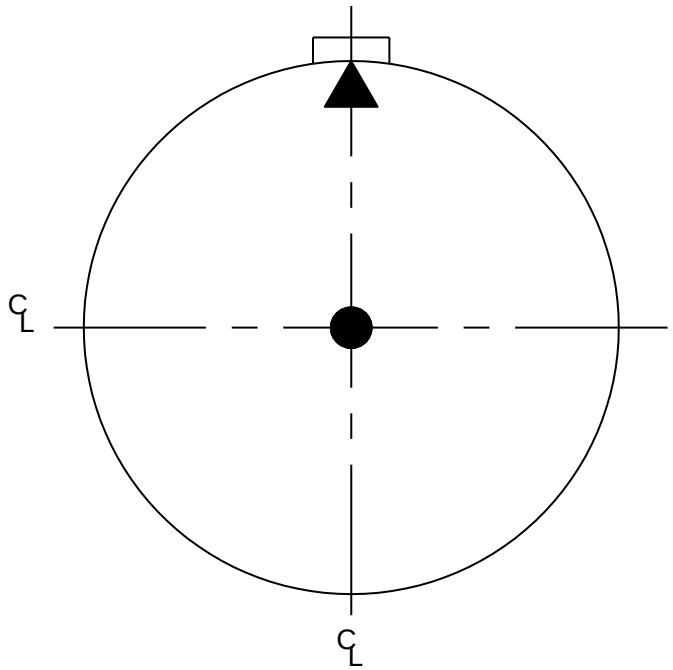

16S-3 and 17-3

(~~Not~~ **Insert arrangement 16S-3 a**pplicable to SAE-AS95234.)

Contacts (Insert arrangements 16S-3 and 17-3)		
Contact position identification (ID)	Contact location	
	X-axis (mm)	Y-axis (mm)
Not applicable	+.000 (0.00)	+.000 (0.00)

Shell size	Arrangement number	Number of contacts	Size contacts **(see note)**	Service rating	Contact location	Supersedes
16S	-3	1	16S **(socket)** **16 (socket)** **16 (pin)**	B	All	MS33683-3
17	-3	1	16	B	All	

Note: This insert arrangement has no alternate insert positions. **16S sockets (M39029/30-217) are applicable to rear release, SAE-AS50151 connectors only. Size 16 sockets (M39029/45-295) are applicable to SAE-AS95234 front release connectors.**

FIGURE 5. Insert arrangement, electrical connector, shell size 16, MIL-DTL-22992, classes C, J and R, MIL-DTL-83723, series II, SAE-AS50151 and SAE-AS95234, shell size 16S, SAE-AS50151 and SAE-AS95234 only, and shell size 17, MIL-DTL-83723 only – Continued.

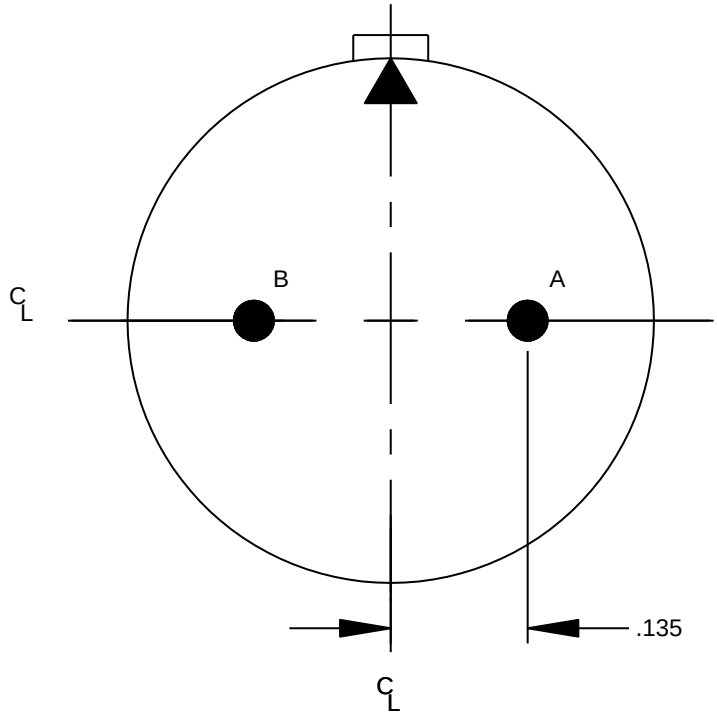

16S-4 and 17-4

(~~Not~~ **Insert arrangement 16S-4 a**pplicable to SAE-AS95234.)

Contacts (Insert arrangements 16S-4 and 17-4)		
Contact position identification (ID)	Contact location	
	X-axis (mm)	Y-axis (mm)
A	+.135 (3.43)	+.000 (0.00)
B	-.135 (3.43)	+.000 (0.00)

Shell size	Arrangement number	Number of contacts	Size contacts **(see note)**	Service rating	Contact location	Supersedes
16S	-4	2	16S **(socket)** **16 (socket)** **16 (pin)**	D	All	MS33683-4
17	-4	2	16	D	All	

Note: 16S sockets (M39029/30-217) are applicable to rear release, SAE-AS50151 connectors only. Size 16 sockets (M39029/45-295) are applicable to SAE-AS95234 front release connectors.

Alternate insert positions			
A degrees (A°)			
W	X	Y	Z
35	110	250	325

FIGURE 5. Insert arrangement, electrical connector, shell size 16, MIL-DTL-22992, classes C, J and R, MIL-DTL-83723, series II, SAE-AS50151 and SAE-AS95234, shell size 16S, SAE-AS50151 and SAE-AS95234 only, and shell size 17, MIL-DTL-83723 only – Continued.

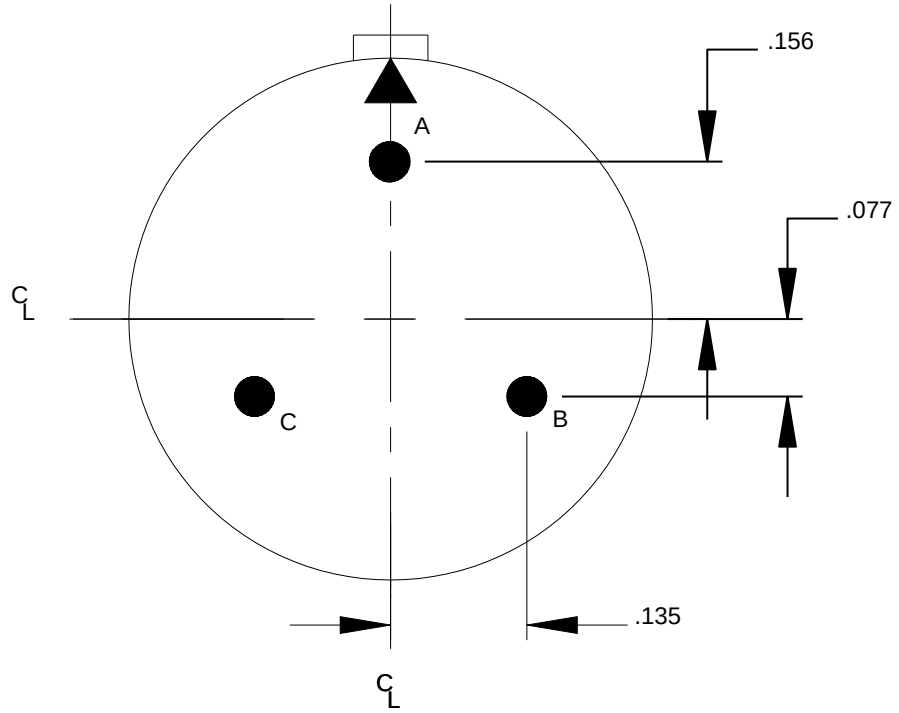

16S-5 and 17-5

(Inactive for New Design after 13 May 1954.)

(Not applicable to SAE-AS95234.)

Contacts (Insert arrangements 16S-5 and 17-5)		
Contact position identification (ID)	Contact location	
	X-axis (mm)	Y-axis (mm)
A	+.000 (0.00)	+.156 (3.96)
B	+.135 (3.43)	-.077 (1.96)
C	-.135 (3.43)	-.077 (1.96)

Shell size	Arrangement number	Number of contacts	Size contacts	Service rating	Contact location	Supersedes
16S	-5	3	16S **(socket)** **16 (pin)**	A	All	MS33683-5
17	-5	3	16	A	All	

Alternate insert positions			
A degrees (A°)			
W	X	Y	Z
70	145	215	290

FIGURE 5. Insert arrangement, electrical connector, shell size 16, MIL-DTL-22992, classes C, J and R, MIL-DTL-83723, series II, SAE-AS50151 and SAE-AS95234, shell size 16S, SAE-AS50151 and SAE-AS95234 only, and shell size 17, MIL-DTL-83723 only – Continued.

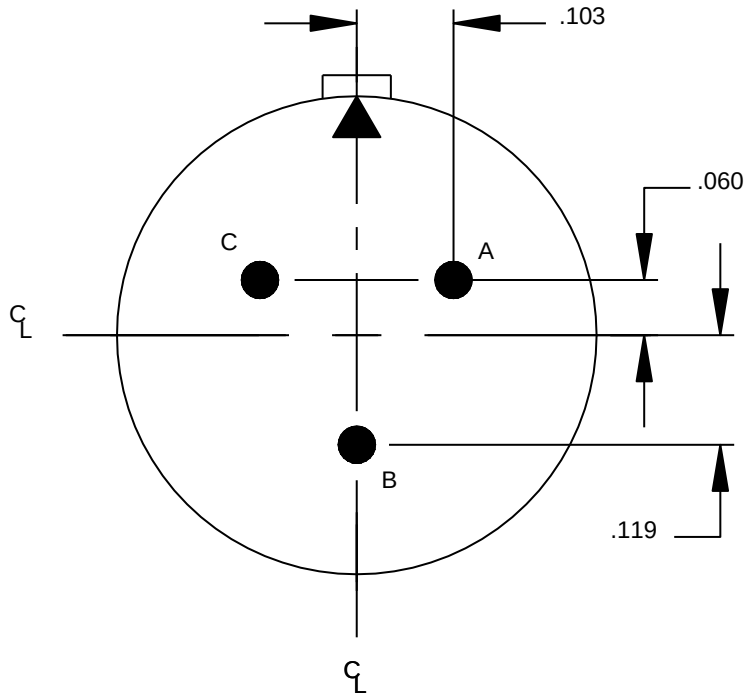

16S-6 and 17-6

(Inactive for New Design after 30 July 1951.)

(Not applicable to SAE-AS95234.)

Contacts (Insert arrangements 16S-6 and 17-6)		
Contact position identification (ID)	Contact location	
	X-axis (mm)	Y-axis (mm)
A	+.103 (2.62)	+.060 (1.52)
B	+.000 (0.00)	-.119 (3.02)
C	-.103 (2.62)	+.060 (1.52)

Shell size	Arrangement number	Number of contacts	Size contacts	Service rating	Contact location	Supersedes
16S	-6	3	16S **(socket)** **16 (pin)**	A	All	MS33683-6
17	-6	3	16	A	All	

Alternate insert positions			
A degrees (A°)			
W	X	Y	Z
90	180	270	---

FIGURE 5. Insert arrangement, electrical connector, shell size 16, MIL-DTL-22992, classes C, J and R, MIL-DTL-83723, series II, SAE-AS50151 and SAE-AS95234, shell size 16S, SAE-AS50151 and SAE-AS95234 only, and shell size 17, MIL-DTL-83723 only – Continued.

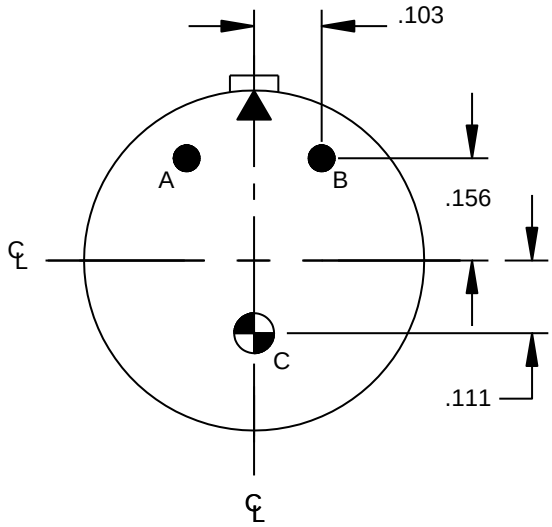

16-7

(Not applicable to SAE-AS95234.)

Contacts (Insert arrangement 16-7)		
Contact position identification (ID)	Contact location	
	X-axis (mm)	Y-axis (mm)
A	-.103 (2.62)	+.156 (3.96)
B	+.103 (2.62)	+.156 (3.96)
C	+.000 (0.00)	-.111 (2.82)

Shell size	Arrangement number	Number of contacts	Size contacts	Service rating	Contact location	Supersedes
16	-7	2	16	A	A,B	MS33683-7
		1	8		C	

Alternate insert positions			
A degrees (A°)			
W	X	Y	Z
80	110	250	280

FIGURE 5. Insert arrangement, electrical connector, shell size 16, MIL-DTL-22992, classes C, J and R, MIL-DTL-83723, series II, SAE-AS50151 and SAE-AS95234, shell size 16S, SAE-AS50151 and SAE-AS95234 only, and shell size 17, MIL-DTL-83723 only – Continued.

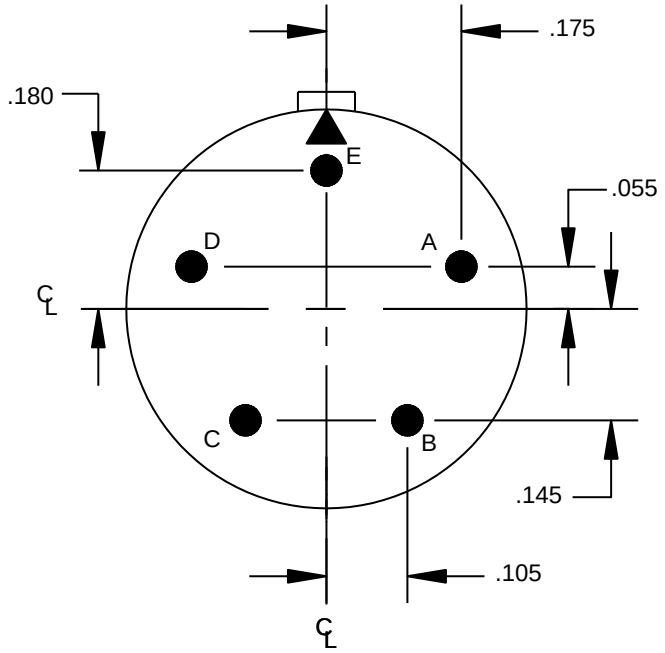

16S-8 and 17-8

(Not applicable to SAE-AS95234.)

Contacts (Insert arrangements 16S-8 and 17-8)		
Contact position identification (ID)	Contact location	
	X-axis (mm)	Y-axis (mm)
A	+.175 (4.45)	+.055 (1.40)
B	+.105 (2.67)	-.145 (3.68)
C	-.105 (2.67)	-.145 (3.68)
D	-.175 (4.45)	+.055 (1.40)
E	+.000 (0.00)	+.180 (4.47)

Shell size	Arrangement number	Number of contacts	Size contacts	Service rating	Contact location	Supersedes
16S	-8	5	16S **(socket)** **16 (pin)**	A	All	MS33683-8
17	-8	5	16	A	All	

Alternate insert positions			
A degrees (A°)			
W	X	Y	Z
---	170	265	---

FIGURE 5. Insert arrangement, electrical connector, shell size 16, MIL-DTL-22992, classes C, J and R, MIL-DTL-83723, series II, SAE-AS50151 and SAE-AS95234, shell size 16S, SAE-AS50151 and SAE-AS95234 only, and shell size 17, MIL-DTL-83723 only – Continued.

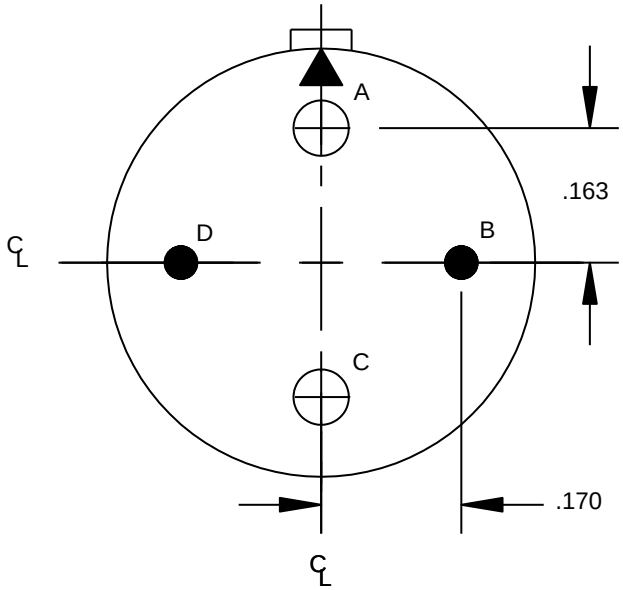

16-9

Contacts (Insert arrangement 16-9)		
Contact position identification (ID)	Contact location	
	X-axis (mm)	Y-axis (mm)
A	+.000 (0.00)	+.163 (4.14)
B	+.170 (4.32)	+.000 (0.00)
C	+.000 (0.00)	-.163 (4.14)
D	-.170 (4.32)	+.000 (0.00)

Shell size	Arrangement number	Number of contacts	Size contacts	Service rating	Contact location	Supersedes
16	-9	2	16	A	All	MS33683-9
		2	12			

Alternate insert positions			
A degrees (A°)			
W	X	Y	Z
35	110	250	325

FIGURE 5. Insert arrangement, electrical connector, shell size 16, MIL-DTL-22992, classes C, J and R, MIL-DTL-83723, series II, SAE-AS50151 and SAE-AS95234, shell size 16S, SAE-AS50151 and SAE-AS95234 only, and shell size 17, MIL-DTL-83723 only – Continued.

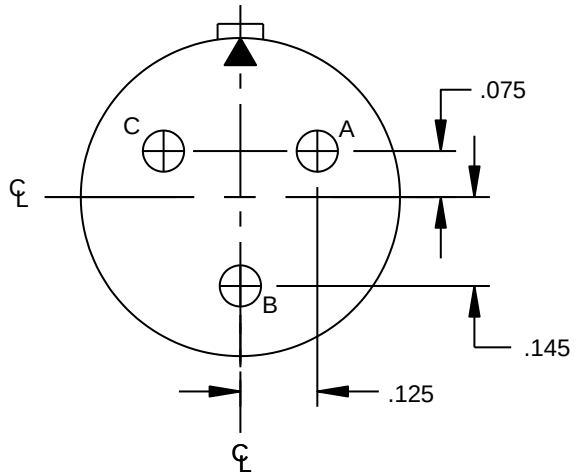

16-10

Contacts (Insert arrangement 16-10)		
Contact position identification (ID)	Contact location	
	X-axis (mm)	Y-axis (mm)
A	+.125 (3.18)	+.075 (1.91)
B	+.000 (0.00)	-.145 (3.68)
C	-.125 (3.18)	+.075 (1.91)

Shell size	Arrangement number	Number of contacts	Size contacts	Service rating	Contact location	Supersedes
16	-10	3	12	A	All	MS33683-10

Alternate insert positions			
A degrees (A°)			
W	X	Y	Z
90	180	270	---

FIGURE 5. Insert arrangement, electrical connector, shell size 16, MIL-DTL-22992, classes C, J and R, MIL-DTL-83723, series II, SAE-AS50151 and SAE-AS95234, shell size 16S, SAE-AS50151 and SAE-AS95234 only, and shell size 17, MIL-DTL-83723 only – Continued.

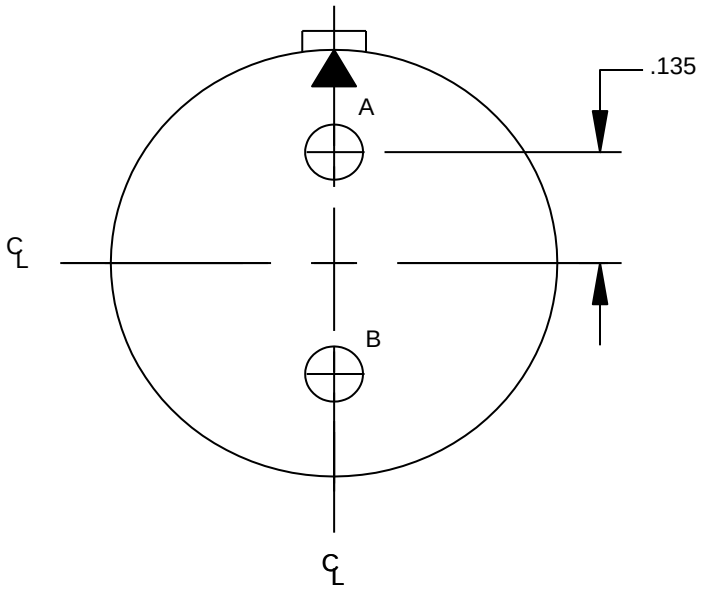

16-11

Contacts (Insert arrangement 16-11)		
Contact position identification (ID)	Contact location	
	X-axis (mm)	Y-axis (mm)
A	+.000 (0.00)	+.135 (3.43)
B	+.000 (0.00)	-.135 (3.43)

Shell size	Arrangement number	Number of contacts	Size contacts	Service rating	Contact location	Supersedes
16	-11	2	12	A	All	MS33683-11

Alternate insert positions			
A degrees (A°)			
W	X	Y	Z
35	110	250	325

FIGURE 5. Insert arrangement, electrical connector, shell size 16, MIL-DTL-22992, classes C, J and R, MIL-DTL-83723, series II, SAE-AS50151 and SAE-AS95234, shell size 16S, SAE-AS50151 and SAE-AS95234 only, and shell size 17, MIL-DTL-83723 only – Continued.

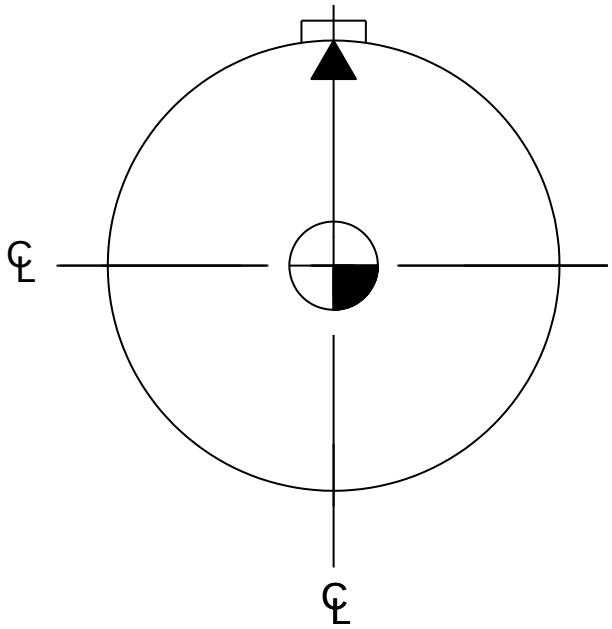

16-12

(Not applicable to SAE-AS95234.)

Contacts (Insert arrangement 16-12)		
Contact position identification (ID)	Contact location	
	X-axis (mm)	Y-axis (mm)
Not applicable	+.000 (0.00)	+.000 (0.00)

Shell size	Arrangement number	Number of contacts	Size contacts	Service rating	Contact location	Supersedes
16	-12	1	4	A	All	MS33683-12

Note: This insert arrangement has no alternate insert positions.

FIGURE 5. Insert arrangement, electrical connector, shell size 16, MIL-DTL-22992, classes C, J and R, MIL-DTL-83723, series II, SAE-AS50151 and SAE-AS95234, shell size 16S, SAE-AS50151 and SAE-AS95234 only, and shell size 17, MIL-DTL-83723 only – Continued.

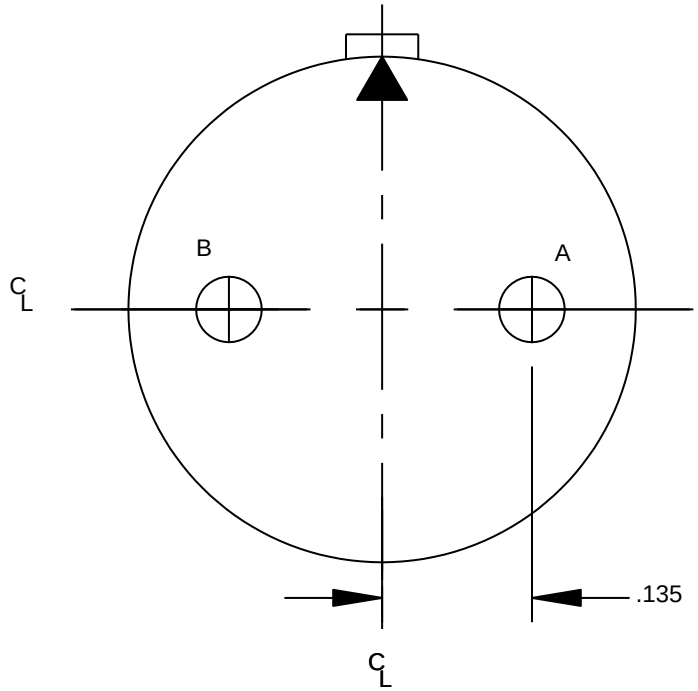

16-13

CONTACT A – IRON
CONTACT B- COPPER-NICKEL ALLOY

(Not applicable to SAE-AS95234.)

Contacts (Insert arrangement 16-13)		
Contact position identification (ID)	Contact location	
	X-axis (mm)	Y-axis (mm)
A	+.135 (3.43)	+.000 (0.00)
B	-.135 (3.43)	+.000 (0.00)

Shell size	Arrangement number	Number of contacts	Size contacts	Service rating	Contact location	Supersedes
16	-13	2	12	A	All	MS33683-13

Alternate insert positions			
A degrees (A°)			
W	X	Y	Z
35	110	250	325

FIGURE 5. Insert arrangement, electrical connector, shell size 16, MIL-DTL-22992, classes C, J and R, MIL-DTL-83723, series II, SAE-AS50151 and SAE-AS95234, shell size 16S, SAE-AS50151 and SAE-AS95234 only, and shell size 17, MIL-DTL-83723 only – Continued.

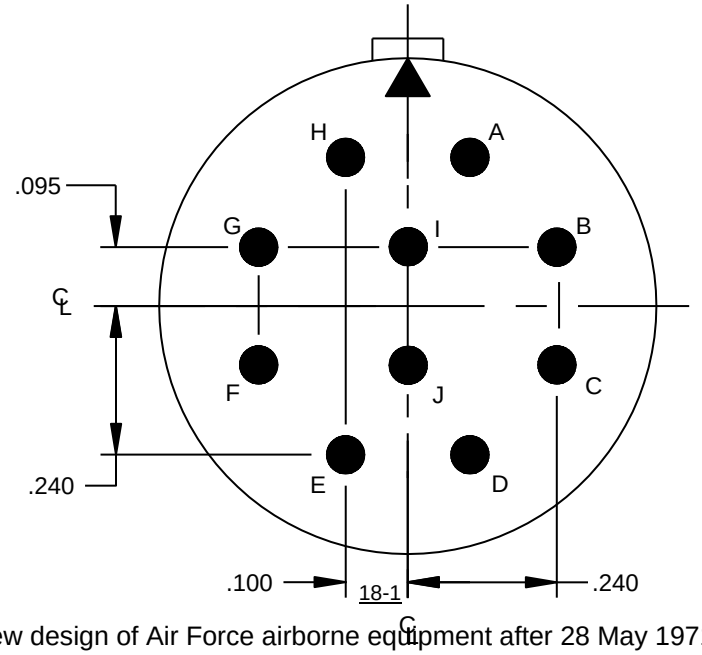

(Inactive for new design of Air Force airborne equipment after 28 May 1971 for SAE-AS50151 and MIL-DTL-83723 series II. Active for new design for SAE-AS95234.)

Contacts (Insert arrangement 18-1)		
Contact position identification (ID)	Contact location	
	X-axis (mm)	Y-axis (mm)
A	+.100 (2.54)	+.240 (6.10)
B	+.240 (6.10)	+.095 (2.41)
C	+.240 (6.10)	-.095 (2.41)
D	+.100 (2.54)	-.240 (6.10)
E	-.100 (2.54)	-.240 (6.10)
F	-.240 (6.10)	-.095 (2.41)
G	-.240 (6.10)	+.095 (2.41)
H	-.100 (2.54)	+.240 (6.10)
I	+.000 (0.00)	+.095 (2.41)
J	+.000 (0.00)	-.095 (2.41)

Shell size	Arrangement number	Number of contacts	Size contacts	Service rating	Contact location	Supersedes
18	-1	4	16	A	B, C, F, G	MS33684-1
		6		INST	All others	

Alternate insert positions			
A degrees (A°)			
W	X	Y	Z
70	145	215	290

FIGURE 6. Insert arrangement, electrical connector, shell size 18, MIL-DTL-22992, classes C, J and R, MIL-DTL-83723, series II, SAE-AS50151 and SAE-AS95234.

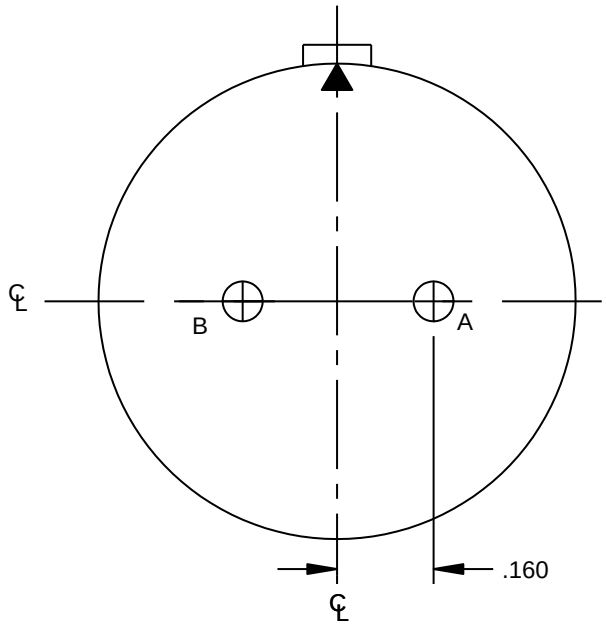

18-3

(Inactive for New Design after 13 May 1954 for SAE-AS50151
and MIL-DTL-83723 series II. Active for new design for SAE-AS95234.)

(Not applicable to MIL-DTL-22992.)

Contacts (Insert arrangement 18-3)		
Contact position identification (ID)	Contact location	
	X-axis (mm)	Y-axis (mm)
A	+.160 (4.06)	+.000 (0.00)
B	-.160 (4.06)	+.000 (0.00)

Shell size	Arrangement number	Number of contacts	Size contacts	Service rating	Contact location	Supersedes
18	-3	2	12	D	All	MS33684-3

Alternate insert positions			
A degrees (A°)			
W	X	Y	Z
35	110	250	325

FIGURE 6. Insert arrangement, electrical connector, shell size 18, MIL-DTL-22992, classes C, J and R, MIL-DTL-83723, series II, SAE-AS50151 and SAE-AS95234 – Continued.

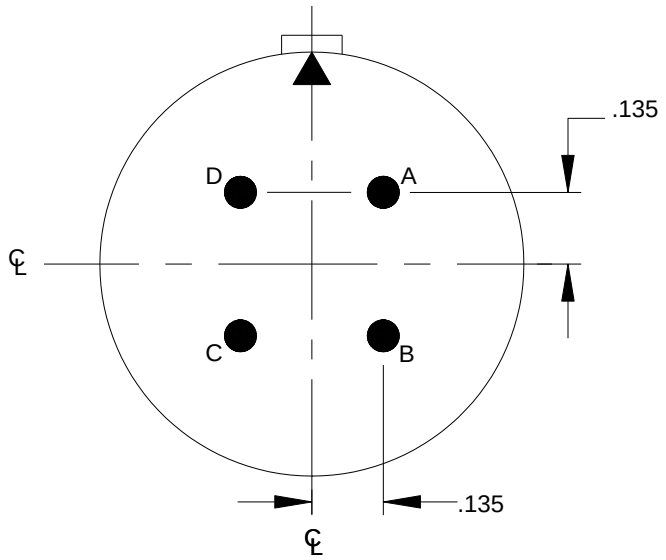

18-4

(Inactive for New Design of Air Force airborne equipment after 28 May 1971 for SAE-AS50151 and MIL-DTL-83723 series II. Active for new design for SAE-AS95234.)

Contacts (Insert arrangement 18-4)		
Contact position identification (ID)	Contact location	
	X-axis (mm)	Y-axis (mm)
A	+.135 (3.43)	+.135 (3.43)
B	+.135 (3.43)	-.135 (3.43)
C	-.135 (3.43)	-.135 (3.43)
D	-.135 (3.43)	+.135 (3.43)

Shell size	Arrangement number	Number of contacts	Size contacts	Service rating	Contact location	Supersedes
18	-4	4	16	D	All	MS33684-4

Alternate insert positions			
A degrees (A°)			
W	X	Y	Z
35	110	250	325

FIGURE 6. Insert arrangement, electrical connector, shell size 18, MIL-DTL-22992, classes C, J and R, MIL-DTL-83723, series II, SAE-AS50151 and SAE-AS95234 – Continued.

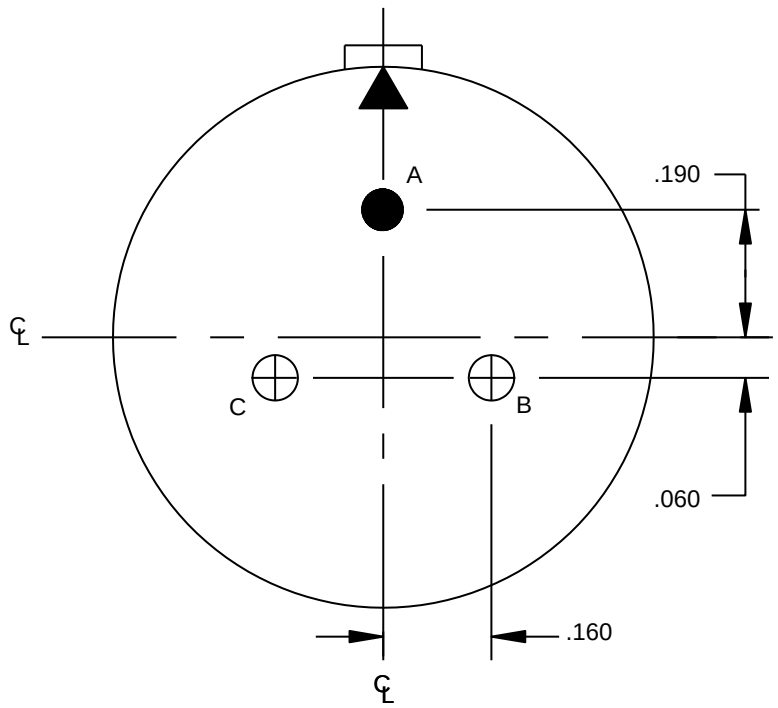

18-5

(Inactive for New Design of Air Force airborne equipment after 28 May 1971 for SAE-AS50151 and MIL-DTL-83723 series II. Active for new design for SAE-AS95234.)

Contacts (Insert arrangement 18-5)		
Contact position identification (ID)	Contact location	
	X-axis (mm)	Y-axis (mm)
A	+.000 (0.00)	+.190 (4.83)
B	+.160 (4.06)	-.060 (1.52)
C	-.160 (4.06)	-.060 (1.52)

Shell size	Arrangement number	Number of contacts	Size contacts	Service rating	Contact location	Supersedes
18	-5	1	16	D	All	MS33684-5
		2	12			

Alternate insert positions			
A degrees (A°)			
W	X	Y	Z
80	110	250	280

FIGURE 6. Insert arrangement, electrical connector, shell size 18, MIL-DTL-22992, classes C, J and R, MIL-DTL-83723, series II, SAE-AS50151 and SAE-AS95234 – Continued.

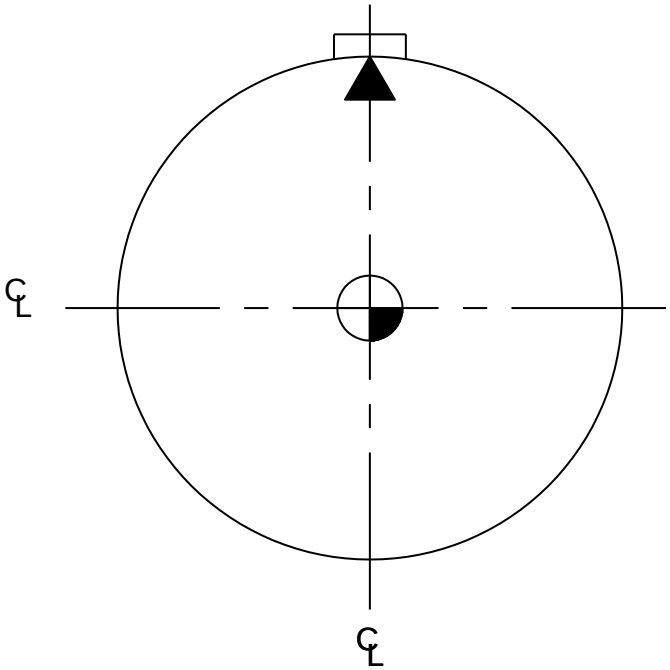

18-6

(Not applicable to SAE-AS95234.)

Contacts (Insert arrangement 18-6)		
Contact position identification (ID)	Contact location	
	X-axis (mm)	Y-axis (mm)
Not applicable	+.000 (0.00)	+.000 (0.00)

Shell size	Arrangement number	Number of contacts	Size contacts	Service rating	Contact location	Supersedes
18	-6	1	4	D	All	MS33684-6

Note: This insert arrangement has no alternate insert positions.

FIGURE 6. Insert arrangement, electrical connector, shell size 18, MIL-DTL-22992, classes C, J and R, MIL-DTL-83723, series II, SAE-AS50151 and SAE-AS95234 – Continued.

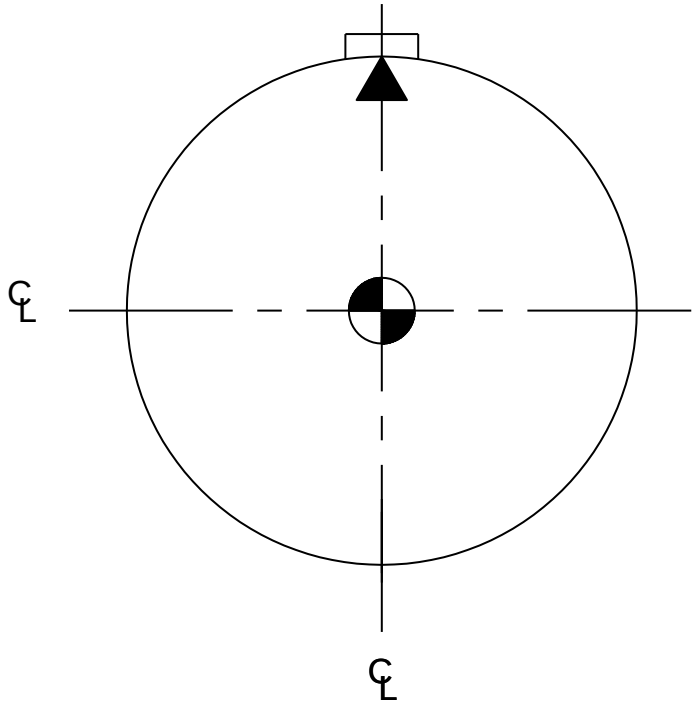

18-7

(Not applicable to SAE-AS95234.)

Contacts (Insert arrangement 18-7)		
Contact position identification (ID)	Contact location	
	X-axis (mm)	Y-axis (mm)
Not applicable.	+.000 (0.00)	+.000 (0.00)

Shell size	Arrangement number	Number of contacts	Size contacts	Service rating	Contact location	Supersedes
18	-7	1	8	B	All	MS33684-7

Note: This insert arrangement has no alternate insert positions.

FIGURE 6. Insert arrangement, electrical connector, shell size 18, MIL-DTL-22992, classes C, J and R, MIL-DTL-83723, series II, SAE-AS50151 and SAE-AS95234 – Continued.

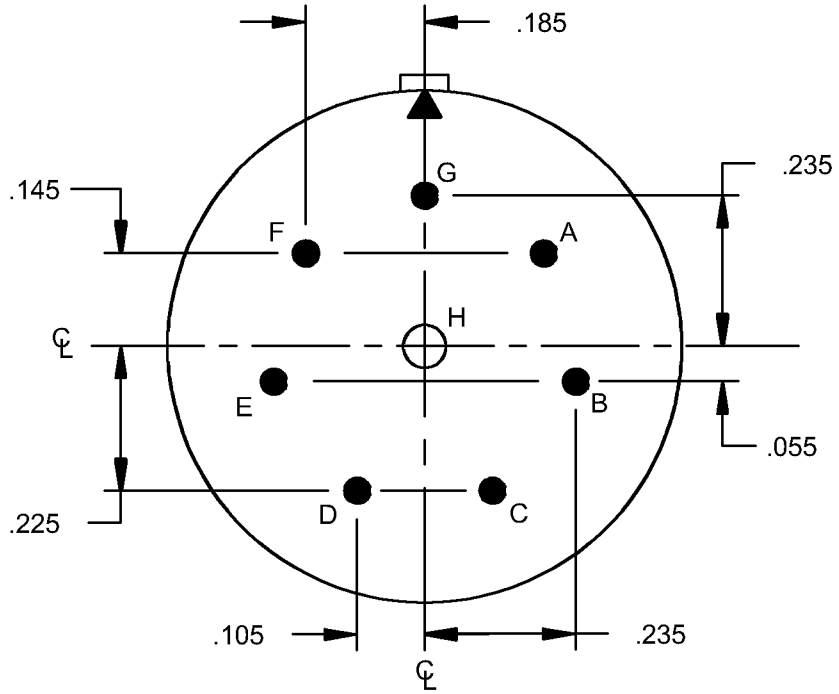

18-8

(Inactive for New Design of Air Force airborne equipment after 28 May 1971 for SAE-AS50151 and MIL-DTL-83723 series II. Active for new design for SAE-AS95234.)

Contacts (Insert arrangement 18-8)		
Contact position identification (ID)	Contact location	
	X-axis (mm)	Y-axis (mm)
A	+.185 (4.70)	+.145 (3.68)
B	+.235 (5.97)	-.055 (1.40)
C	+.105 (2.67)	-.225 (5.72)
D	-.105 (2.67)	-.225 (5.72)
E	-.235 (5.97)	-.055 (1.40)
F	-.185 (4.70)	+.145 (3.68)
G	+.000 (0.00)	+.235 (5.97)
H	+.000 (0.00)	+.000 (0.00)

Shell size	Arrangement number	Number of contacts	Size contacts	Service rating	Contact location	Supersedes
18	-8	7	16	A	All	MS33684-8
		1	12			

Alternate insert positions			
A degrees (A°)			
W	X	Y	Z
70	---	---	290

FIGURE 6. Insert arrangement, electrical connector, shell size 18, MIL-DTL-22992, classes C, J and R, MIL-DTL-83723, series II, SAE-AS50151 and SAE-AS95234 – Continued.

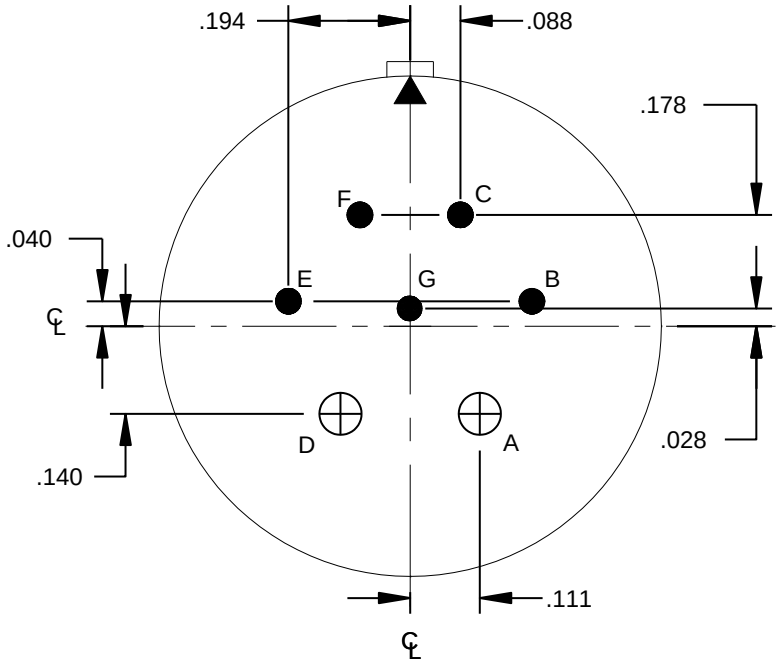

18-9

Contacts (Insert arrangement 18-9)		
Contact position identification (ID)	Contact location	
	X-axis (mm)	Y-axis (mm)
A	+.111 (2.82)	-.140 (3.56)
B	+.194 (4.93)	+.040 (1.02)
C	+.088 (2.24)	+.178 (4.52)
D	-.111 (2.82)	-.140 (3.56)
E	-.194 (4.93)	+.040 (1.02)
F	-.088 (2.24)	+.178 (4.52)
G	+.000 (0.00)	+.028 (0.71)

Shell size	Arrangement number	Number of contacts	Size contacts	Service rating	Contact location	Supersedes
18	-9	5	16	INST	B,C,E,F,G	MS33684-9
		2	12		A,D	

Alternate insert positions			
A degrees (A°)			
W	X	Y	Z
80	110	250	280

FIGURE 6. Insert arrangement, electrical connector, shell size 18, MIL-DTL-22992, classes C, J and R, MIL-DTL-83723, series II, SAE-AS50151 and SAE-AS95234 – Continued.

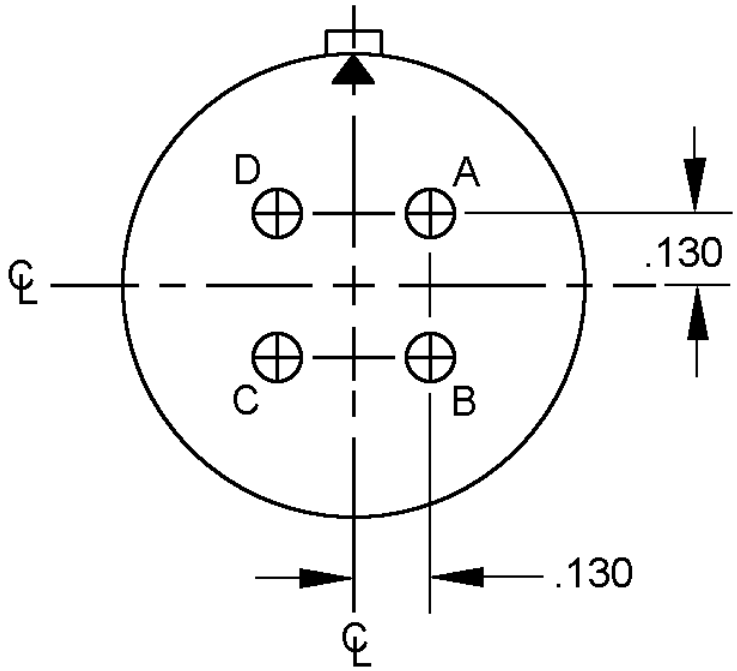

18-10

(Inactive for New Design after 13 May 1954 for SAE-AS50151 and MIL-DTL-83723 series II. Active for new design for SAE-AS95234.)

(Not applicable to MIL-DTL-22992.)

Contacts (Insert arrangement 18-10)		
Contact position identification (ID)	Contact location	
	X-axis (mm)	Y-axis (mm)
A	+.130 (3.30)	+.130 (3.30)
B	+.130 (3.30)	-.130 (3.30)
C	-.130 (3.30)	-.130 (3.30)
D	-.130 (3.30)	+.130 (3.30)

Shell size	Arrangement number	Number of contacts	Size contacts	Service rating	Contact location	Supersedes
18	-10	4	12	A	All	MS33684-10

Alternate insert positions			
A degrees (A°)			
W	X	Y	Z
---	120	240	---

FIGURE 6. Insert arrangement, electrical connector, shell size 18, MIL-DTL-22992, classes C, J and R, MIL-DTL-83723, series II, SAE-AS50151 and SAE-AS95234 – Continued.

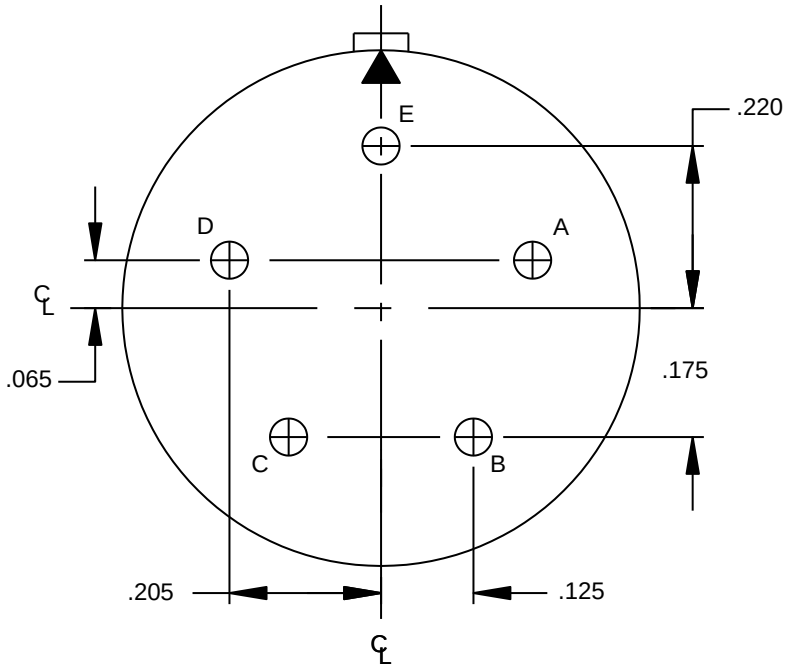

18-11

(Inactive for New Design of Air Force airborne equipment after 28 May 1971 for SAE-AS50151 and MIL-DTL-83723 series II. Active for new design for SAE-AS95234.)

Contacts (Insert arrangement 18-11)		
Contact position identification (ID)	Contact location	
	X-axis (mm)	Y-axis (mm)
A	+.205 (5.21)	+.065 (1.65)
B	+.125 (3.18)	-.175 (4.45)
C	-.125 (3.18)	-.175 (4.45)
D	-.205 (5.21)	+.065 (1.65)
E	+.000 (0.00)	+.220 (5.59)

Shell size	Arrangement number	Number of contacts	Size contacts	Service rating	Contact location	Supersedes
18	-11	5	12	A	All	MS33684-11

Alternate insert positions			
A degrees (A°)			
W	X	Y	Z
---	170	265	---

FIGURE 6. Insert arrangement, electrical connector, shell size 18, MIL-DTL-22992, classes C, J and R, MIL-DTL-83723, series II, SAE-AS50151 and SAE-AS95234 – Continued.

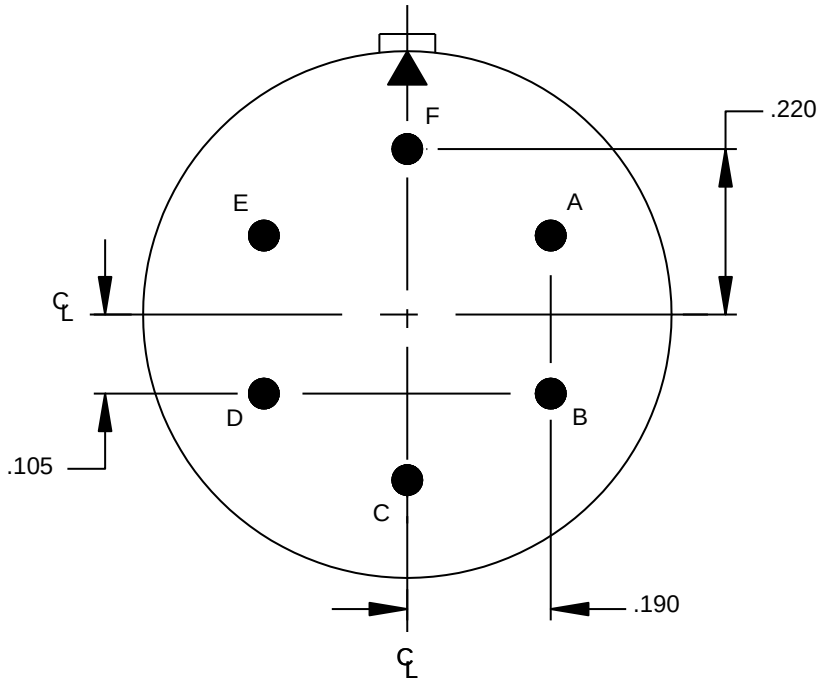

18-12

(Inactive for New Design of Air Force airborne equipment after 28 May 1971 for SAE-AS50151 and MIL-DTL-83723 series II. Active for new design for SAE-AS95234.)

Contacts (Insert arrangement 18-12)		
Contact position identification (ID)	Contact location	
	X-axis (mm)	Y-axis (mm)
A	+.190 (4.83)	+.105 (2.67)
B	+.190 (4.83)	-.105 (2.67)
C	+.000 (0.00)	-.220 (5.59)
D	-.190 (4.83)	-.105 (2.67)
E	-.190 (4.83)	+.105 (2.67)
F	+.000 (0.00)	+.220 (5.59)

Shell size	Arrangement number	Number of contacts	Size contacts	Service rating	Contact location	Supersedes
18	-12	6	16	A	All	MS33684-12

Alternate insert positions			
A degrees (A°)			
W	X	Y	Z
80	---	---	280

FIGURE 6. Insert arrangement, electrical connector, shell size 18, MIL-DTL-22992, classes C, J and R, MIL-DTL-83723, series II, SAE-AS50151 and SAE-AS95234 – Continued.

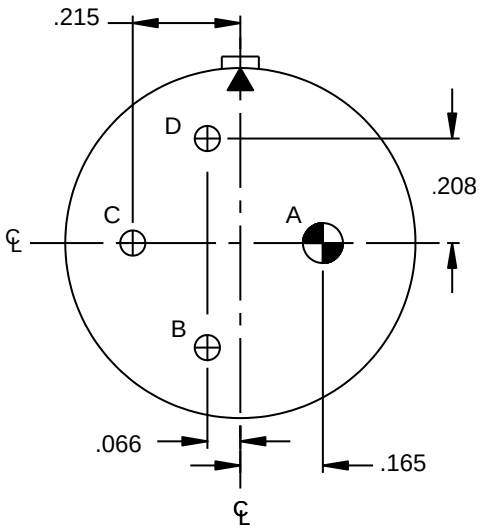

18-13

(Inactive for New Design of Air Force airborne equipment after 28 May 1971 for SAE-AS50151 and MIL-DTL-83723 series II. Active for new design for SAE-AS95234.)

Contacts (Insert arrangement 18-13)		
Contact position identification (ID)	Contact location	
	X-axis (mm)	Y-axis (mm)
A	+.165 (4.19)	+.000 (0.00)
B	- .066 (1.68)	-.208 (5.28)
C	- .215 (5.46)	+.000 (0.00)
D	- .066 (1.68)	+.208 (5.28)

Shell size	Arrangement number	Number of contacts	Size contacts	Service rating	Contact location	Supersedes
18	-13	3	12	A	All others	MS33684-13
		1	8		A	

Alternate insert positions			
A degrees (A°)			
W	X	Y	Z
80	110	250	280

FIGURE 6. Insert arrangement, electrical connector, shell size 18, MIL-DTL-22992, classes C, J and R, MIL-DTL-83723, series II, SAE-AS50151 and SAE-AS95234 – Continued.

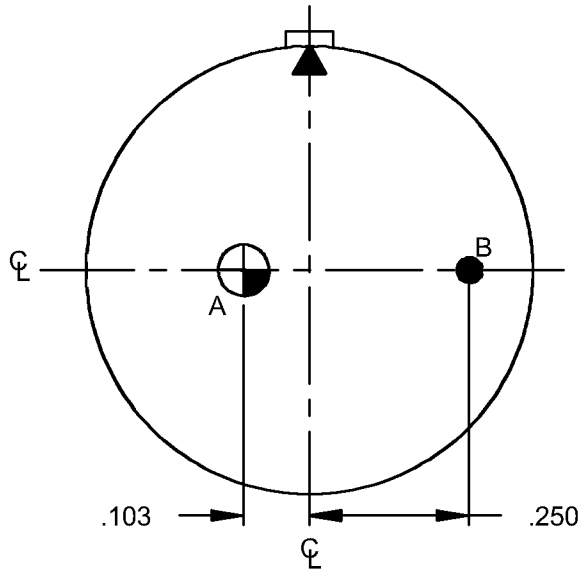

18-14

(Inactive for New Design of Air Force airborne equipment after 28 May 1971 for SAE-AS50151 and MIL-DTL-83723 series II. Active for new design for SAE-AS95234.)

Contacts (Insert arrangement 18-14)		
Contact position identification (ID)	Contact location	
	X-axis (mm)	Y-axis (mm)
A	- .103 (2.62)	+.000 (0.00)
B	+.250 (6.35)	+.000 (0.00)

Shell size	Arrangement number	Number of contacts	Size contacts	Service rating	Contact location	Supersedes
18	-14	1	16	A	All	MS33684-14
		1	4			

Alternate insert positions			
A degrees (A°)			
W	X	Y	Z
80	110	250	280

FIGURE 6. Insert arrangement, electrical connector, shell size 18, MIL-DTL-22992, classes C, J and R, MIL-DTL-83723, series II, SAE-AS50151 and SAE-AS95234 – Continued.

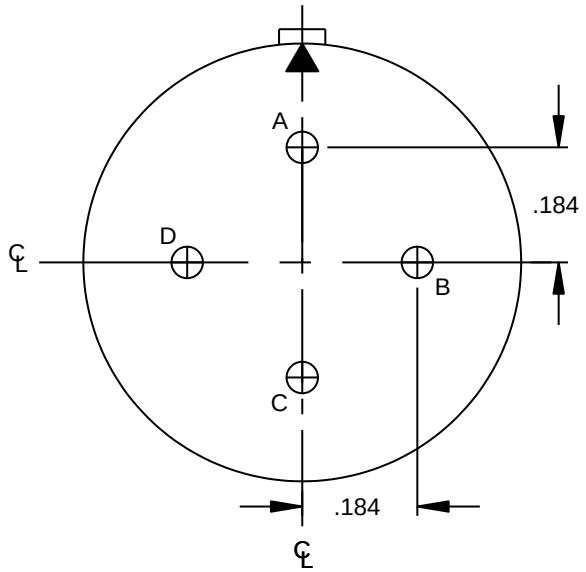

18-15

CONTACTS A AND C – IRON
CONTACTS B AND D – COPPER-NICKEL ALLOY

(Inactive for New Design of Air Force airborne equipment after 28 May 1971 for SAE-AS50151 and MIL-DTL-83723 series II. Active for new design for SAE-AS95234.)

Contacts (Insert arrangement 18-15)		
Contact position identification (ID)	Contact location	
	X-axis (mm)	Y-axis (mm)
A	+.000 (0.00)	+.184 (4.67)
B	+.184 (4.67)	+.000 (0.00)
C	+.000 (0.00)	-.184 (4.67)
D	-.184 (4.67)	+.000 (0.00)

Shell size	Arrangement number	Number of contacts	Size contacts	Service rating	Contact location	Supersedes
18	-15	4	12	A	All	MS33684-15

Alternate insert positions			
A degrees (A°)			
W	X	Y	Z
---	120	240	---

FIGURE 6. Insert arrangement, electrical connector, shell size 18, MIL-DTL-22992, classes C, J and R, MIL-DTL-83723, series II, SAE-AS50151 and SAE-AS95234 – Continued.

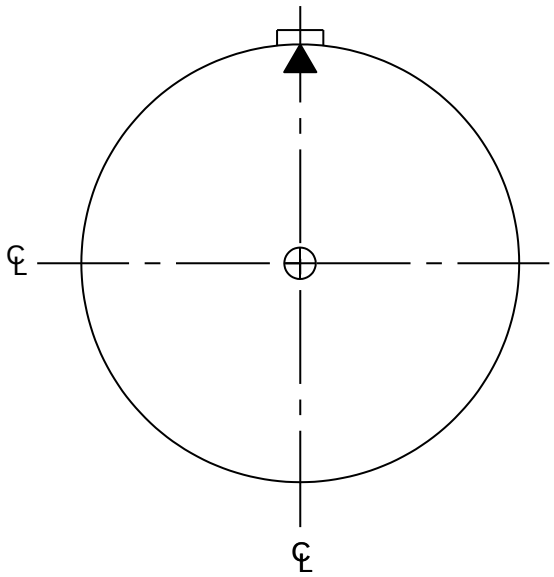

18-16

(Inactive for New Design of Air Force airborne equipment after 28 May 1971.)

(Not applicable to SAE-AS95234.)

Contacts (Insert arrangement 18-16)		
Contact position identification (ID)	Contact location	
	X-axis (mm)	Y-axis (mm)
Not applicable	+.000 (0.00)	+.000 (0.00)

Shell size	Arrangement number	Number of contacts	Size contacts	Service rating	Contact location	Supersedes
18	-16	1	12	C	All	MS33684-16

Note: This insert arrangement has no alternate insert positions.

FIGURE 6. Insert arrangement, electrical connector, shell size 18, MIL-DTL-22992, classes C, J and R, MIL-DTL-83723, series II, SAE-AS50151 and SAE-AS95234 – Continued.

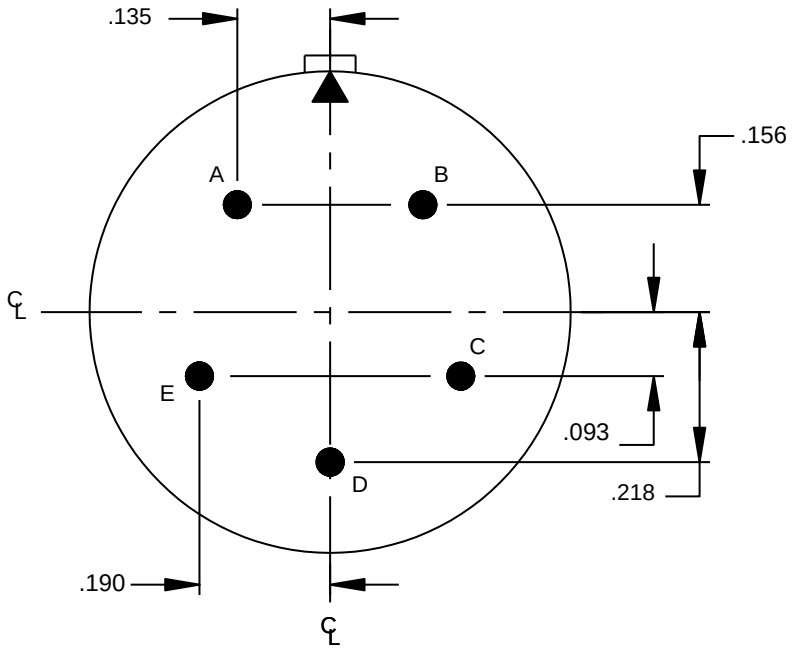

18-20

(Inactive for New Design after 13 May 1954 for SAE-AS50151 and MIL-DTL-83723 series II. Active for new design for SAE-AS95234.)

(Not applicable to MIL-DTL-22992.)

Contacts (Insert arrangement 18-20)		
Contact position identification (ID)	Contact location	
	X-axis (mm)	Y-axis (mm)
A	-.135 (3.43)	+.156 (3.96)
B	+.135 (3.43)	+.156 (3.96)
C	+.190 (4.83)	-.093 (2.36)
D	-.000 (0.00)	-.218 (5.54)
E	-.190 (4.83)	-.093 (4.83)

Shell size	Arrangement number	Number of contacts	Size contacts	Service rating	Contact location	Supersedes
18	-20	5	16	A	All	MS33684-20

Alternate insert positions			
A degrees (A°)			
W	X	Y	Z
90	180	270	---

FIGURE 6. Insert arrangement, electrical connector, shell size 18, MIL-DTL-22992, classes C, J and R, MIL-DTL-83723, series II, SAE-AS50151 and SAE-AS95234 – Continued.

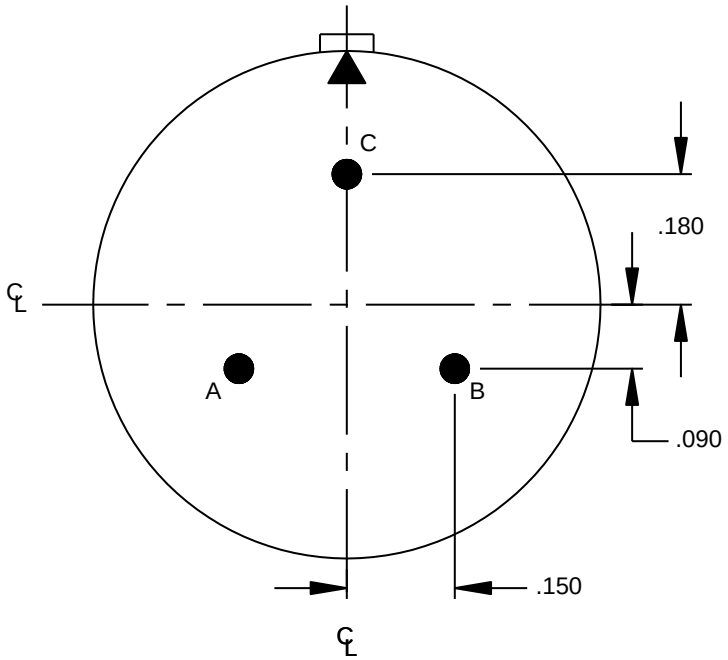

18-22

(Inactive for New Design after 13 May 1954 for SAE-AS50151 and MIL-DTL-83723 series II. Active for new design for SAE-AS95234.)

(Not applicable to MIL-DTL-22992.)

Contacts (Insert arrangement 18-22)		
Contact position identification (ID)	Contact location	
	X-axis (mm)	Y-axis (mm)
A	-.150 (3.81)	-.090 (2.29)
B	+.150 (3.81)	-.090 (2.29)
~~G~~ C	+.000 (0.00)	+.180 (4.57)

Shell size	Arrangement number	Number of contacts	Size contacts	Service rating	Contact location	Supersedes
18	-22	3	16	D	All	MS33684-22

Alternate insert positions			
A degrees (A°)			
W	X	Y	Z
70	145	215	290

FIGURE 6. Insert arrangement, electrical connector, shell size 18, MIL-DTL-22992, classes C, J and R, MIL-DTL-83723, series II, SAE-AS50151 and SAE-AS95234 – Continued.

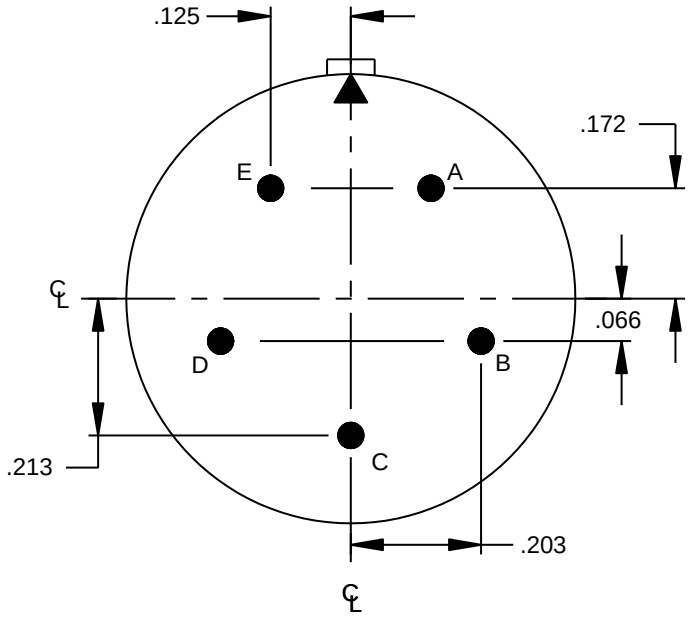

18-29

(Inactive for New Design after 13 May 1954 for SAE-AS50151 and MIL-DTL-83723 series II. Active for new design for SAE-AS95234.)

(Not applicable to MIL-DTL-22992.)

Contacts (Insert arrangement 18-29)		
Contact position identification (ID)	Contact location	
	X-axis (mm)	Y-axis (mm)
A	+.125 (3.18)	+.172 (4.37)
B	+.203 (5.16)	-.066 (1.68)
C	+.000 (0.00)	-.213 (5.41)
D	-.203 (5.16)	-.066 (1.68)
E	-.125 (3.18)	+.172 (4.37)

Shell size	Arrangement number	Number of contacts	Size contacts	Service rating	Contact location	Supersedes
18	-29	5	16	A	All	MS33684-29

Alternate insert positions			
A degrees (A°)			
W	X	Y	Z
90	180	270	---

FIGURE 6. Insert arrangement, electrical connector, shell size 18, MIL-DTL-22992, classes C, J and R, MIL-DTL-83723, series II, SAE-AS50151 and SAE-AS95234 – Continued.

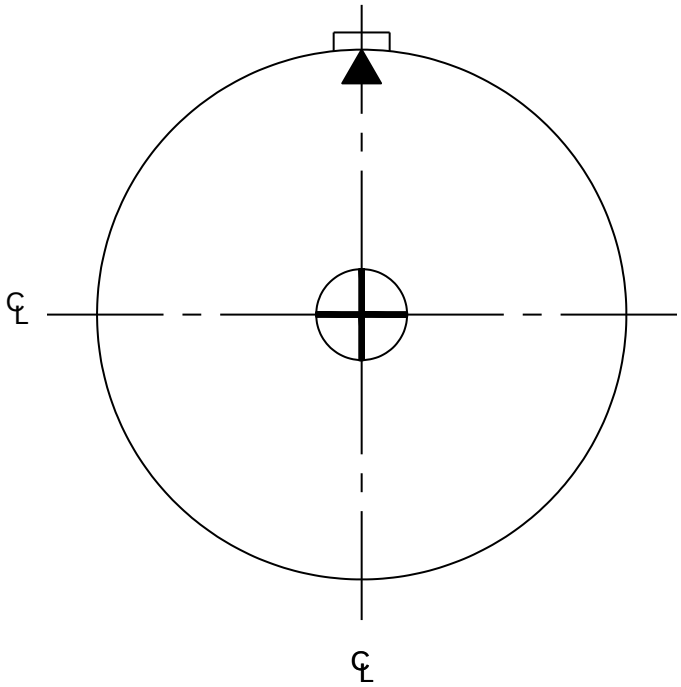

20-2

Contacts (Insert arrangement 20-2)		
Contact position identification (ID)	Contact location	
	X-axis (mm)	Y-axis (mm)
Not applicable	+.000 (0.00)	+.000 (0.00)

Shell size	Arrangement number	Number of contacts	Size contacts	Service rating	Contact location	Supersedes
20	-2	1	0	D	All	MS33685-2

Note: This insert arrangement has no alternate insert positions.

FIGURE 7. Insert arrangement, electrical connector, shell size 20, MIL-DTL-22992, classes C, J and R, MIL-DTL-83723, series II, SAE-AS50151 and SAE-AS95234.

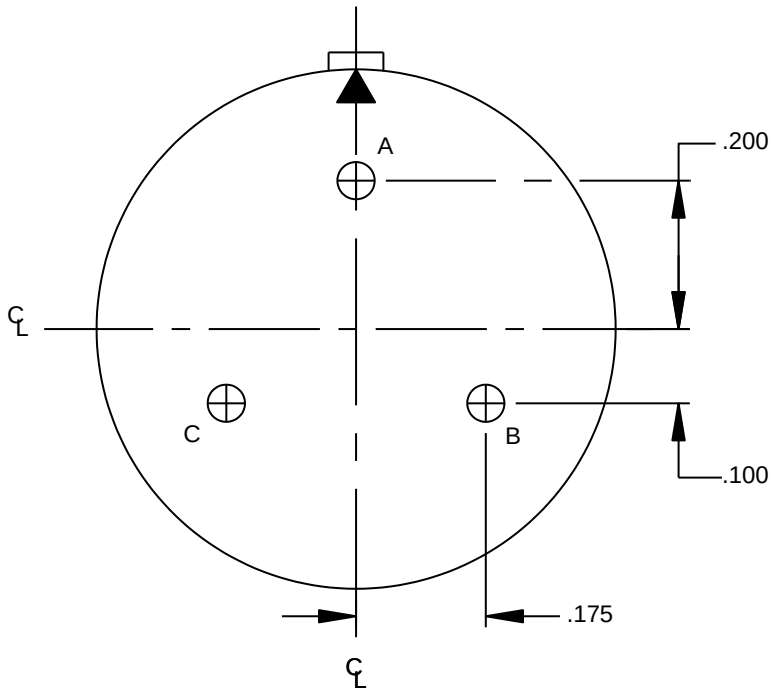

20-3

(Inactive for New Design after 13 May 1954 for SAE-AS50151 and MIL-DTL-83723 series II. Active for new design for SAE-AS95234.)

(Not applicable to MIL-DTL-22992.)

Contacts (Insert arrangement 20-3)		
Contact position identification (ID)	Contact location	
	X-axis (mm)	Y-axis (mm)
A	+.000 (0.00)	+.200 (5.08)
B	+.175 (4.45)	-.100 (2.54)
C	-.175 (4.45)	-.100 (2.54)

Shell size	Arrangement number	Number of contacts	Size contacts	Service rating	Contact location	Supersedes
20	-3	3	12	D	All	MS33685-3

Alternate insert positions			
A degrees (A°)			
W	X	Y	Z
70	145	215	290

FIGURE 7. Insert arrangement, electrical connector, shell size 20, MIL-DTL-22992, classes C, J and R, MIL-DTL-83723, series II, SAE-AS50151 and SAE-AS95234 – Continued.

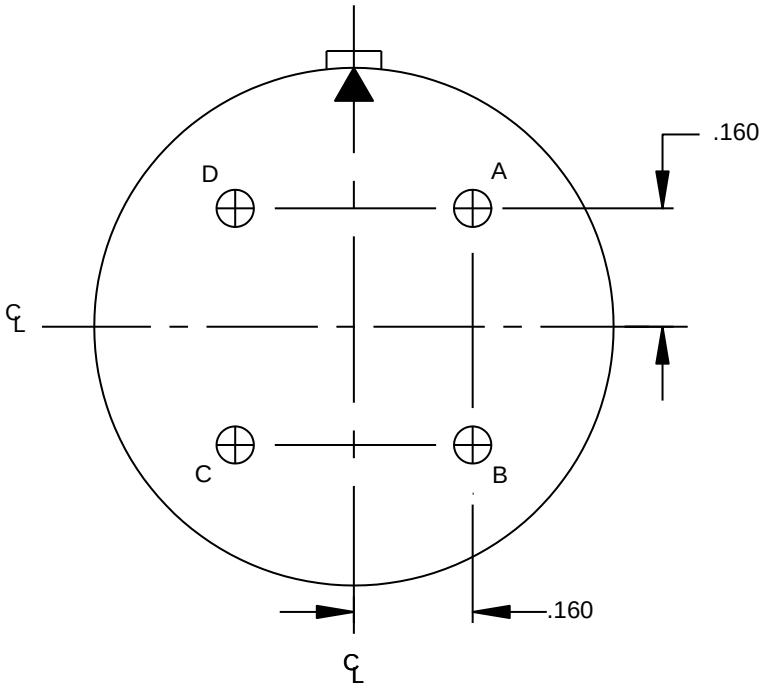

20-4

Contacts (Insert arrangement 20-4)		
Contact position identification (ID)	Contact location	
	X-axis (mm)	Y-axis (mm)
A	+.160 (4.06)	+.160 (4.06)
B	+.160 (4.06)	-.160 (4.06)
C	-.160 (4.06)	-.160 (4.06)
D	-.160 (4.06)	+.160 (4.06)

Shell size	Arrangement number	Number of contacts	Size contacts	Service rating	Contact location	Supersedes
20	-4	4	12	D	All	MS33685-4

Alternate insert positions			
A degrees (A°)			
W	X	Y	Z
45	110	250	---

FIGURE 7. Insert arrangement, electrical connector, shell size 20, MIL-DTL-22992, classes C, J and R, MIL-DTL-83723, series II, SAE-AS50151 and SAE-AS95234 – Continued.

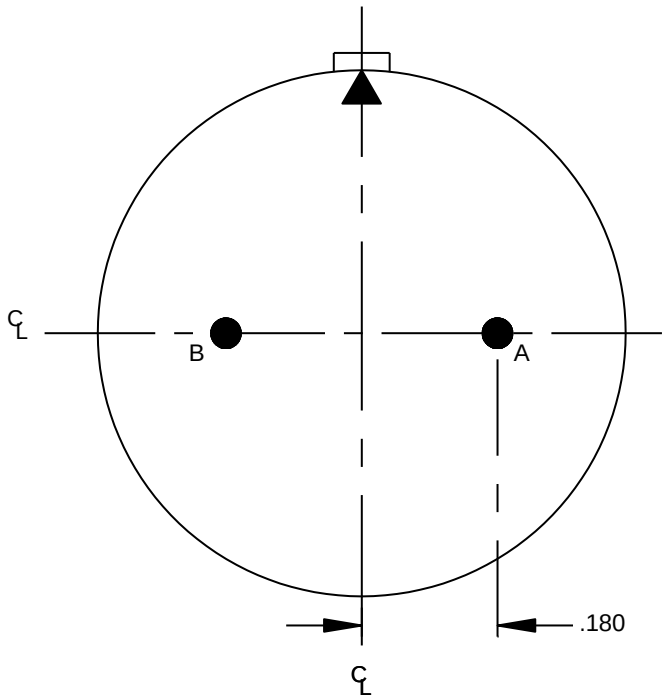

20-5

(Inactive for New Design after 17 Dec 1958 for SAE-AS50151 and MIL-DTL-83723 series II. Active for new design for SAE-AS95234.)

(Not applicable to MIL-DTL-22992.)

Contacts (Insert arrangement 20-5)		
Contact position identification (ID)	Contact location	
	X-axis (mm)	Y-axis (mm)
A	+.180 (4.57)	+.000 (0.00)
B	-.180 (4.57)	+.000 (0.00)

Shell size	Arrangement number	Number of contacts	Size contacts	Service rating	Contact location	Supersedes
20	-5	2	16	E	All	MS33685-5

Alternate insert positions			
A degrees (A°)			
W	X	Y	Z
35	110	250	325

FIGURE 7. Insert arrangement, electrical connector, shell size 20, MIL-DTL-22992, classes C, J and R, MIL-DTL-83723, series II, SAE-AS50151 and SAE-AS95234 – Continued.

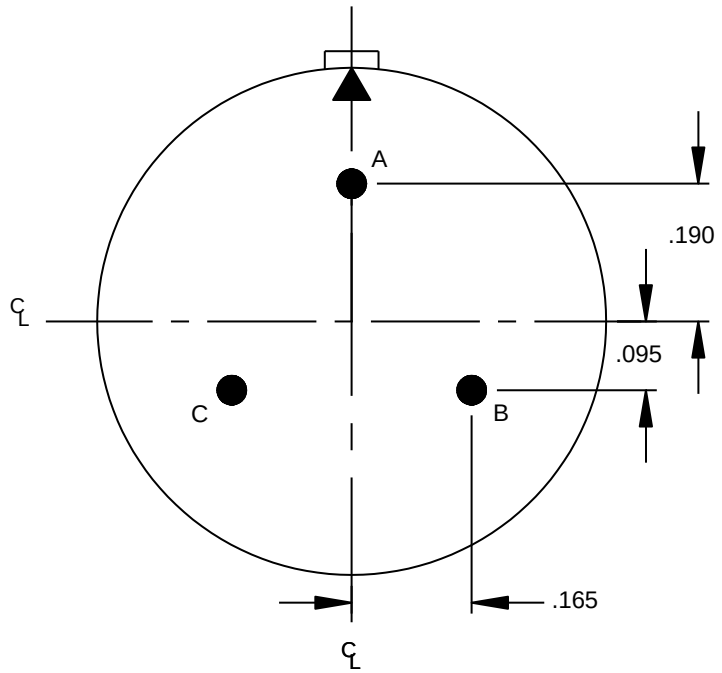

20-6

(Inactive for New Design after 13 May 1954 for SAE-AS50151 and MIL-DTL-83723 series II. Active for new design for SAE-AS95234.)

(Not applicable to MIL-DTL-22992.)

Contacts (Insert arrangement 20-6)		
Contact position identification (ID)	Contact location	
	X-axis (mm)	Y-axis (mm)
A	+.000 (0.00)	+.190 (4.83)
B	+.165 (4.19)	-.095 (2.41)
C	-.165 (4.19)	-.095 (2.41)

Shell size	Arrangement number	Number of contacts	Size contacts	Service rating	Contact location	Supersedes
20	-6	3	16	D	All	MS33685-6

Alternate insert positions			
A degrees (A°)			
W	X	Y	Z
70	145	215	290

FIGURE 7. Insert arrangement, electrical connector, shell size 20, MIL-DTL-22992, classes C, J and R, MIL-DTL-83723, series II, SAE-AS50151 and SAE-AS95234 – Continued.

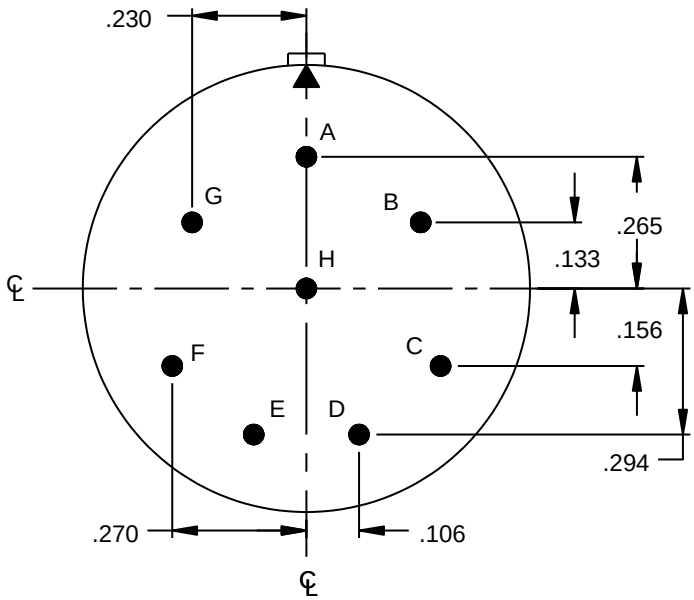

20-7

Contacts (Insert arrangement 20-7)		
Contact position identification (ID)	Contact location	
	X-axis (mm)	Y-axis (mm)
A	+.000 (0.00)	+.265 (6.73)
B	+.230 (5.84)	+.133 (3.38)
C	+.270 (6.86)	-.156 (3.96)
D	+.106 (2.69)	-.294 (7.47)
E	-.106 (2.69)	-.294 (7.47)
F	-.270 (6.86)	-.156 (3.96)
G	-.230 (5.84)	+.133 (3.38)
H	+.000 (0.00)	+.000 (0.00)

Shell size	Arrangement number	Number of contacts	Size contacts	Service rating	Contact location	Supersedes
20	-7	4	16	D	A, B, G, H	MS33685-7
		4		A	All others	

Alternate insert positions			
A degrees (A°)			
W	X	Y	Z
80	110	250	280

FIGURE 7. Insert arrangement, electrical connector, shell size 20, MIL-DTL-22992, classes C, J and R, MIL-DTL-83723, series II, SAE-AS50151 and SAE-AS95234 – Continued.

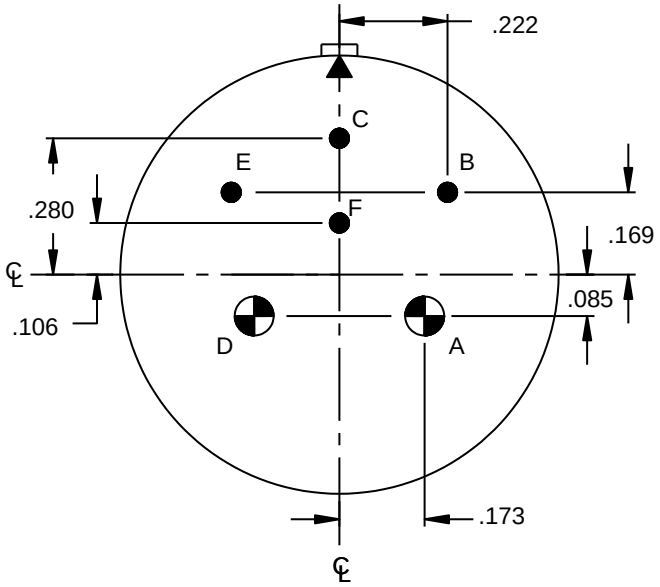

20-8

Contacts (Insert arrangement 20-8)		
Contact position identification (ID)	Contact location	
	X-axis (mm)	Y-axis (mm)
A	+.173 (4.39)	-.085 (2.16)
B	+.222 (5.64)	+.169 (4.29)
C	+.000 (0.00)	+.280 (7.11)
D	-.173 (4.39)	-.085 (2.16)
E	-.222 (5.64)	+.169 (4.29)
F	+.000 (0.00)	+.106 (2.69)

Shell size	Arrangement number	Number of contacts	Size contacts	Service rating	Contact location	Supersedes
20	-8	4	16	INST	All others	MS33685-8
		2	8		A,D	

Alternate insert positions			
A degrees (A°)			
W	X	Y	Z
80	110	250	280

FIGURE 7. Insert arrangement, electrical connector, shell size 20, MIL-DTL-22992, classes C, J and R, MIL-DTL-83723, series II, SAE-AS50151 and SAE-AS95234 – Continued.

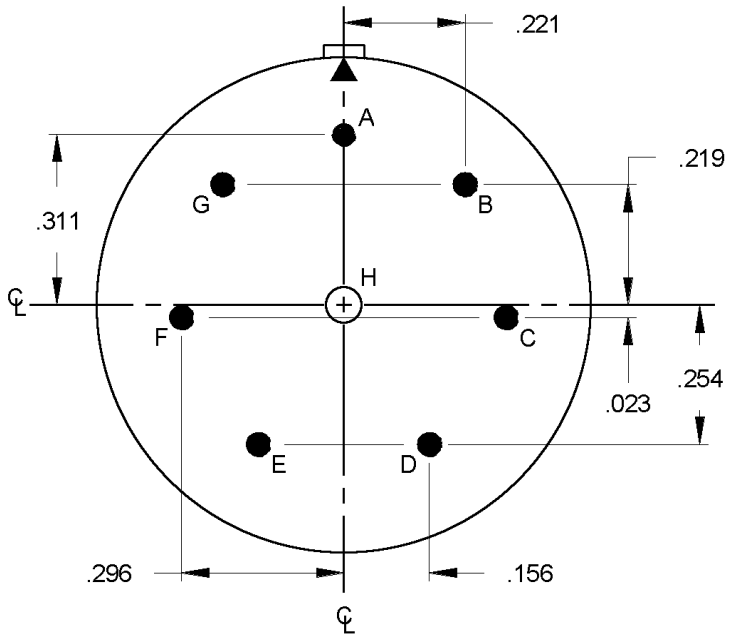

20-9

Contacts (Insert arrangement 20-9)		
Contact position identification (ID)	Contact location	
	X-axis (mm)	Y-axis (mm)
A	+.000 (0.00)	+.311 (7.90)
B	+.221 (5.61)	+.219 (5.56)
C	+.296 (7.52)	-.023 (0.58)
D	+.156 (3.96)	-.254 (6.45)
E	-.156 (3.96)	-.254 (6.45)
F	-.296 (7.52)	-.023 (0.58)
G	-.221 (5.61)	+.219 (5.56)
H	+.000 (0.00)	+.000 (0.00)

Shell size	Arrangement number	Number of contacts	Size contacts	Service rating	Contact location	Supersedes
20	-9	1	12	D	H	MS33685-9
		7	16	A	All others	

Alternate insert positions			
A degrees (A°)			
W	X	Y	Z
80	110	250	280

FIGURE 7. Insert arrangement, electrical connector, shell size 20, MIL-DTL-22992, classes C, J and R, MIL-DTL-83723, series II, SAE-AS50151 and SAE-AS95234 – Continued.

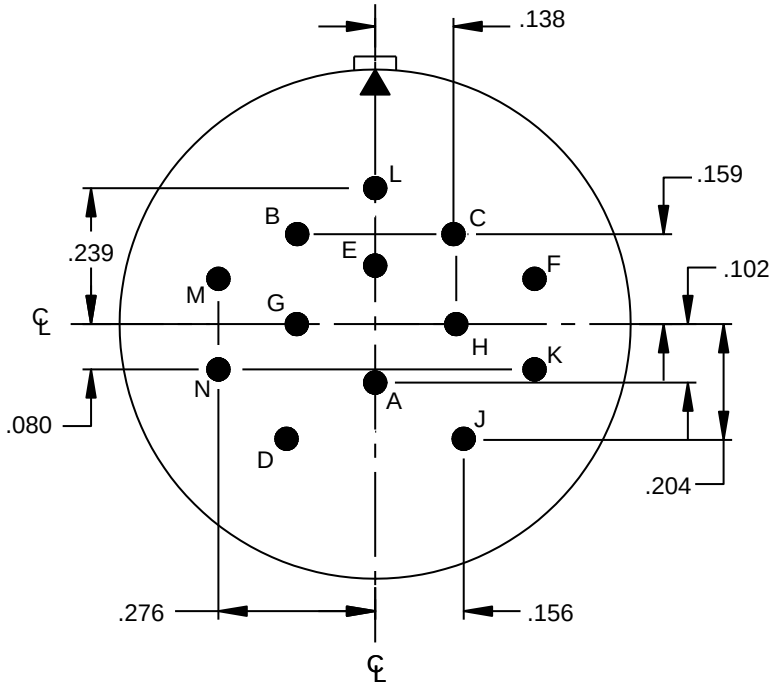

20-11

(Inactive for New Design after 1 June 1945 for SAE-AS50151 and MIL-DTL-83723 series II. Active for new design for SAE-AS95234.)

(Not applicable to MIL-DTL-22992.)

Contacts (Insert arrangement 20-11)		
Contact position identification (ID)	Contact location	
	X-axis (mm)	Y-axis (mm)
A	+.000 (0.00)	-.102 (2.59)
B	-.138 (3.51)	+.159 (4.04)
C	+.138 (3.51)	+.159 (4.04)
D	-.156 (3.96)	-.204 (5.18)
E	+.000 (0.00)	+.080 (2.03)
F	+.276 (7.01)	+.080 (2.03)
G	-.138 (3.51)	+.000 (0.00)
H	+.138 (3.51)	+.000 (0.00)
J	+.156 (3.96)	-.204 (5.18)
K	+.276 (7.01)	-.080 (2.03)
L	+.000 (0.00)	+.239 (6.07)
M	-.276 (7.01)	+.080 (2.03)
N	-.276 (7.01)	-.080 (2.03)

Shell size	Arrangement number	Number of contacts	Size contacts	Service rating	Contact location	Supersedes
20	-11	13	16	INST	All	MS33685-11

Note: This insert arrangement has no alternate insert positions.

FIGURE 7. Insert arrangement, electrical connector, shell size 20, MIL-DTL-22992, classes C, J and R, MIL-DTL-83723, series II, SAE-AS50151 and SAE-AS95234 – Continued.

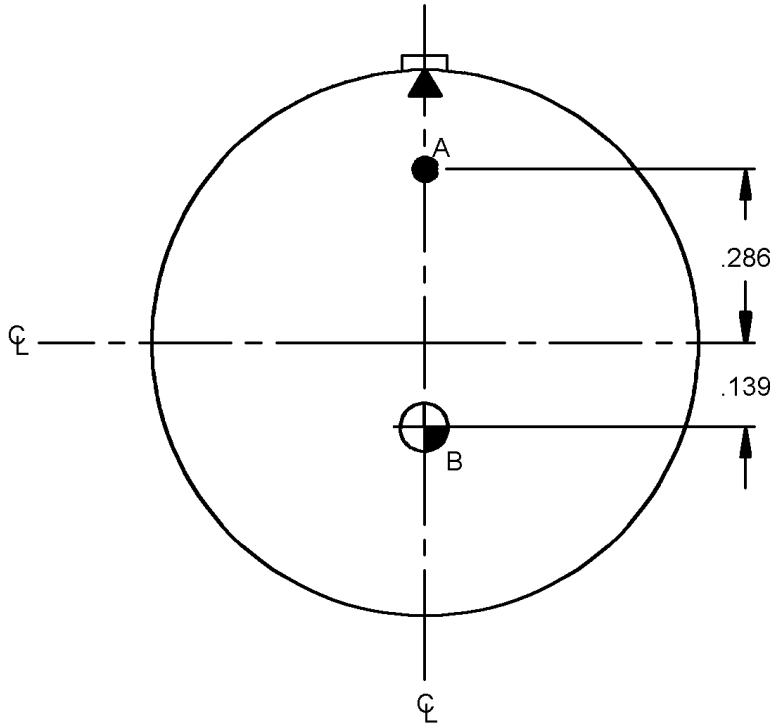

20-12

(Inactive for New Design after 13 May 1954 for SAE-AS50151 and MIL-DTL-83723 series II. Active for new design for SAE-AS95234.)

(Not applicable to MIL-DTL-22992.)

Contacts (Insert arrangement 20-12)		
Contact position identification (ID)	Contact location	
	X-axis (mm)	Y-axis (mm)
A	+.000 (0.00)	+.286 (7.26)
B	+.000 (0.00)	-.139 (3.53)

Shell size	Arrangement number	Number of contacts	Size contacts	Service rating	Contact location	Supersedes
20	-12	1	16	A	All	MS33685-12
		1	4			

Alternate insert positions			
A degrees (A°)			
W	X	Y	Z
80	110	250	280

FIGURE 7. Insert arrangement, electrical connector, shell size 20, MIL-DTL-22992, classes C, J and R, MIL-DTL-83723, series II, SAE-AS50151 and SAE-AS95234 – Continued.

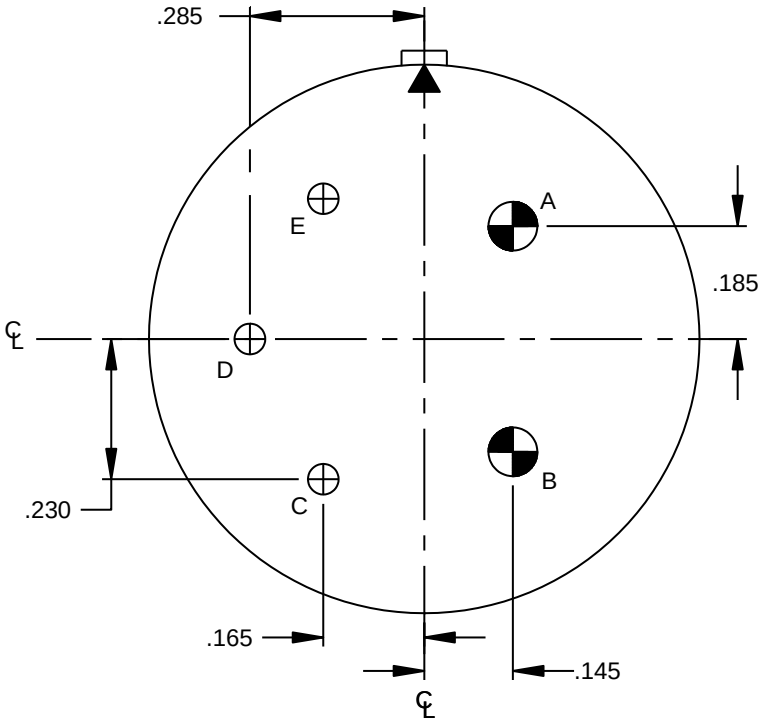

20-14

Contacts (Insert arrangement 20-14)		
Contact position identification (ID)	Contact location	
	X-axis (mm)	Y-axis (mm)
A	+.145 (3.68)	+.185 (4.70)
B	+.145 (3.68)	-.185 (4.70)
C	-.165 (4.19)	-.230 (5.84)
D	-.285 (7.24)	+.000 (0.00)
E	-.165 (4.19)	+.230 (5.84)

Shell size	Arrangement number	Number of contacts	Size contacts	Service rating	Contact location	Supersedes
20	-14	3	12	A	C,D,E	MS33685-14
		2	8		A,B	

Alternate insert positions			
A degrees (A°)			
W	X	Y	Z
80	110	250	280

FIGURE 7. Insert arrangement, electrical connector, shell size 20, MIL-DTL-22992, classes C, J and R, MIL-DTL-83723, series II, SAE-AS50151 and SAE-AS95234 – Continued.

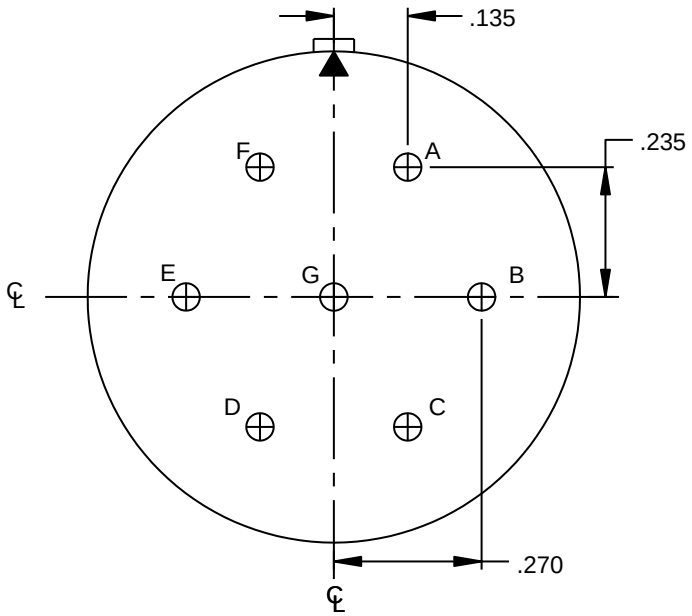

20-15

Contacts (Insert arrangement 20-15)		
Contact position identification (ID)	Contact location	
	X-axis (mm)	Y-axis (mm)
A	+.135 (3.43)	+.235 (5.97)
B	+.270 (6.86)	+.000 (0.00)
C	+.135 (3.43)	-.235 (5.97)
D	-.135 (3.43)	-.235 (5.97)
E	-.270 (6.86)	+.000 (0.00)
F	-.135 (3.43)	+.235 (5.97)
G	+.000 (0.00)	+.000 (0.00)

Shell size	Arrangement number	Number of contacts	Size contacts	Service rating	Contact location	Supersedes
20	-15	7	12	A	All	MS33685-15

Alternate insert positions			
A degrees (A°)			
W	X	Y	Z
80	---	---	280

FIGURE 7. Insert arrangement, electrical connector, shell size 20, MIL-DTL-22992, classes C, J and R, MIL-DTL-83723, series II, SAE-AS50151 and SAE-AS95234 – Continued.

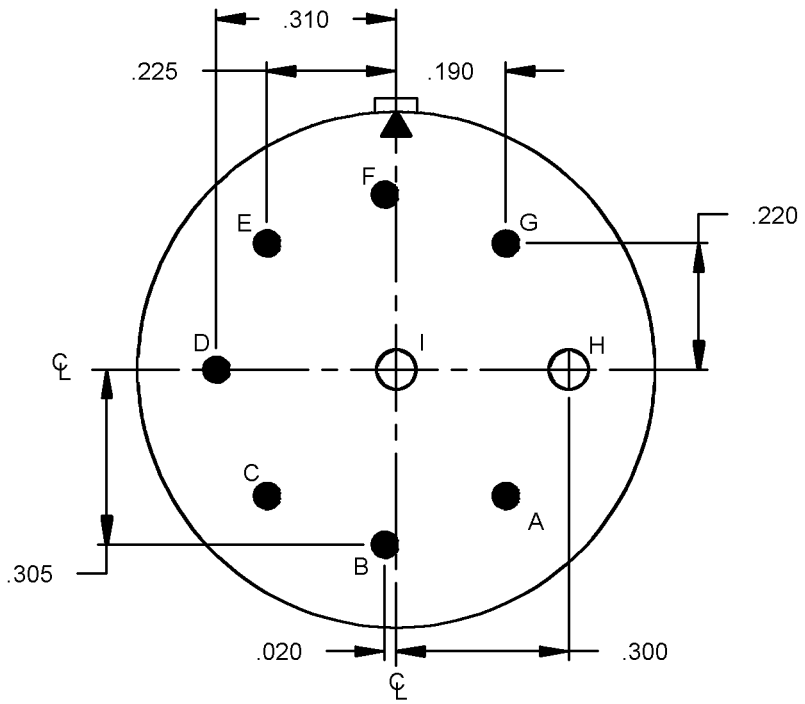

Contacts (Insert arrangement 20-16)		
Contact position identification (ID)	Contact location	
	X-axis (mm)	Y-axis (mm)
A	+.190 (4.83)	-.220 (5.59)
B	-.020 (0.51)	-.305 (7.75)
C	-.225 (5.72)	-.220 (5.59)
D	-.310 (7.87)	+.000 (0.00)
E	-.225 (5.72)	+.220 (5.59)
F	-.020 (0.51)	+.305 (7.75)
G	+.190 (4.83)	+.220 (5.59)
H	+.300 (7.62)	+.000 (0.00)
I	+.000 (0.00)	+.000 (0.00)

Shell size	Arrangement number	Number of contacts	Size contacts	Service rating	Contact location	Supersedes
20	-16	7	16	A	A,B,C,D,E,F,G	MS33685-16
		2	12		H, I	

Alternate insert positions			
A degrees (A°)			
W	X	Y	Z
80	110	250	280

FIGURE 7. Insert arrangement, electrical connector, shell size 20, MIL-DTL-22992, classes C, J and R, MIL-DTL-83723, series II, SAE-AS50151 and SAE-AS95234 – Continued.

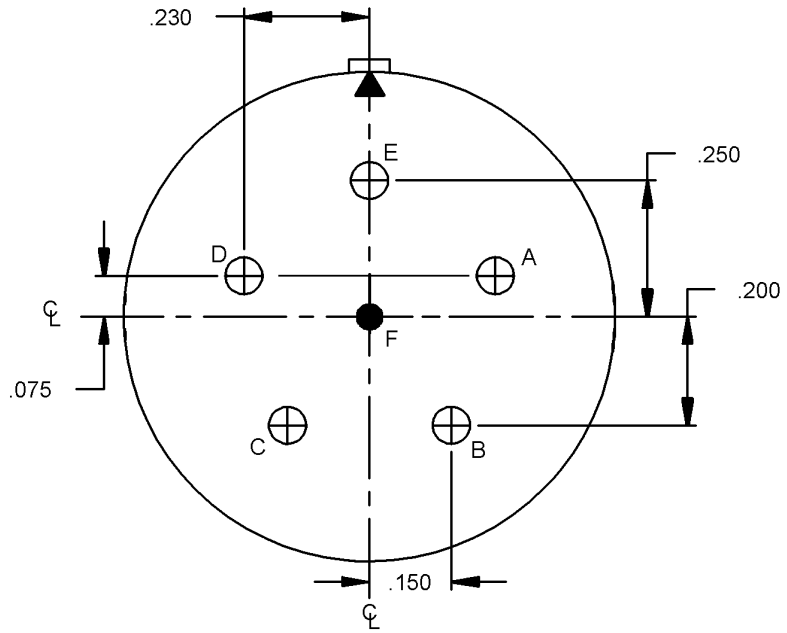

20-17

Contacts (Insert arrangement 20-17)		
Contact position identification (ID)	Contact location	
	X-axis (mm)	Y-axis (mm)
A	+.230 (5.84)	+.075 (1.91)
B	+.150 (3.81)	-.200 (5.08)
C	-.150 (3.81)	-.200 (5.08)
D	-.230 (5.84)	+.075 (1.91)
E	+.000 (0.00)	+.250 (6.35)
F	+.000 (0.00)	+.000 (0.00)

Shell size	Arrangement number	Number of contacts	Size contacts	Service rating	Contact location	Supersedes
20	-17	1	16	A	F	MS33685-17
		5	12		A,B,C,D,E	

Alternate insert positions			
A degrees (A°)			
W	X	Y	Z
90	180	270	---

FIGURE 7. Insert arrangement, electrical connector, shell size 20, MIL-DTL-22992, classes C, J and R, MIL-DTL-83723, series II, SAE-AS50151 and SAE-AS95234 – Continued.

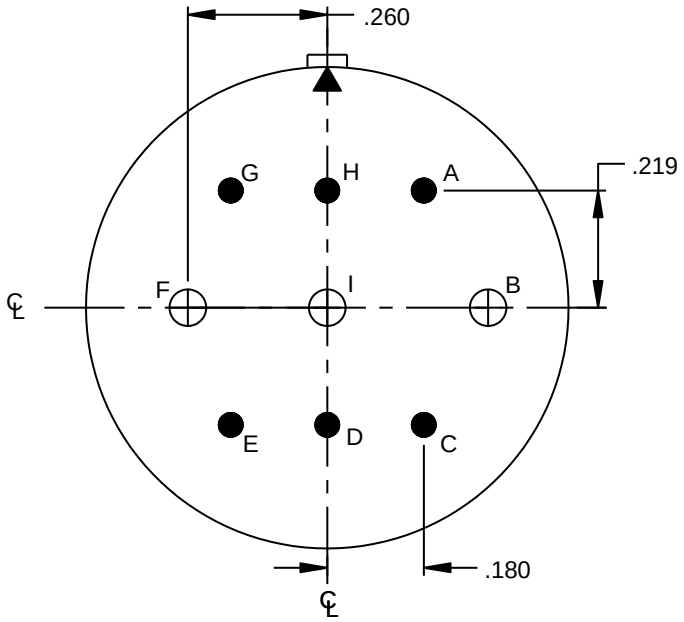

20-18

Contacts (Insert arrangement 20-18)		
Contact position identification (ID)	Contact location	
	X-axis (mm)	Y-axis (mm)
A	+.180 (4.57)	+.219 (5.56)
B	+.260 (6.60)	+.000 (0.00)
C	+.180 (4.57)	-.219 (5.56)
D	+.000 (0.00)	-.219 (5.56)
E	-.180 (4.57)	-.219 (5.56)
F	-.260 (6.60)	+.000 (0.00)
G	-.180 (4.57)	+.219 (5.56)
H	+.000 (0.00)	+.219 (5.56)
I	+.000 (0.00)	+.000 (0.00)

Shell size	Arrangement number	Number of contacts	Size contacts	Service rating	Contact location	Supersedes
20	-18	6	16	A	A,C,D,E,G,H	MS33685-18
		3	12		B,F,I	

Alternate insert positions			
A degrees (A°)			
W	X	Y	Z
35	110	250	325

FIGURE 7. Insert arrangement, electrical connector, shell size 20, MIL-DTL-22992, classes C, J and R, MIL-DTL-83723, series II, SAE-AS50151 and SAE-AS95234 – Continued.

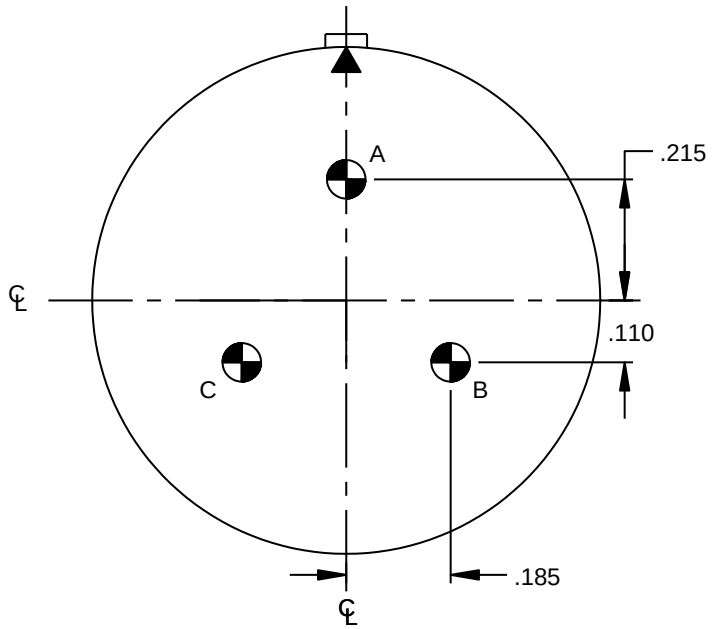

20-19

(Inactive for New Design after 13 May 1954 for SAE-AS50151 and MIL-DTL-83723 series II. Active for new design for SAE-AS95234.)

(Not applicable to MIL-DTL-22992.)

Contacts (Insert arrangement 20-19)		
Contact position identification (ID)	Contact location	
	X-axis (mm)	Y-axis (mm)
A	+.000 (0.00)	+.215 (5.46)
B	+.185 (4.70)	-.110 (2.79)
C	-.185 (4.70)	-.110 (2.79)

Shell size	Arrangement number	Number of contacts	Size contacts	Service rating	Contact location	Supersedes
20	-19	3	8	A	All	MS33685-19

Alternate insert positions			
A degrees (A°)			
W	X	Y	Z
90	180	270	---

FIGURE 7. Insert arrangement, electrical connector, shell size 20, MIL-DTL-22992, classes C, J and R, MIL-DTL-83723, series II, SAE-AS50151 and SAE-AS95234 – Continued.

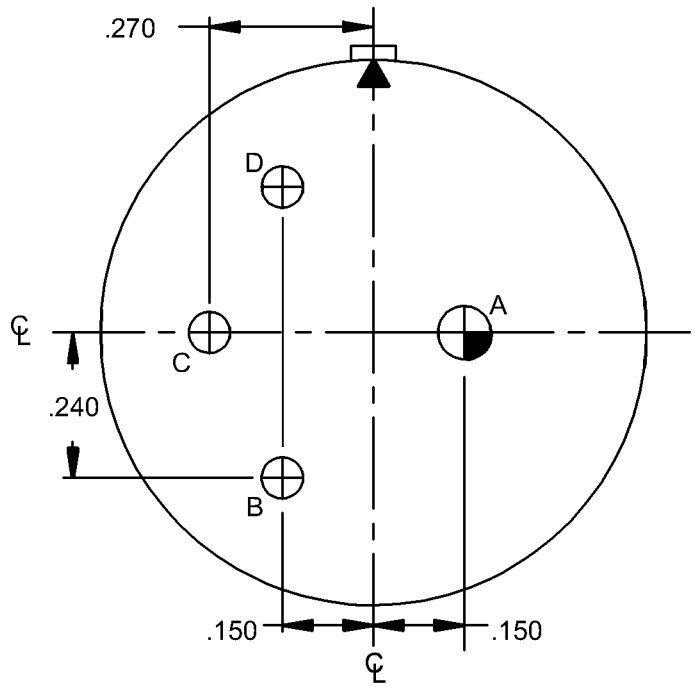

20-20

(Inactive for New Design after 17 Dec 1958 for SAE-AS50151 and MIL-DTL-83723 series II. Active for new design for SAE-AS95234.)

(Not applicable to MIL-DTL-22992.)

Contacts (Insert arrangement 20-20)		
Contact position identification (ID)	Contact location	
	X-axis (mm)	Y-axis (mm)
A	+.150 (3.81)	+.000 (0.00)
B	-.150 (3.81)	-.240 (6.10)
C	-.270 (6.86)	+.000 (0.00)
D	-.150 (3.81)	+.240 (6.10)

Shell size	Arrangement number	Number of contacts	Size contacts	Service rating	Contact location	Supersedes
20	-20	3	12	A	B,C,D	MS33685-20
		1	4		A	

Alternate insert positions			
A degrees (A°)			
W	X	Y	Z
80	110	250	280

FIGURE 7. Insert arrangement, electrical connector, shell size 20, MIL-DTL-22992, classes C, J and R, MIL-DTL-83723, series II, SAE-AS50151 and SAE-AS95234 – Continued.

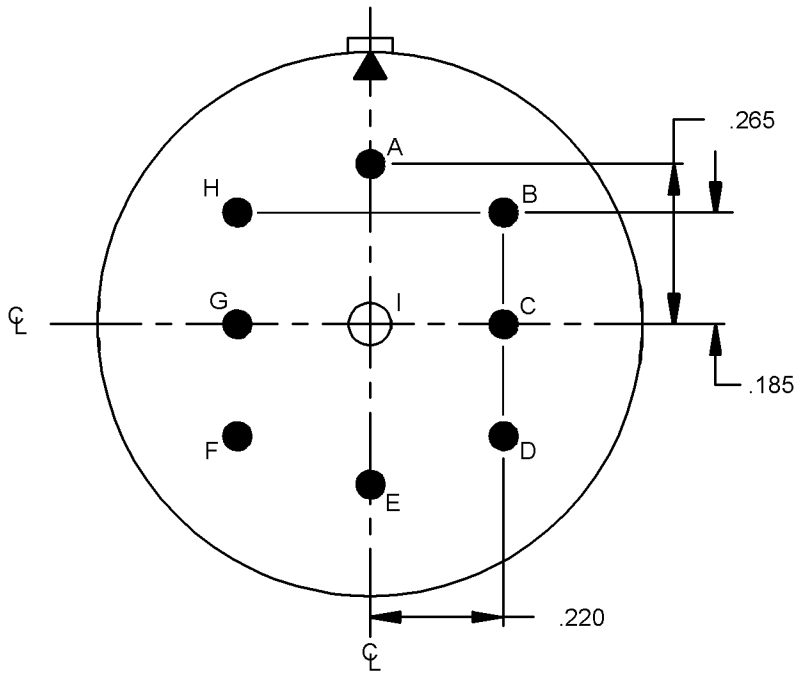

20-21

Contacts (Insert arrangement 20-21)		
Contact position identification (ID)	Contact location	
	X-axis (mm)	Y-axis (mm)
A	+.000 (0.00)	+.265 (6.73)
B	+.220 (5.59)	+.185 (4.70)
C	+.220 (5.59)	+.000 (0.00)
D	+.220 (5.59)	-.185 (4.70)
E	+.000 (0.00)	-.265 (6.73)
F	-.220 (5.59)	-.185 (4.70)
G	-.220 (5.59)	+ 000 (0.00)
H	-.220 (5.59)	+.185 (4.70)
I	+.000 (0.00)	+.000 (0.00)

Shell size	Arrangement number	Number of contacts	Size contacts	Service rating	Contact location	Supersedes
20	-21	8	16	A	All others	MS33685-21
		1	12		I	

Alternate insert positions			
A degrees (A°)			
W	X	Y	Z
35	110	250	325

FIGURE 7. Insert arrangement, electrical connector, shell size 20, MIL-DTL-22992, classes C, J and R, MIL-DTL-83723, series II, SAE-AS50151 and SAE-AS95234 – Continued.

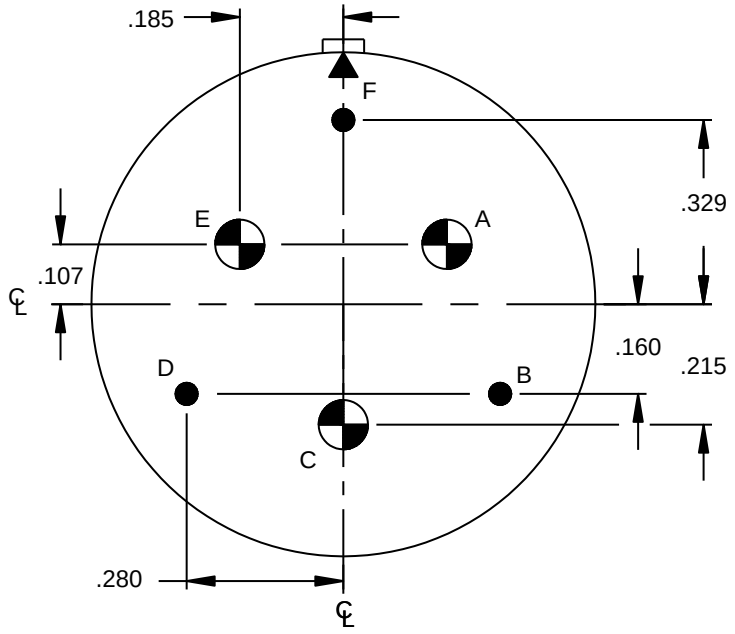

20-22

Contacts (Insert arrangement 20-22)		
Contact position identification (ID)	Contact location	
	X-axis (mm)	Y-axis (mm)
A	+.185 (4.70)	+.107 (2.72)
B	+.280 (7.11)	-.160 (4.06)
C	+.000 (0.00)	-.215 (5.46)
D	-.280 (7.11)	-.160 (4.06)
E	-.185 (4.70)	+.107 (2.72)
F	+.000 (0.00)	+.329 (8.36)

Shell size	Arrangement number	Number of contacts	Size contacts	Service rating	Contact location	Supersedes
20	-22	3	16	A	B,D,F	MS33685-22
		3	8		A,C,E	

Alternate insert positions			
A degrees (A°)			
W	X	Y	Z
80	110	250	280

FIGURE 7. Insert arrangement, electrical connector, shell size 20, MIL-DTL-22992, classes C, J and R, MIL-DTL-83723, series II, SAE-AS50151 and SAE-AS95234 – Continued.

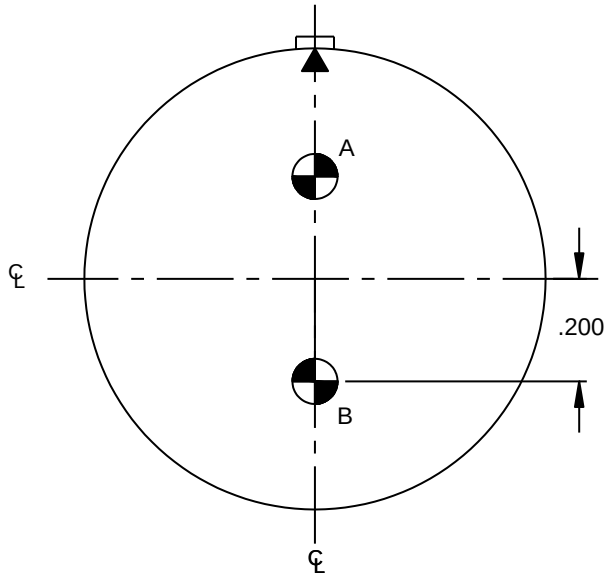

20-23

(Inactive for New Design after 13 May 1954 for SAE-AS50151 and MIL-DTL-83723 series II. Active for new design for SAE-AS95234.)

(Not applicable to MIL-DTL-22992.)

Contacts (Insert arrangement 20-23)		
Contact position identification (ID)	Contact location	
	X-axis (mm)	Y-axis (mm)
A	+.000 (0.00)	+.200 (5.08)
B	+.000 (0.00)	-.200 (5.08)

Shell size	Arrangement number	Number of contacts	Size contacts	Service rating	Contact location	Supersedes
20	-23	2	8	A	All	MS33685-23

Alternate insert positions			
A degrees (A°)			
W	X	Y	Z
35	110	250	325

FIGURE 7. Insert arrangement, electrical connector, shell size 20, MIL-DTL-22992, classes C, J and R, MIL-DTL-83723, series II, SAE-AS50151 and SAE-AS95234 – Continued.

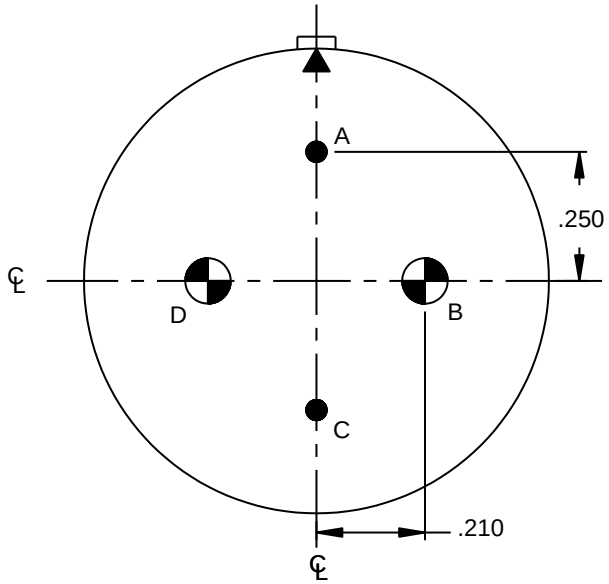

20-24

(Inactive for New Design after 13 May 1954 for SAE-AS50151 and MIL-DTL-83723 series II. Active for new design for SAE-AS95234.)

Contacts (Insert arrangement 20-24)		
Contact position identification (ID)	Contact location	
	X-axis (mm)	Y-axis (mm)
A	+.000 (0.00)	+.250 (6.35)
B	+.210 (5.33)	+.000 (0.00)
C	+.000 (0.00)	-.250 (6.35)
D	-.210 (5.33)	+.000 (0.00)

Shell size	Arrangement number	Number of contacts	Size contacts	Service rating	Contact location	Supersedes
20	-24	2	16	A	A,C	MS33685-24
		2	8		B,D	

Alternate insert positions			
A degrees (A°)			
W	X	Y	Z
35	110	250	325

FIGURE 7. Insert arrangement, electrical connector, shell size 20, MIL-DTL-22992, classes C, J and R, MIL-DTL-83723, series II, SAE-AS50151 and SAE-AS95234 – Continued.

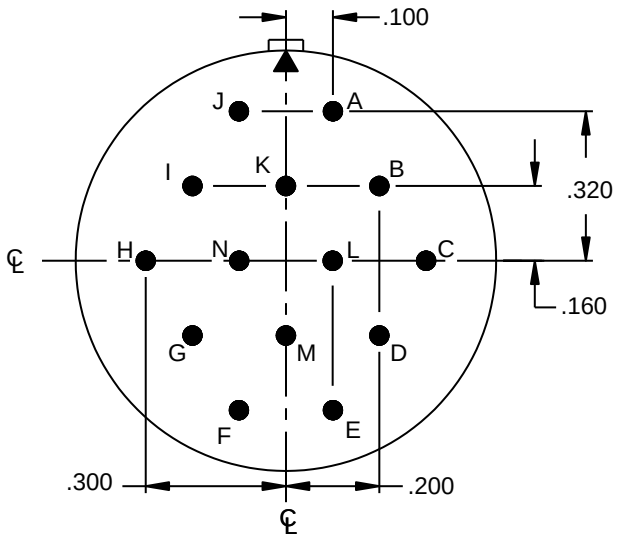

20-27

Contacts (Insert arrangement 20-27)		
Contact position identification (ID)	Contact location	
	X-axis (mm)	Y-axis (mm)
A	+.100 (2.54)	+.320 (8.13)
B	+.200 (5.08)	+.160 (4.06)
C	+.300 (7.62)	+.000 (0.00)
D	+.200 (5.08)	-.160 (4.06)
E	+.100 (2.54)	-.320 (8.13)
F	-.100 (2.54)	-.320 (8.13)
G	-.200 (5.08)	-.160 (4.06)
H	-.300 (7.62)	+.000 (0.00)
I	-.200 (5.08)	+.160 (4.06)
J	-.100 (2.54)	+.320 (8.13)
K	+.000 (0.00)	+.160 (4.06)
L	+.100 (2.54)	+.000 (0.00)
M	+.000 (0.00)	-.160 (4.06)
N	-.100 (2.54)	+.000 (0.00)

Shell size	Arrangement number	Number of contacts	Size contacts	Service rating	Contact location	Supersedes
20	-27	14	16	A	All	MS33685-27

Alternate insert positions			
A degrees (A°)			
W	X	Y	Z
35	110	250	325

FIGURE 7. Insert arrangement, electrical connector, shell size 20, MIL-DTL-22992, classes C, J and R, MIL-DTL-83723, series II, SAE-AS50151 and SAE-AS95234 – Continued.

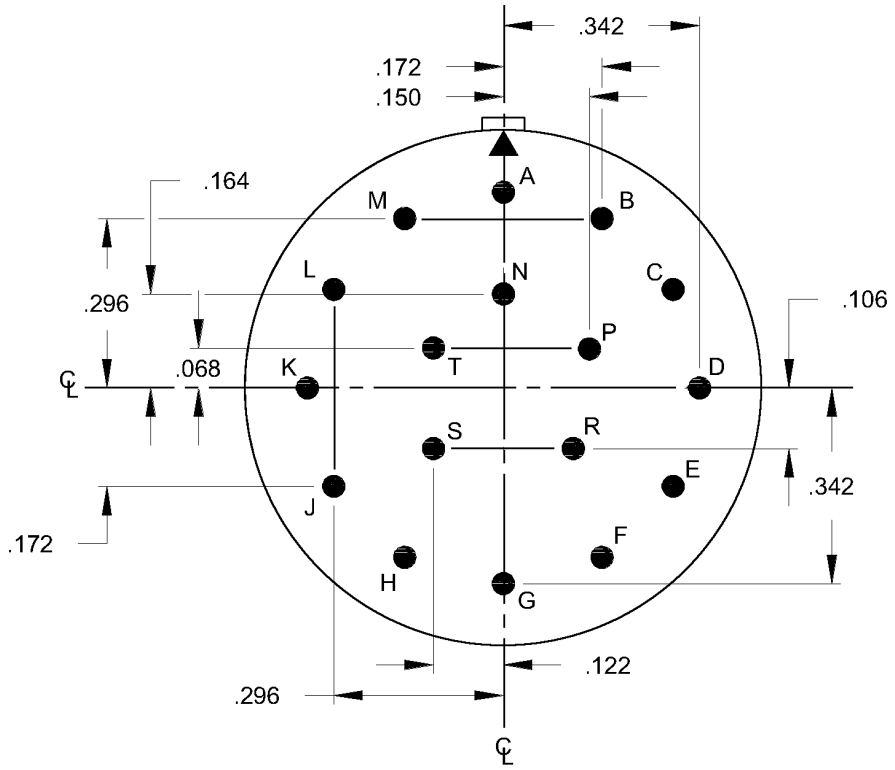

20-29

Contacts (Insert arrangement 20-29)		
Contact position ID	Contact location	
	X-axis (mm)	Y-axis (mm)
A	+.000 (0.00)	+.342 (8.69)
B	+.172 (4.37)	+.296 (7.52)
C	+.296 (7.52)	+.172 (4.37)
D	+.342 (8.69)	+.000 (0.00)
E	+.296 (7.52)	-.172 (4.37)
F	+.172 (4.37)	-.296 (7.52)
G	+.000 (0.00)	-.342 (8.69)
H	-.172 (4.37)	-.296 (7.52)
J	-.296 (7.52)	-.172 (4.37)

Contacts (Insert arrangement 20-29)		
Contact position ID	Contact location	
	X-axis (mm)	Y-axis (mm)
K	-.342 (8.69)	+.000 (0.00)
L	-.296 (7.52)	+.172 (4.37)
M	-.172 (4.37)	+.296 (7.52)
N	+.000 (0.00)	+.164 (4.17)
P	+.150 (3.81)	+.068 (1.73)
R	+.122 (3.10)	-.106 (2.69)
S	-.122 (3.10)	-.106 (2.69)
T	-.150 (3.81)	+.068 (1.73)
---	---	---

Shell size	Arrangement number	Number of contacts	Size contacts	Service rating	Contact location	Supersedes
20	-29	17	16	A	All	MS33685-29

Alternate insert positions			
A degrees (A°)			
W	X	Y	Z
80	---	---	280

FIGURE 7. Insert arrangement, electrical connector, shell size 20, MIL-DTL-22992, classes C, J and R, MIL-DTL-83723, series II, SAE-AS50151 and SAE-AS95234 – Continued.

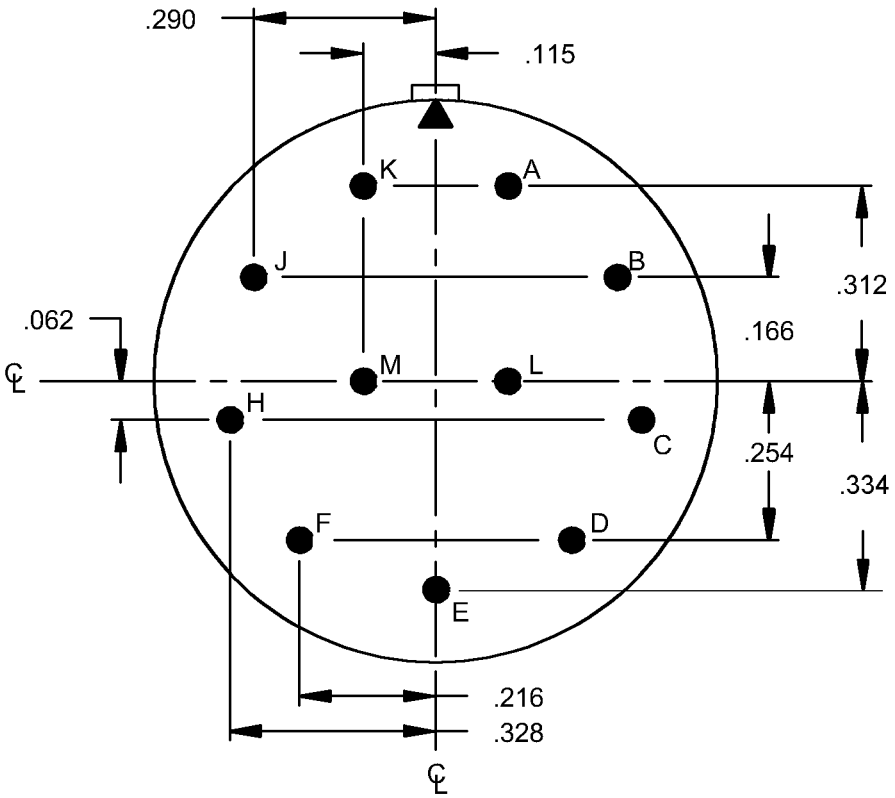

20-31

Contacts (Insert arrangement 20-31)		
Contact position identification (ID)	Contact location	
	X-axis (mm)	Y-axis (mm)
A	+.115 (2.92)	+.312 (7.92)
B	+.290 (7.37)	+.166 (4.22)
C	+.328 (8.33)	-.062 (1.57)
D	+.216 (5.49)	-.254 (6.45)
E	+.000 (0.00)	-.334 (8.48)
F	-.216 (5.49)	-.254 (6.45)
H	-.328 (8.33)	-.062 (1.57)
J	-.290 (7.37)	+.166 (4.22)
K	-.115 (2.92)	+.312 (7.92)
L	+.115 (2.92)	+.000 (0.00)
M	-.115 (2.92)	+.000 (0.00)

Shell size	Arrangement number	Number of contacts	Size contacts	Service rating	Contact location	Supersedes
20	-31	11	16	A	All	MS33685-31

Note: This insert arrangement has no alternate insert positions.

FIGURE 7. Insert arrangement, electrical connector, shell size 20, MIL-DTL-22992, classes C, J and R, MIL-DTL-83723, series II, SAE-AS50151 and SAE-AS95234 – Continued.

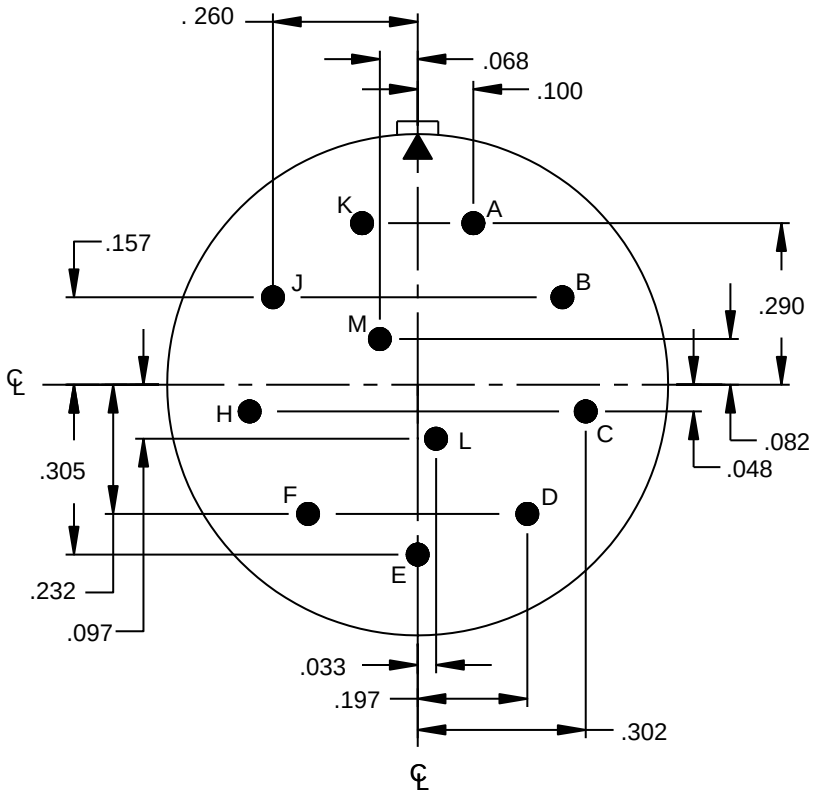

20-33

Contacts (Insert arrangement 20-33)		
Contact position identification (ID)	Contact location	
	X-axis (mm)	Y-axis (mm)
A	+.100 (2.54)	+.290 (7.37)
B	+.260 (6.60)	+.157 (3.99)
C	+.302 (7.67)	-.048 (1.22)
D	+.197 (5.00)	-.232 (5.89)
E	+.000 (0.00)	-.305 (7.75)
F	-.197 (5.00)	-.232 (5.89)
H	-.302 (7.67)	-.048 (1.22)
J	-.260 (6.60)	+.157 (3.99)
K	-.100 (2.54)	+.290 (7.37)
L	+.033 (0.84)	-.097 (2.46)
M	-.068 (1.73)	+.082 (2.08)

Shell size	Arrangement number	Number of contacts	Size contacts	Service rating	Contact location	Supersedes
20	-33	11	16	A	All	MS33685-33

Note: This insert arrangement has no alternate insert positions.

FIGURE 7. Insert arrangement, electrical connector, shell size 20, MIL-DTL-22992, classes C, J and R, MIL-DTL-83723, series II, SAE-AS50151 and SAE-AS95234 – Continued.

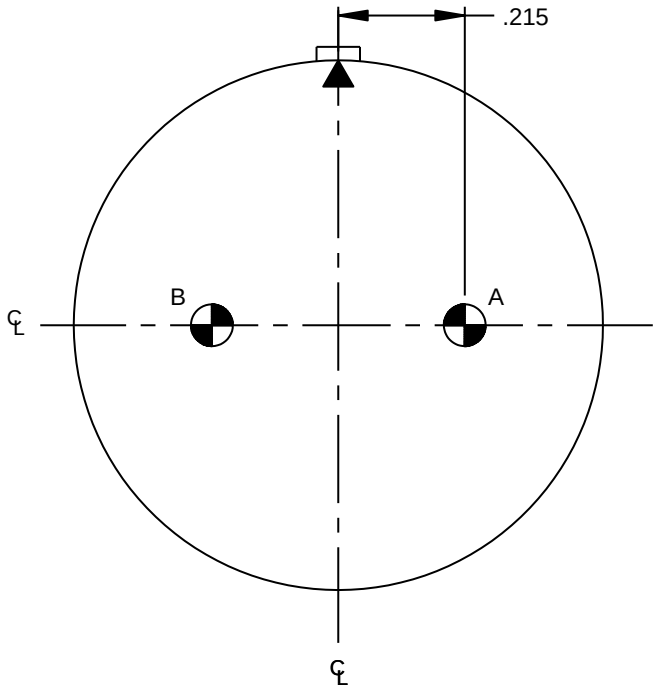

22-1

(Not applicable to MIL-DTL-22992.)

(Inactive for New Design after 13 May 1954 for SAE-AS50151 and MIL-DTL-83723 series II. Active for new design for SAE-AS95234.)

Contacts (Insert arrangement 22-1)		
Contact position identification (ID)	Contact location	
	X-axis (mm)	Y-axis (mm)
A	+.215 (5.46)	+.000 (0.00)
B	-.215 (5.46)	+.000 (0.00)

Shell size	Arrangement number	Number of contacts	Size contacts	Service rating	Contact location	Supersedes
22	-1	2	8	D	All	MS33686-1

Alternate insert positions			
A degrees (A°)			
W	X	Y	Z
35	110	250	325

FIGURE 8. Insert arrangement, electrical connector, shell size 22, MIL-DTL-22992, classes C, J and R, MIL-DTL-83723, series II, and SAE-AS50151 and SAE-AS95234.

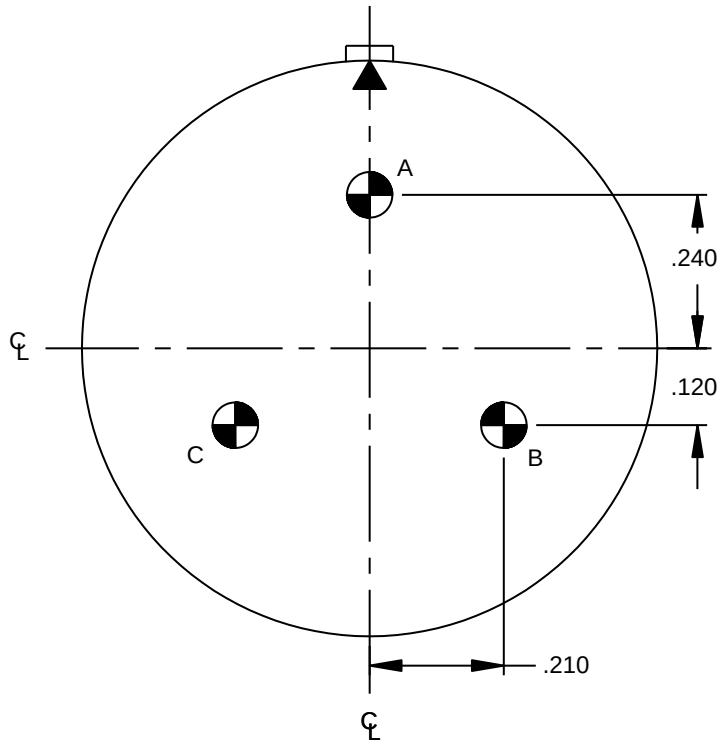

22-2

Contacts (Insert arrangement 22-2)		
Contact position identification (ID)	Contact location	
	X-axis (mm)	Y-axis (mm)
A	+.000 (0.00)	+.240 (6.10)
B	+.210 (5.33)	-.120 (3.05)
C	-.210 (5.33)	-.120 (3.05)

Shell size	Arrangement number	Number of contacts	Size contacts	Service rating	Contact location	Supersedes
22	-2	3	8	D	All	MS33686-2

Alternate insert positions			
A degrees (A°)			
W	X	Y	Z
70	145	215	290

FIGURE 8. Insert arrangement, electrical connector, shell size 22, MIL-DTL-22992, classes C, J and R, MIL-DTL-83723, series II, and SAE-AS50151 and SAE-AS95234 - Continued.

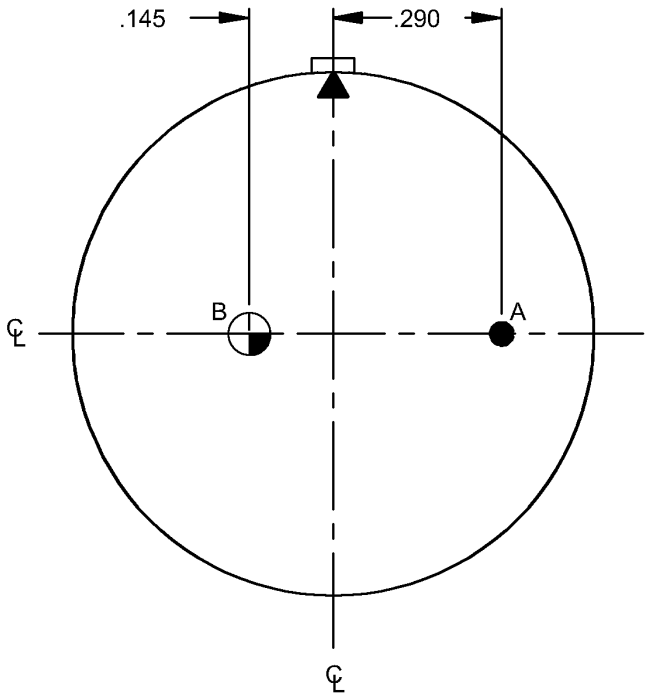

22-3

(Not applicable to MIL-DTL-22992.)

(Inactive for New Design after 17 Dec 1958 for SAE-AS50151 and MIL-DTL-83723 series II. Active for new design for SAE-AS95234.)

Contacts (Insert arrangement 22-3)		
Contact position identification (ID)	Contact location	
	X-axis (mm)	Y-axis (mm)
A	+.290 (7.37)	+.000 (0.00)
B	-.145 (3.68)	+.000 (0.00)

Shell size	Arrangement number	Number of contacts	Size contacts	Service rating	Contact location	Supersedes
22	-3	1	16	D	A	MS33686-3
		1	4		B	

Alternate insert positions			
A degrees (A°)			
W	X	Y	Z
80	110	250	280

FIGURE 8. Insert arrangement, electrical connector, shell size 22, MIL-DTL-22992, classes C, J and R, MIL-DTL-83723, series II, and SAE-AS50151 and SAE-AS95234 - Continued.

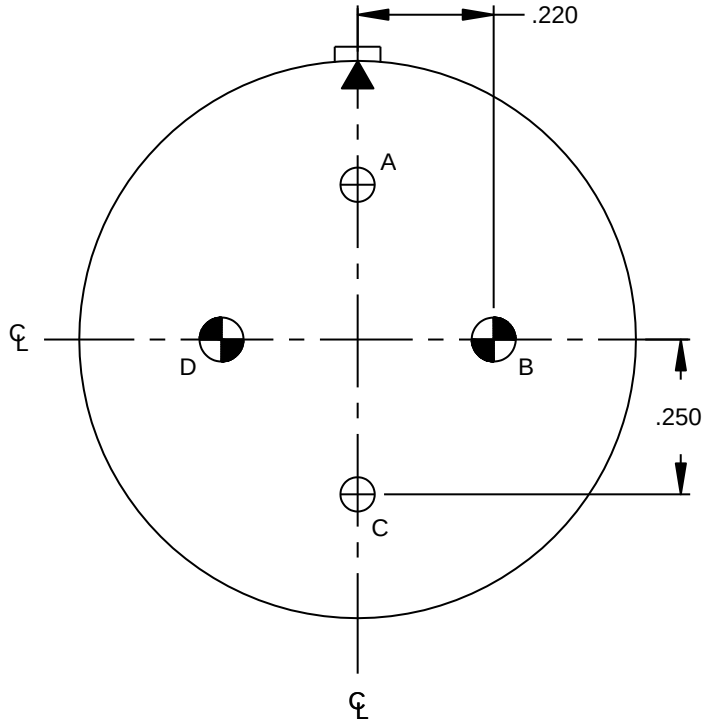

22-4

(Not applicable to MIL-DTL-22992.)

(Inactive for New Design after 19 Dec 1954 for SAE-AS50151 and MIL-DTL-83723 series II. Active for new design for SAE-AS95234.)

Contacts (Insert arrangement 22-4)		
Contact position identification (ID)	Contact location	
	X-axis (mm)	Y-axis (mm)
A	+.000 (0.00)	+.250 (6.35)
B	+.220 (5.59)	+.000 (0.00)
C	+.000 (0.00)	-.250 (6.35)
D	-.220 (5.59)	+.000 (0.00)

Shell size	Arrangement number	Number of contacts	Size contacts	Service rating	Contact location	Supersedes
22	-4	2	12	A	A, C	MS33686-4
		2	8		B, D	

Alternate insert positions			
A degrees (A°)			
W	X	Y	Z
35	110	250	325

FIGURE 8. Insert arrangement, electrical connector, shell size 22, MIL-DTL-22992, classes C, J and R, MIL-DTL-83723, series II, and SAE-AS50151 and SAE-AS95234 - Continued.

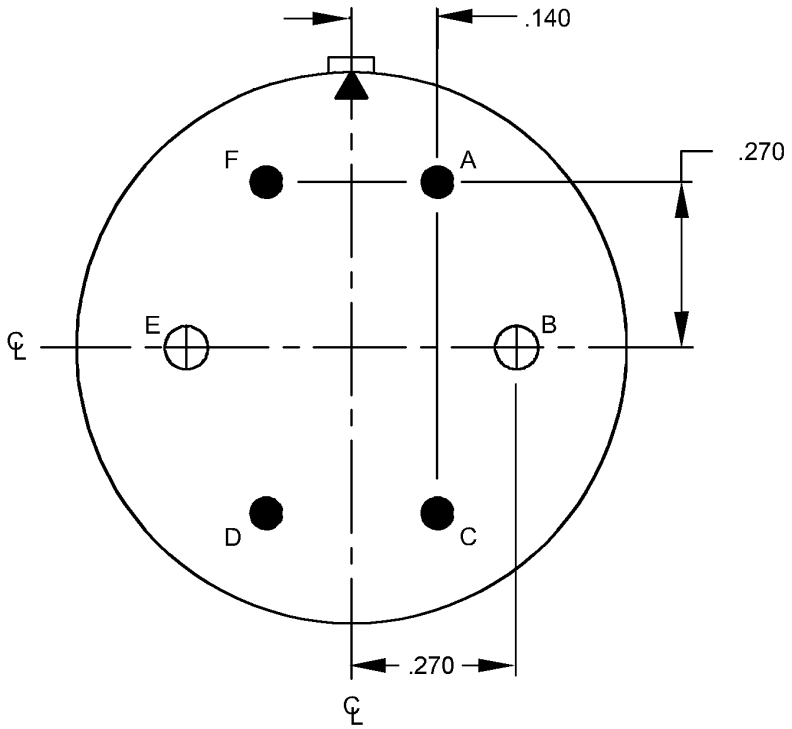

22-5

Contacts (Insert arrangement 22-5)		
Contact position identification (ID)	Contact location	
	X-axis (mm)	Y-axis (mm)
A	+.140 (3.56)	+.270 (6.86)
B	+.270 (6.86)	+.000 (0.00)
C	+.140 (3.56)	-.270 (6.86)
D	-.140 (3.56)	-.270 (6.86)
E	-.270 (6.86)	+.000 (0.00)
F	-.140 (3.56)	+.270 (6.86)

Shell size	Arrangement number	Number of contacts	Size contacts	Service rating	Contact location	Supersedes
22	-5	4	16	D	A,C,D,F	MS33686-5
		2	12		B,E	

Alternate insert positions			
A degrees (A°)			
W	X	Y	Z
35	110	250	325

FIGURE 8. Insert arrangement, electrical connector, shell size 22, MIL-DTL-22992, classes C, J and R, MIL-DTL-83723, series II, and SAE-AS50151 and SAE-AS95234 - Continued.

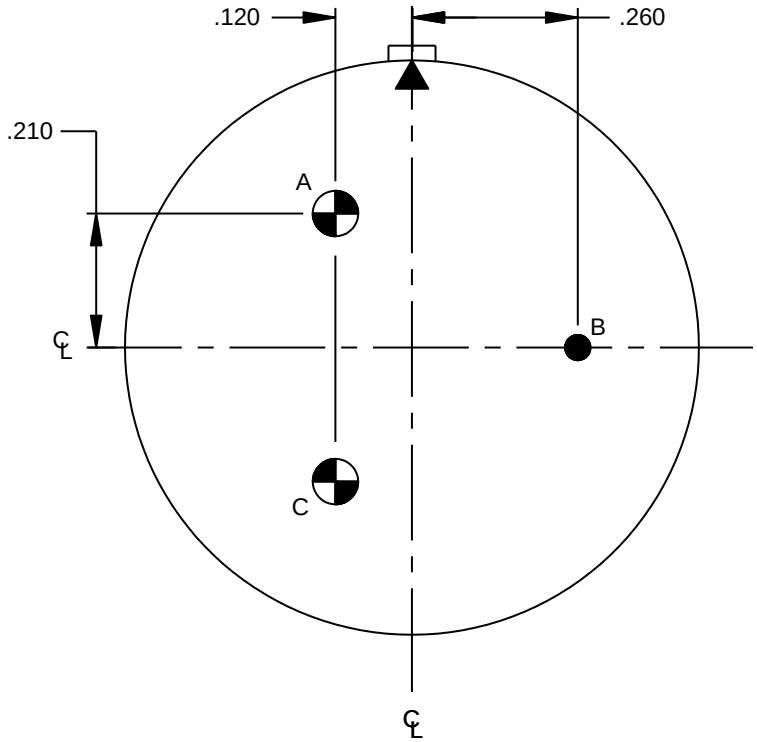

22-6

(Not applicable to MIL-DTL-22992.)

(Inactive for New Design after 13 May 1954 for SAE-AS50151 and MIL-DTL-83723 series II. Active for new design for SAE-AS95234.)

Contacts (Insert arrangement 22-6)		
Contact position identification (ID)	Contact location	
	X-axis (mm)	Y-axis (mm)
A	-.120 (3.05)	+.210 (5.53)
B	+.260 (6.60)	+.000 (0.00)
C	-.120 (3.05)	-.210 (5.53)

Shell size	Arrangement number	Number of contacts	Size contacts	Service rating	Contact location	Supersedes
22	-6	1	16	D	B	MS33686-6
		2	8		A, C	

Alternate insert positions			
A degrees (A°)			
W	X	Y	Z
35	110	250	280

FIGURE 8. Insert arrangement, electrical connector, shell size 22, MIL-DTL-22992, classes C, J and R, MIL-DTL-83723, series II, and SAE-AS50151 and SAE-AS95234 - Continued.

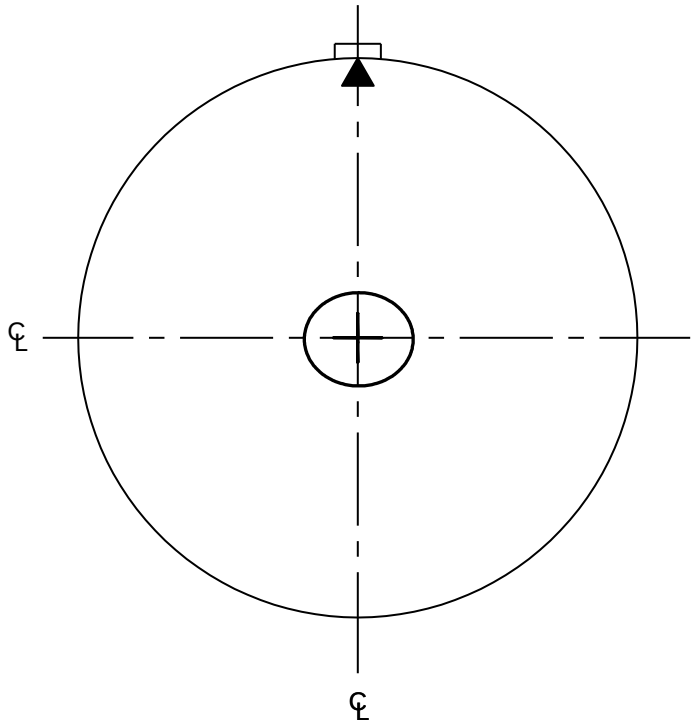

22-7

Contacts (Insert arrangement 22-7)		
Contact position identification (ID)	Contact location	
	X-axis (mm)	Y-axis (mm)
---	+.000 (0.00)	+.000 (0.00)

Shell size	Arrangement number	Number of contacts	Size contacts	Service rating	Contact location	Supersedes
22	-7	1	0	E	All	MS33686-7

Note: This insert arrangement has no alternate insert positions.

FIGURE 8. Insert arrangement, electrical connector, shell size 22, MIL-DTL-22992, classes C, J and R, MIL-DTL-83723, series II, and SAE-AS50151 and SAE-AS95234 - Continued.

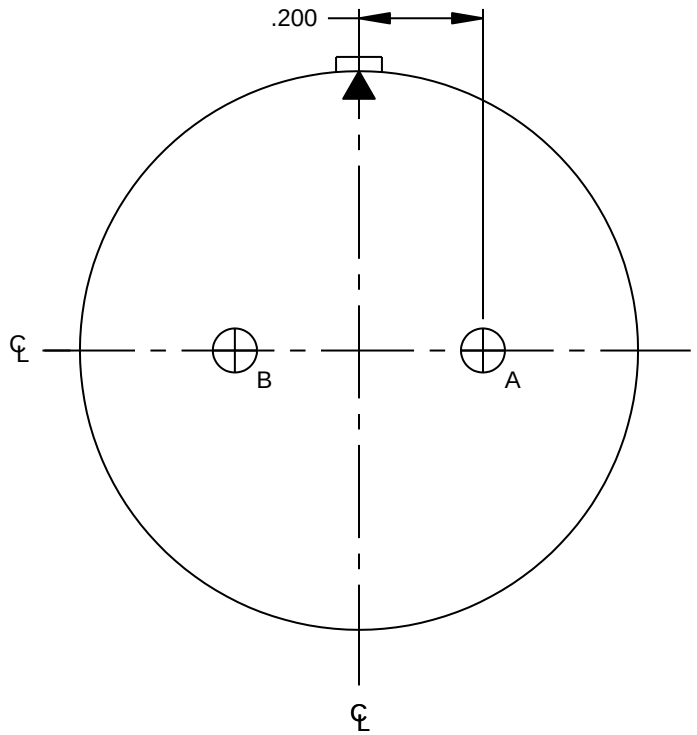

22-8

(Inactive for new design after 13 May 1954 for SAE-AS50151 and MIL-DTL-83723 series II. Active for new design for SAE-AS95234.)

(Not applicable to MIL-DTL-22992.)

Contacts (Insert arrangement 22-8)		
Contact position identification (ID)	Contact location	
	X-axis (mm)	Y-axis (mm)
A	+.200 (5.08)	+.000 (0.00)
B	-.200 (5.08)	+.000 (0.00)

Shell size	Arrangement number	Number of contacts	Size contacts	Service rating	Contact location	Supersedes
22	-8	2	12	E	All	MS33686-8

Alternate insert positions			
A degrees (A°)			
W	X	Y	Z
35	110	250	325

FIGURE 8. Insert arrangement, electrical connector, shell size 22, MIL-DTL-22992, classes C, J and R, MIL-DTL-83723, series II, and SAE-AS50151 and SAE-AS95234 - Continued.

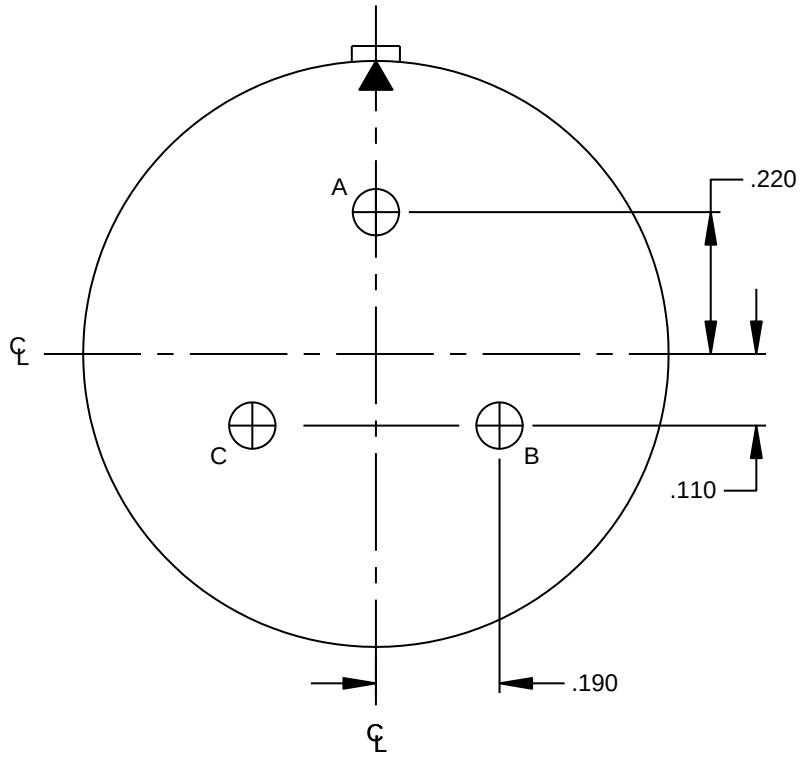

22-9

Contacts (Insert arrangement 22-9)		
Contact position identification (ID)	Contact location	
	X-axis (mm)	Y-axis (mm)
A	+.000 (0.00)	+.220 (5.59)
B	+.190 (4.83)	-.110 (2.79)
C	-.190 (4.83)	-.110 (2.79)

Shell size	Arrangement number	Number of contacts	Size contacts	Service rating	Contact location	Supersedes
22	-9	3	12	E	All	MS33686-9

Alternate insert positions			
A degrees (A°)			
W	X	Y	Z
70	145	215	290

FIGURE 8. Insert arrangement, electrical connector, shell size 22, MIL-DTL-22992, classes C, J and R, MIL-DTL-83723, series II, and SAE-AS50151 and SAE-AS95234 - Continued.

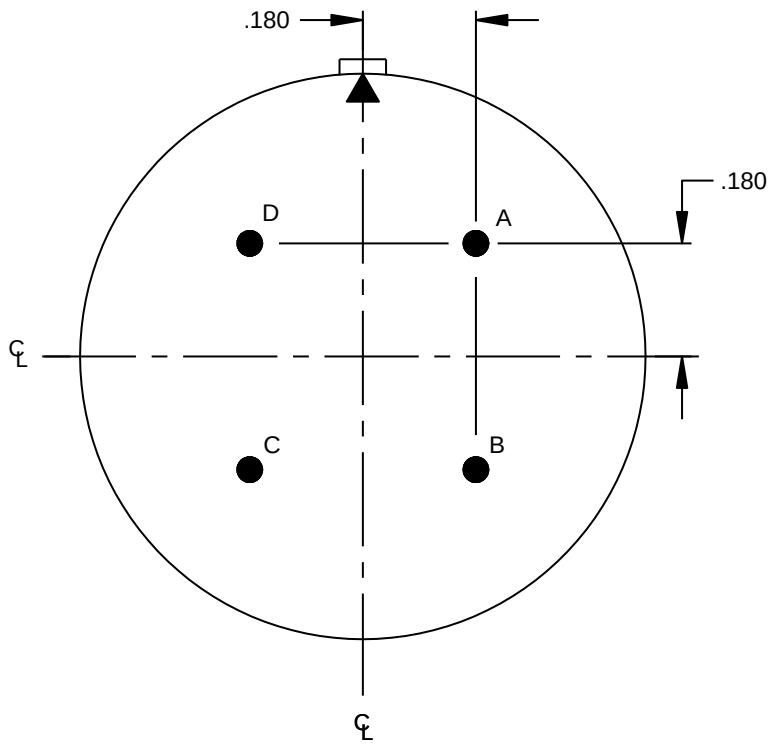

22-10

Contacts (Insert arrangement 22-10)		
Contact position identification (ID)	Contact location	
	X-axis (mm)	Y-axis (mm)
A	+.180 (4.57)	+.180 (4.57)
B	+.180 (4.57)	-.180 (4.57)
C	-.180 (4.57)	-.180 (4.57)
D	-.180 (4.57)	+.180 (4.57)

Shell size	Arrangement number	Number of contacts	Size contacts	Service rating	Contact location	Supersedes
22	-10	4	16	E	All	MS33686-10

Alternate insert positions			
A degrees (A°)			
W	X	Y	Z
35	110	250	325

FIGURE 8. Insert arrangement, electrical connector, shell size 22, MIL-DTL-22992, classes C, J and R, MIL-DTL-83723, series II, and SAE-AS50151 and SAE-AS95234 - Continued.

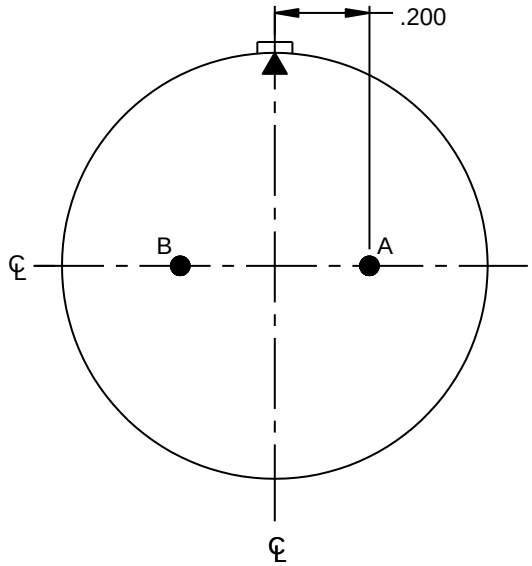

22-11

Contacts (Insert arrangement 22-11)		
Contact position identification (ID)	Contact location	
	X-axis (mm)	Y-axis (mm)
A	+.200 (5.08)	+.000 (0.00)
B	-.200 (5.08)	+.000 (0.00)

Shell size	Arrangement number	Number of contacts	Size contacts	Service rating	Contact location	Supersedes
22	-11	2	16	B	All	MS33686-11

Alternate insert positions			
A degrees (A°)			
W	X	Y	Z
35	110	250	325

FIGURE 8. Insert arrangement, electrical connector, shell size 22, MIL-DTL-22992, classes C, J and R, MIL-DTL-83723, series II, and SAE-AS50151 and SAE-AS95234 - Continued.

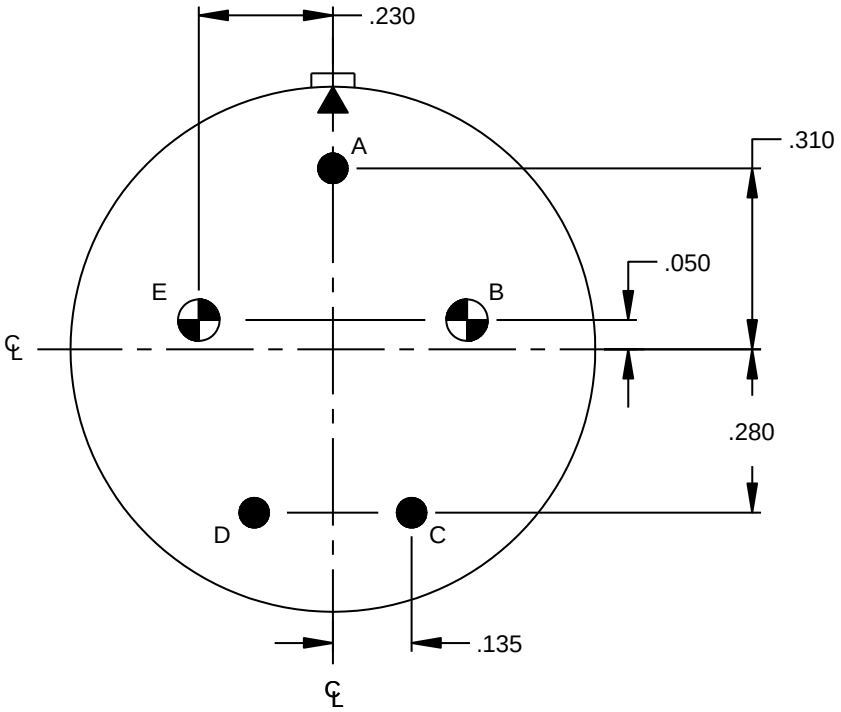

22-12

Contacts (Insert arrangement 22-12)		
Contact position identification (ID)	Contact location	
	X-axis (mm)	Y-axis (mm)
A	+.000 (0.00)	+.310 (7.87)
B	+.230 (5.84)	+.050 (1.27)
C	+.135 (3.43)	-.280 (7.11)
D	-.135 (3.43)	-.280 (7.11)
E	-.230 (5.84)	+.050 (1.27)

Shell size	Arrangement number	Number of contacts	Size contacts	Service rating	Contact location	Supersedes
22	-12	3	16	D	A,C,D	MS33686-12
		2	8		B,E	

Alternate insert positions			
A degrees (A°)			
W	X	Y	Z
80	110	250	280

FIGURE 8. Insert arrangement, electrical connector, shell size 22, MIL-DTL-22992, classes C, J and R, MIL-DTL-83723, series II, and SAE-AS50151 and SAE-AS95234 - Continued.

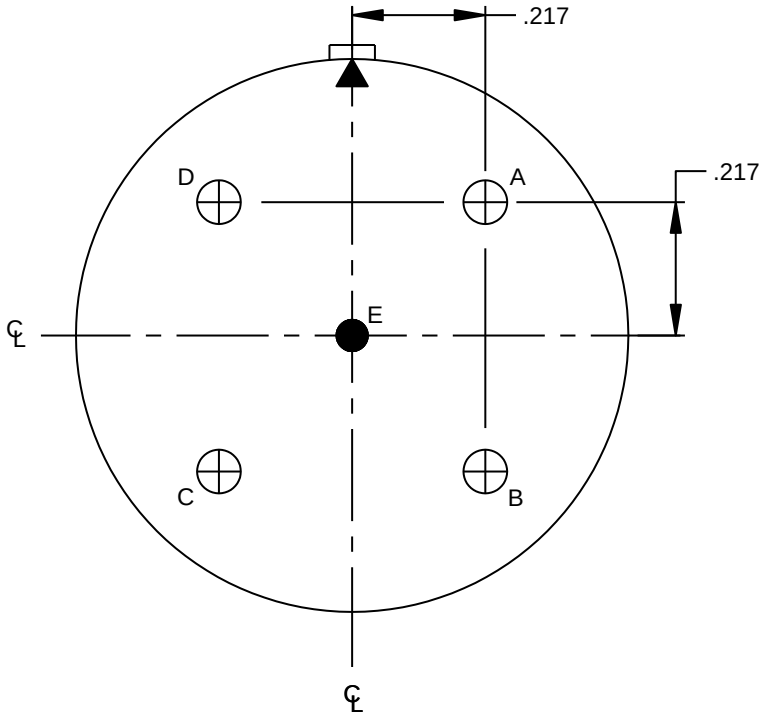

22-13

(Not applicable to MIL-DTL-22992.)

(Inactive for New Design after 13 May 1954 for SAE-AS50151 and MIL-DTL-83723 series II. Active for new design for SAE-AS95234.)

Contacts (Insert arrangement 22-13)		
Contact position identification (ID)	Contact location	
	X-axis (mm)	Y-axis (mm)
A	+.217 (5.51)	+.217 (5.51)
B	+.217 (5.51)	-.217 (5.51)
C	-.217 (5.51)	-.217 (5.51)
D	-.217 (5.51)	+.217 (5.51)
E	+.000 (0.00)	+.000 (0.00)

Shell size	Arrangement number	Number of contacts	Size contacts	Service rating	Contact location	Supersedes
22	-13	1	16	D	E	MS33686-13
		4	12	A	A,B,C,D	

Alternate insert positions			
A degrees (A°)			
W	X	Y	Z
35	110	250	325

FIGURE 8. Insert arrangement, electrical connector, shell size 22, MIL-DTL-22992, classes C, J and R, MIL-DTL-83723, series II, and SAE-AS50151 and SAE-AS95234 - Continued.

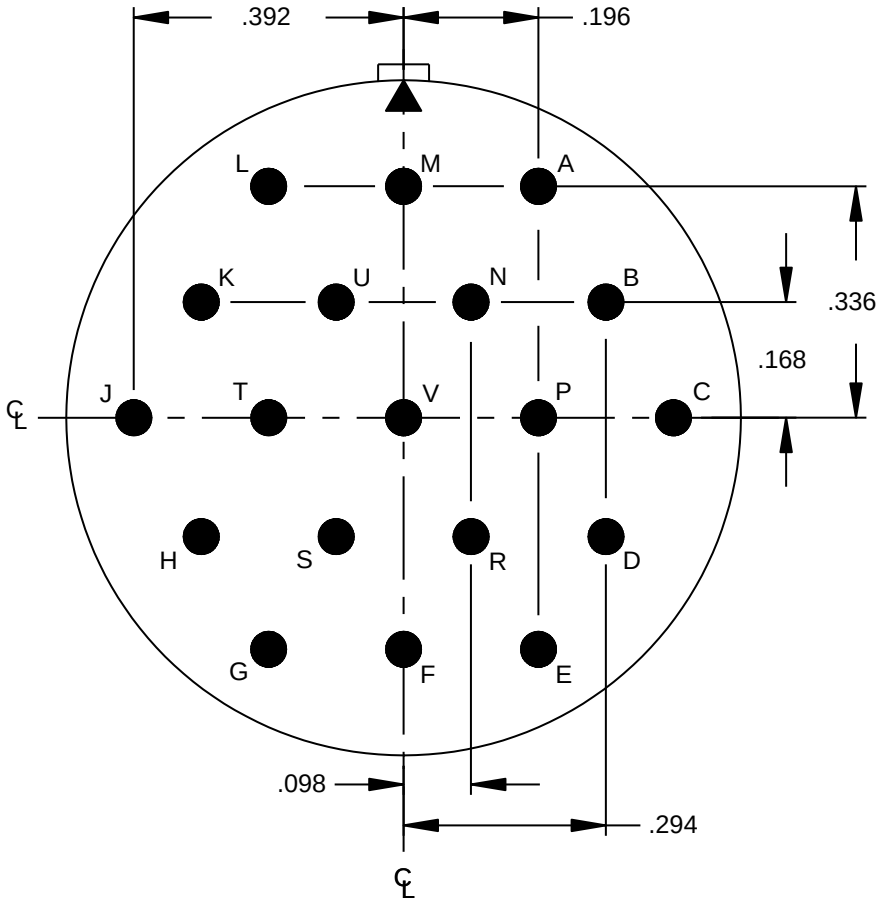

22-14

(Alternate positions X and Y canceled after 26 June 1968 for SAE-AS50151 and MIL-DTL-83723 series II. Active for new design for SAE-AS95234.)

Contacts (Insert arrangement 22-14)		
Contact position ID	Contact location	
	X-axis (mm)	Y-axis (mm)
A	+.196 (4.98)	+.336 (8.53)
B	+.294 (7.47)	+.168 (4.27)
C	+.392 (9.96)	+.000 (0.00)
D	+.294 (7.47)	-.168 (4.27)
E	+.196 (4.98)	-.336 (8.53)
F	+.000 (0.00)	-.336 (8.53)
G	-.196 (4.98)	-.336 (8.53)
H	-.294 (7.47)	-.168 (4.27)
J	-.392 (9.96)	+.000 (0.00)
K	-.294 (7.47)	+.168 (4.27)

Contacts (Insert arrangement 22-14)		
Contact position ID	Contact location	
	X-axis (mm)	Y-axis (mm)
L	-.196 (4.98)	+.336 (8.53)
M	+.000 (0.00)	+.336 (8.53)
N	+.098 (2.49)	+.168 (4.27)
P	+.196 (4.98)	+.000 (0.00)
R	+.098 (2.49)	-.168 (4.27)
S	-.098 (2.49)	-.168 (4.27)
T	-.196 (4.98)	+.000 (0.00)
U	-.098 (2.49)	+.168 (4.27)
V	+.000 (0.00)	+.000 (0.00)
---	---	---

FIGURE 8. Insert arrangement, electrical connector, shell size 22, MIL-DTL-22992, classes C, J and R, MIL-DTL-83723, series II, and SAE-AS50151 and SAE-AS95234 - Continued.

Insert arrangement 22-14						
Shell size	Arrangement number	Number of contacts	Size contacts	Service rating	Contact location	Supersedes
22	-14	19	16	A	All	MS33686-14

Alternate insert positions			
A degrees (A°)			
W	X	Y	Z
80	110	250	280

(Note: Alternate positions X and Y cancelled after 26 June 1968.)

FIGURE 8. Insert arrangement, electrical connector, shell size 22, MIL-DTL-22992, classes C, J and R, MIL-DTL-83723, series II, and SAE-AS50151 and SAE-AS95234 - Continued.

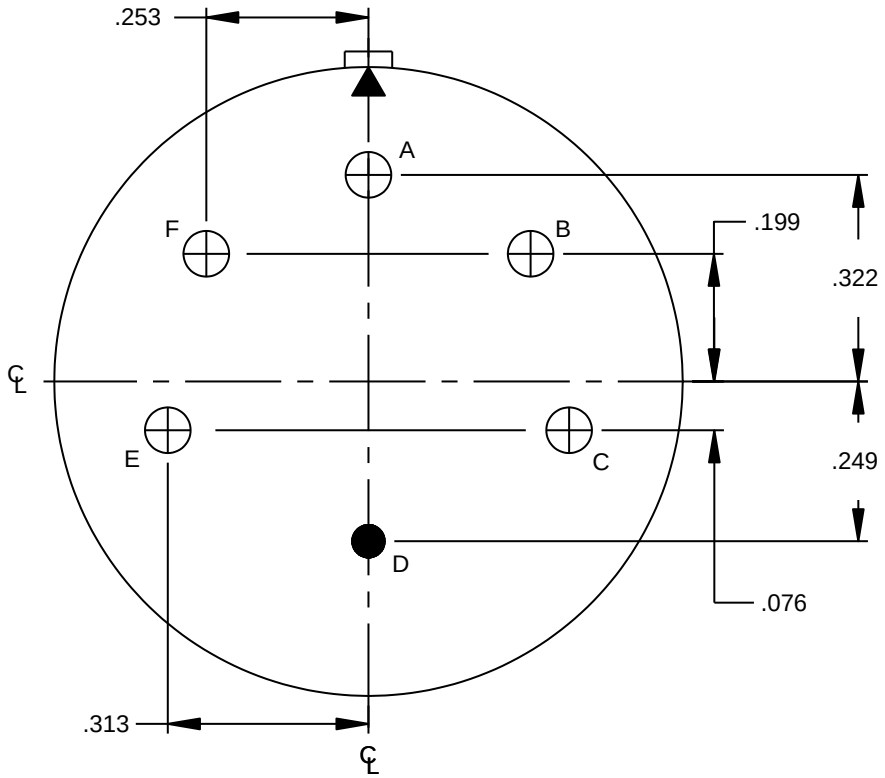

22-15

Contacts (Insert arrangement 22-15)		
Contact position identification (ID)	Contact location	
	X-axis (mm)	Y-axis (mm)
A	+.000 (0.00)	+.322 (8.18)
B	+.253 (6.43)	+.199 (5.05)
C	+.313 (7.95)	-.076 (1.93)
D	+.000 (0.00)	-.249 (6.32)
E	-.313 (7.95)	-.076 (1.93)
F	-.253 (6.43)	+.199 (5.05)

Shell size	Arrangement number	Number of contacts	Size contacts	Service rating	Contact location	Supersedes
22	-15	1	16	D	D	MS33686-15
		5	12	A	All others	

Alternate insert positions			
A degrees (A°)			
W	X	Y	Z
80	110	250	280

FIGURE 8. Insert arrangement, electrical connector, shell size 22, MIL-DTL-22992, classes C, J and R, MIL-DTL-83723, series II, and SAE-AS50151 and SAE-AS95234 - Continued.

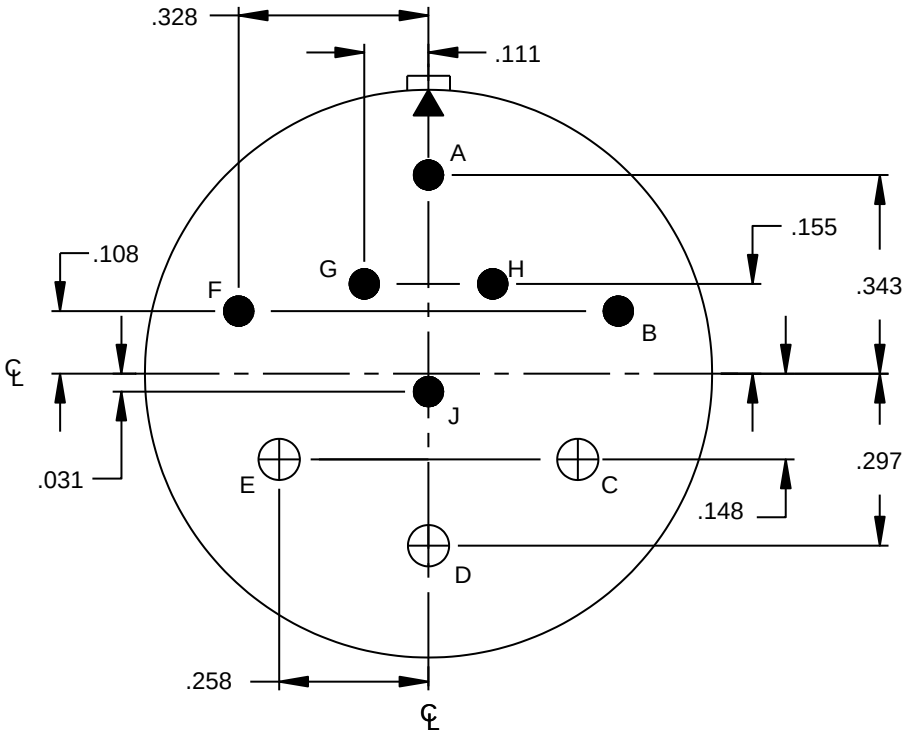

22-16

(Not applicable to MIL-DTL-22992.)

(Inactive for New Design after 13 May 1954 for SAE-AS50151 and MIL-DTL-83723 series II. Active for new design for SAE-AS95234.)

Contacts (Insert arrangement 22-16)		
Contact position ID	Contact location	
	X-axis (mm)	Y-axis (mm)
A	+.000 (0.00)	+.343 (8.71)
B	+.328 (8.33)	+.108 (2.74)
C	+.258 (6.55)	-.148 (3.76)
D	+.000 (0.00)	-.297 (7.54)
E	-.258 (6.55)	-.148 (3.76)

Contacts (Insert arrangement 22-16)		
Contact position ID	Contact location	
	X-axis (mm)	Y-axis (mm)
F	-.328 (8.33)	+.108 (2.74)
G	-.111 (2.82)	+.155 (3.94)
H	+.111 (2.82)	+.155 (3.94)
J	+.000 (0.00)	-.031 (0.79)
---	---	---

Shell size	Arrangement number	Number of contacts	Size contacts	Service rating	Contact location	Supersedes
22	-16	6	16	A	All others	MS33686-16
		3	12		C,D,E	

Alternate insert positions			
A degrees (A°)			
W	X	Y	Z
80	110	250	280

FIGURE 8. Insert arrangement, electrical connector, shell size 22, MIL-DTL-22992, classes C, J and R, MIL-DTL-83723, series II, and SAE-AS50151 and SAE-AS95234 - Continued.

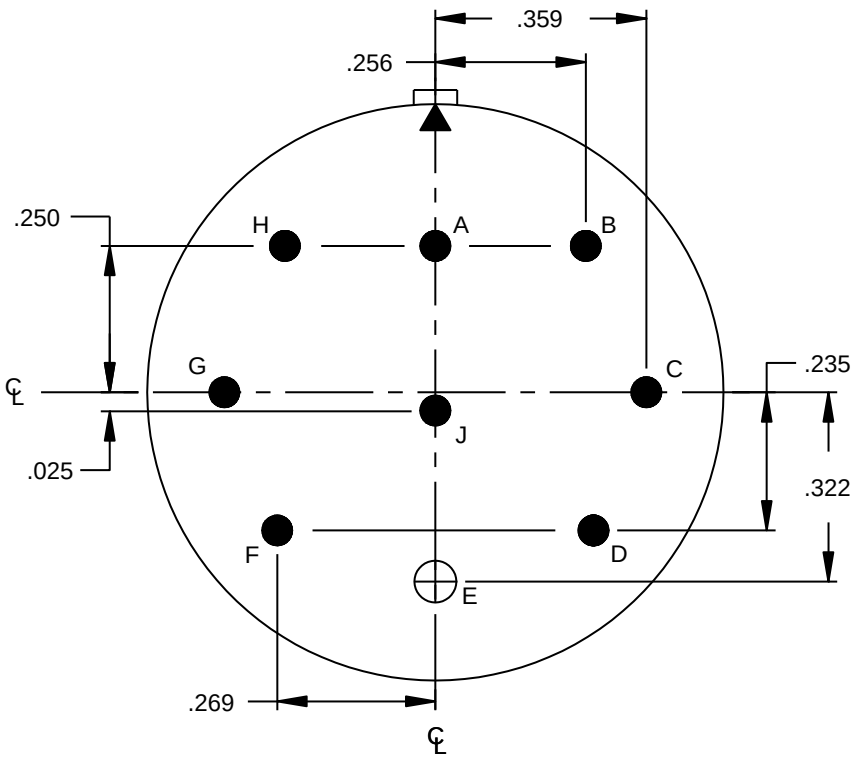

22-17

Contacts (Insert arrangement 22-17)		
Contact position identification (ID)	Contact location	
	X-axis (mm)	Y-axis (mm)
A	+.000 (0.00)	+.250 (6.35)
B	+.256 (6.50)	+.250 (6.35)
C	+.359 (9.12)	+.000 (0.00)
D	+.269 (6.83)	-.235 (5.97)
E	+.000 (0.00)	-.322 (8.18)
F	-.269 (6.83)	-.235 (5.97)
G	-.359 (9.12)	+.000 (0.00)
H	-.256 (6.50)	+.250 (6.35)
J	+.000 (0.00)	-.025 (0.64)

Shell size	Arrangement number	Number of contacts	Size contacts	Service rating	Contact location	Supersedes
22	-17	1	16	D	A	MS33686-17
		7	16	A	B,C,D,F,G,H,J	
		1	12	A	E	

Alternate insert positions			
A degrees (A°)			
W	X	Y	Z
80	110	250	280

FIGURE 8. Insert arrangement, electrical connector, shell size 22, MIL-DTL-22992, classes C, J and R, MIL-DTL-83723, series II, and SAE-AS50151 and SAE-AS95234 - Continued.

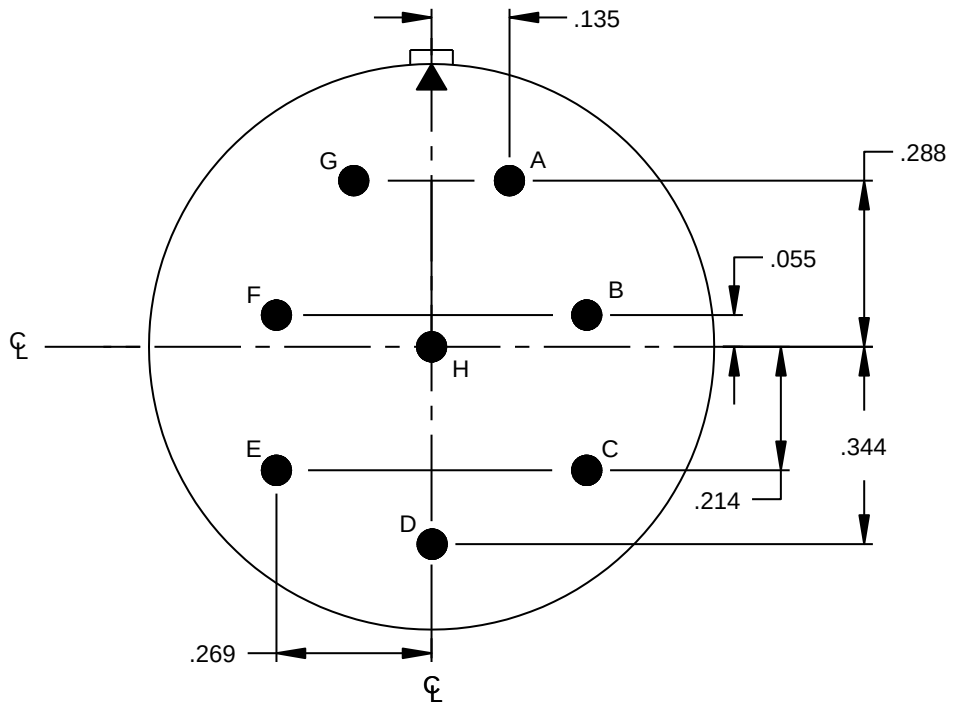

22-18

Contacts (Insert arrangement 22-18)		
Contact position identification (ID)	Contact location	
	X-axis (mm)	Y-axis (mm)
A	+.135 (3.43)	+.288 (7.32)
B	+.269 (6.83)	+.055 (1.40)
C	+.269 (6.83)	-.214 (5.44)
D	+.000 (0.00)	-.344 (8.74)
E	-.269 (6.83)	-.214 (5.44)
F	-.269 (6.83)	+.055 (1.40)
G	-.135 (3.43)	+.288 (7.32)
H	+.000 (0.00)	+.000 (0.00)

Shell size	Arrangement number	Number of contacts	Size contacts	Service rating	Contact location	Supersedes
22	-18	3	16	A	C,D,E	MS33686-18
		5		D	All others	

Alternate insert positions			
A degrees (A°)			
W	X	Y	Z
80	110	250	280

FIGURE 8. Insert arrangement, electrical connector, shell size 22, MIL-DTL-22992, classes C, J and R, MIL-DTL-83723, series II, and SAE-AS50151 and SAE-AS95234 - Continued.

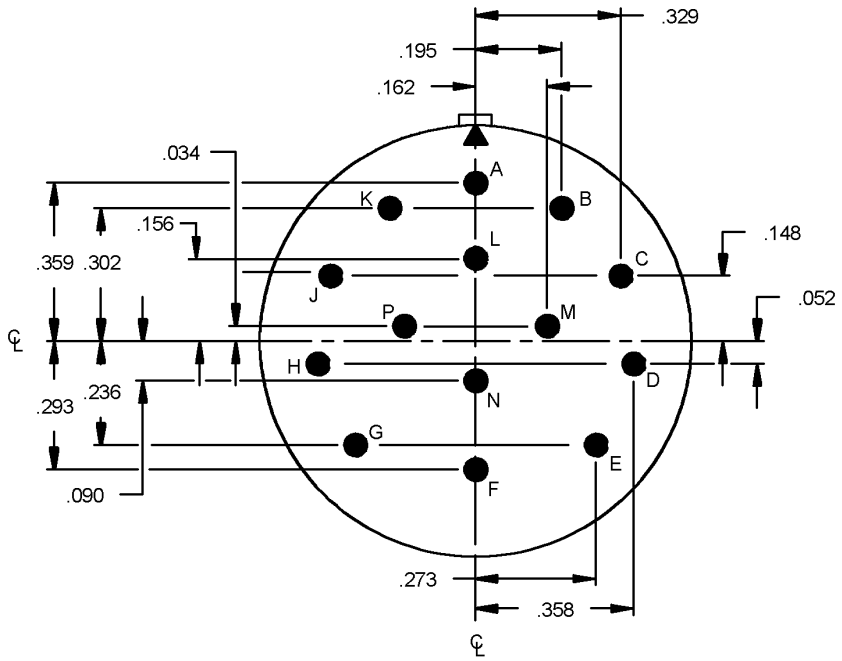

22-19

Contacts (Insert arrangement 22-19)		
Contact position identification (ID)	Contact location	
	X-axis (mm)	Y-axis (mm)
A	+.000 (0.00)	+.359 (9.12)
B	+.195 (4.95)	+.302 (7.67)
C	+.329 (8.36)	+.148 (3.76)
D	+.358 (9.09)	-.052 (1.32)
E	+.273 (6.93)	-.236 (5.99)
F	+.000 (0.00)	-.293 (7.44)
G	-.273 (6.93)	-.236 (5.99)
H	-.358 (9.09)	-.052 (1.32)
J	-.329 (8.36)	+.148 (3.76)
K	-.195 (4.95)	+.302 (7.67)
L	+.000 (0.00)	+.156 (3.96)
M	+.162 (4.11)	+.034 (0.86)
N	+.000 (0.00)	-.090 (2.29)
P	-.162 (4.11)	+.034 (0.86)

Shell size	Arrangement number	Number of contacts	Size contacts	Service rating	Contact location	Supersedes
22	-19	14	16	A	All	MS33686-19

Alternate insert positions			
A degrees (A°)			
W	X	Y	Z
80	110	250	280

FIGURE 8. Insert arrangement, electrical connector, shell size 22, MIL-DTL-22992, classes C, J and R, MIL-DTL-83723, series II, and SAE-AS50151 and SAE-AS95234 - Continued.

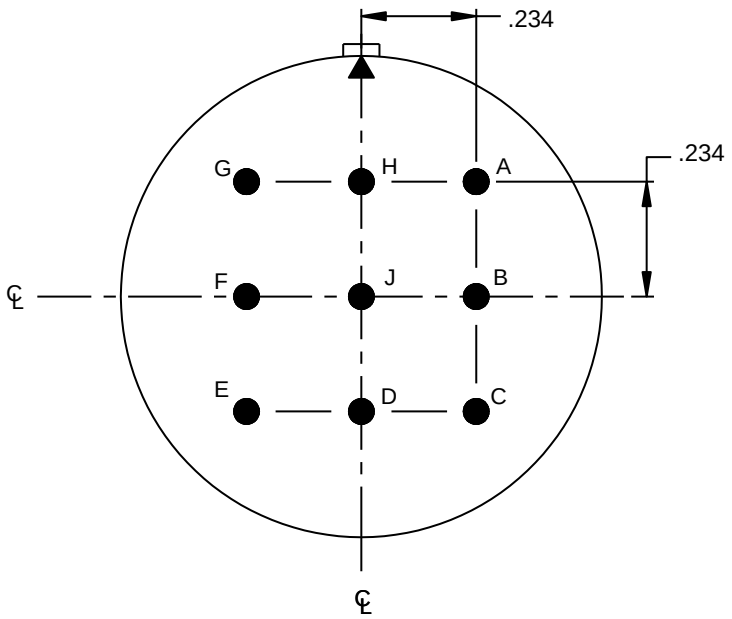

22-20

(Not applicable to MIL-DTL-22992.)

(Inactive for New Design after 13 May 1954 for SAE-AS50151 and MIL-DTL-83723 series II. Active for new design for SAE-AS95234.)

Contacts (Insert arrangement 22-20)		
Contact position identification (ID)	Contact location	
	X-axis (mm)	Y-axis (mm)
A	+.234 (5.94)	+.234 (5.94)
B	+.234 (5.94)	+.000 (0.00)
C	+.234 (5.94)	-.234 (5.94)
D	+.000 (0.00)	-.234 (5.94)
E	-.234 (5.94)	-.234 (5.94)
F	-.234 (5.94)	+.000 (0.00)
G	-.234 (5.94)	+.234 (5.94)
H	+.000 (0.00)	+.234 (5.94)
J	+.000 (0.00)	+.000 (0.00)

Shell size	Arrangement number	Number of contacts	Size contacts	Service rating	Contact location	Supersedes
22	-20	9	16	A	All	MS33686-20

Alternate insert positions			
A degrees (A°)			
W	X	Y	Z
35	110	250	325

FIGURE 8. Insert arrangement, electrical connector, shell size 22, MIL-DTL-22992, classes C, J and R, MIL-DTL-83723, series II, and SAE-AS50151 and SAE-AS95234 - Continued.

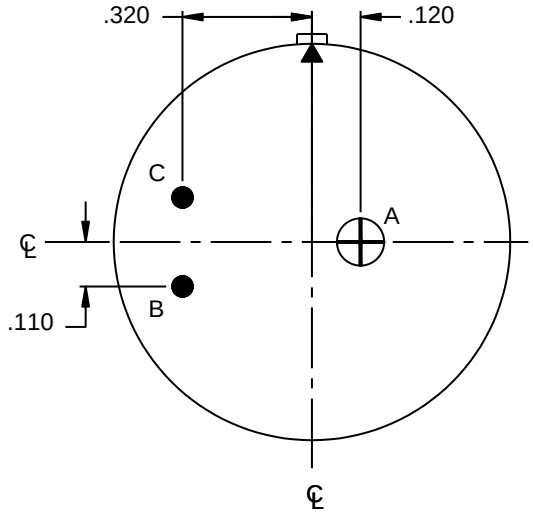

22-21

Contacts (Insert arrangement 22-21)		
Contact position identification (ID)	Contact location	
	X-axis (mm)	Y-axis (mm)
A	+.120 (3.05)	+.000 (0.00)
B	-.320 (8.13)	-.110 (2.79)
C	-.320 (8.13)	+.110 (2.79)

Shell size	Arrangement number	Number of contacts	Size contacts	Service rating	Contact location	Supersedes
22	-21	2	16	A	B, C	MS33686-21
		1	0		A	

Alternate insert positions			
A degrees (A°)			
W	X	Y	Z
80	110	250	280

FIGURE 8. Insert arrangement, electrical connector, shell size 22, MIL-DTL-22992, classes C, J and R, MIL-DTL-83723, series II, and SAE-AS50151 and SAE-AS95234 - Continued.

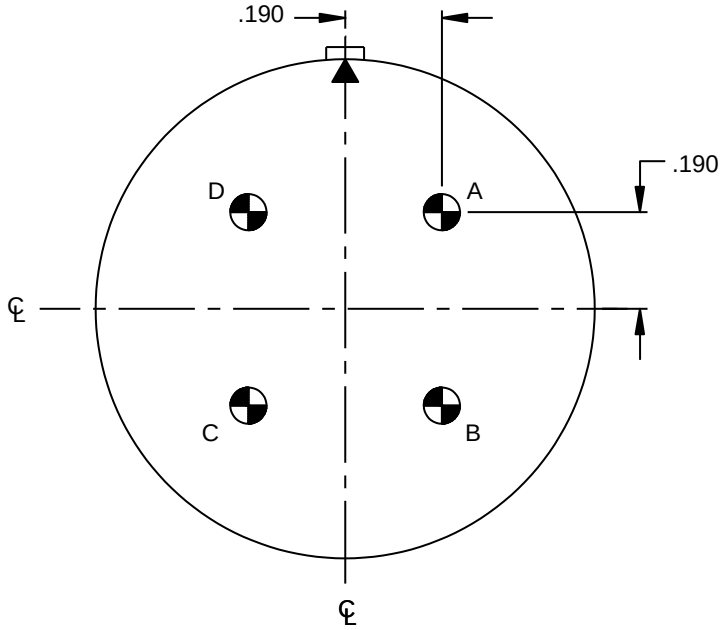

22-22

Contacts (Insert arrangement 22-22)		
Contact position identification (ID)	Contact location	
	X-axis (mm)	Y-axis (mm)
A	+.190 (4.83)	+.190 (4.83)
B	+.190 (4.83)	-.190 (4.83)
C	-.190 (4.83)	-.190 (4.83)
D	-.190 (4.83)	+.190 (4.83)

Shell size	Arrangement number	Number of contacts	Size contacts	Service rating	Contact location	Supersedes
22	-22	4	8	A	All	MS33686-22

Alternate insert positions			
A degrees (A°)			
W	X	Y	Z
---	110	250	---

FIGURE 8. Insert arrangement, electrical connector, shell size 22, MIL-DTL-22992, classes C, J and R, MIL-DTL-83723, series II, and SAE-AS50151 and SAE-AS95234 - Continued.

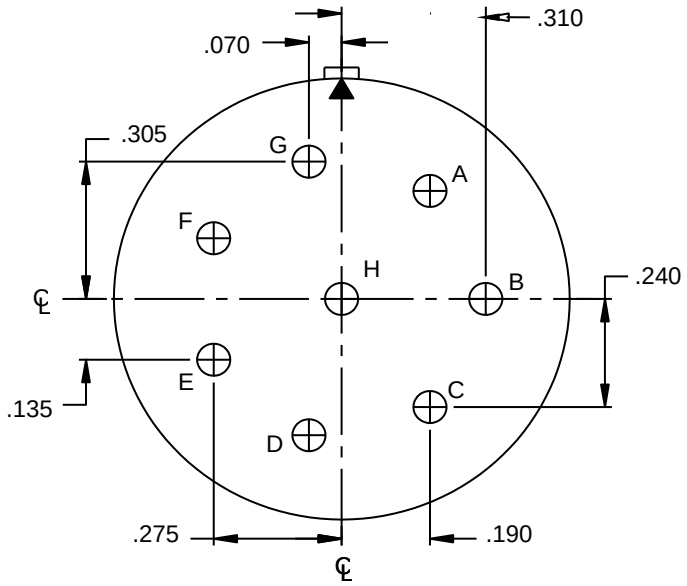

22-23

Contacts (Insert arrangement 22-23)		
Contact position identification (ID)	Contact location	
	X-axis (mm)	Y-axis (mm)
A	+.190 (4.83)	+.240 (6.10)
B	+.310 (7.87)	+.000 (0.00)
C	+.190 (4.83)	-.240 (6.10)
D	-.070 (1.78)	-.305 (7.75)
E	-.275 (6.99)	-.135 (3.43)
F	-.275 (6.99)	+.135 (3.43)
G	-.070 (1.78)	+.305 (7.75)
H	+.000 (0.00)	+.000 (0.00)

Shell size	Arrangement number	Number of contacts	Size contacts	Service rating	Contact location	Supersedes
22	-23	1	12	D	H	MS33686-23
		7	12	A	All others	

Alternate insert positions			
A degrees (A°)			
W	X	Y	Z
35	---	250	---

FIGURE 8. Insert arrangement, electrical connector, shell size 22, MIL-DTL-22992, classes C, J and R, MIL-DTL-83723, series II, and SAE-AS50151 and SAE-AS95234 - Continued.

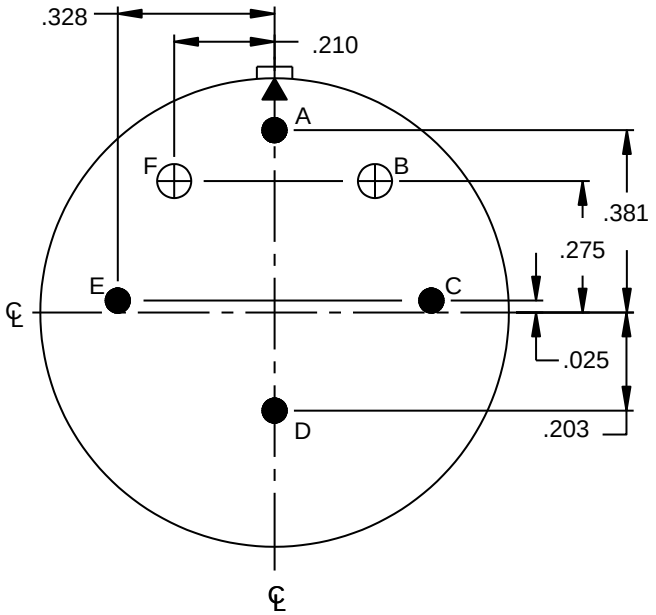

22-24

(Not applicable to MIL-DTL-22992.)

(Inactive for New Design after 13 May 1954 for SAE-AS50151 and MIL-DTL-83723 series II. Active for new design for SAE-AS95234.)

Contacts (Insert arrangement 22-24)		
Contact position identification (ID)	Contact location	
	X-axis (mm)	Y-axis (mm)
A	+.000 (0.00)	+.381 (9.68)
B	+.210 (5.33)	+.275 (6.99)
C	+.328 (8.33)	+.025 (0.64)
D	+.000 (0.00)	-.203 (5.16)
E	-.328 (8.33)	+.025 (0.64)
F	-.210 (5.33)	+.275 (6.99)

Shell size	Arrangement number	Number of contacts	Size contacts	Service rating	Contact location	Supersedes
22	-24	3	16	D	C,D,E	MS33686-24
		1	16	A	A	
		2	12	A	B,F	

Alternate insert positions			
A degrees (A°)			
W	X	Y	Z
80	110	250	280

FIGURE 8. Insert arrangement, electrical connector, shell size 22, MIL-DTL-22992, classes C, J and R, MIL-DTL-83723, series II, and SAE-AS50151 and SAE-AS95234 - Continued.

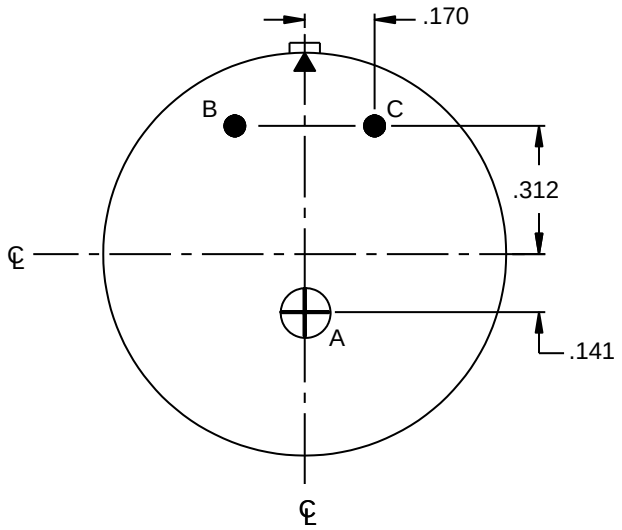

22-25

(Not applicable to MIL-DTL-22992.)

(Inactive for New Design after 31 July 1951 for SAE-AS50151 and MIL-DTL-83723 series II. Active for new design for SAE-AS95234.)

Contacts (Insert arrangement 22-25)		
Contact position identification (ID)	Contact location	
	X-axis (mm)	Y-axis (mm)
A	+.000 (0.00)	-.141 (3.58)
B	-.170 (4.32)	+.312 (7.92)
C	+.170 (4.32)	+.312 (7.92)

Shell size	Arrangement number	Number of contacts	Size contacts	Service rating	Contact location	Supersedes
22	-25	2	16	A	B, C	MS33686-25
		1	0		A	

Alternate insert positions			
A degrees (A°)			
W	X	Y	Z
80	110	250	280

FIGURE 8. Insert arrangement, electrical connector, shell size 22, MIL-DTL-22992, classes C, J and R, MIL-DTL-83723, series II, and SAE-AS50151 and SAE-AS95234 - Continued.

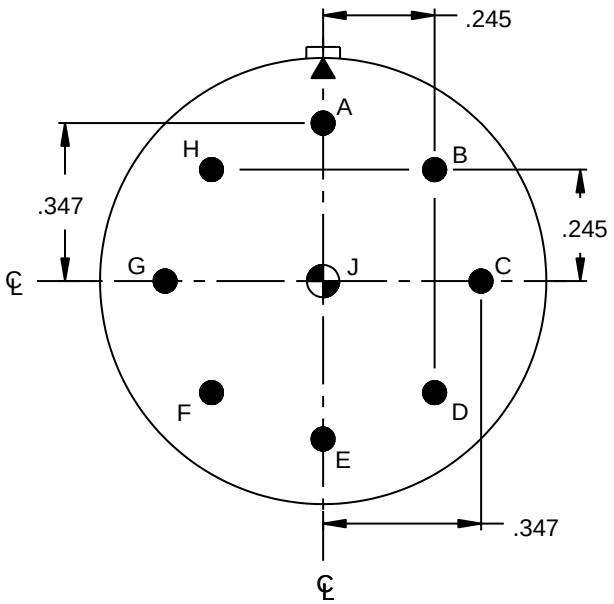

22-27

Contacts (Insert arrangement 22-27)		
Contact position identification (ID)	Contact location	
	X-axis (mm)	Y-axis (mm)
A	+.000 (0.00)	+.347 (8.81)
B	+.245 (6.22)	+.245 (6.22)
C	+.347 (8.81)	+.000 (0.00)
D	+.245 (6.22)	-.245 (6.22)
E	+.000 (0.00)	-.347 (8.81)
F	-.245 (6.22)	-.245 (6.22)
G	-.347 (8.81)	+.000 (0.00)
H	-.245 (6.22)	+.245 (6.22)
J	+.000 (0.00)	+.000 (0.00)

Shell size	Arrangement number	Number of contacts	Size contacts	Service rating	Contact location	Supersedes
22	-27	1	8	D	J	MS33686-27
		8	16	A	All others	

Alternate insert positions			
A degrees (A°)			
W	X	Y	Z
80	---	250	280

FIGURE 8. Insert arrangement, electrical connector, shell size 22, MIL-DTL-22992, classes C, J and R, MIL-DTL-83723, series II, and SAE-AS50151 and SAE-AS95234 - Continued.

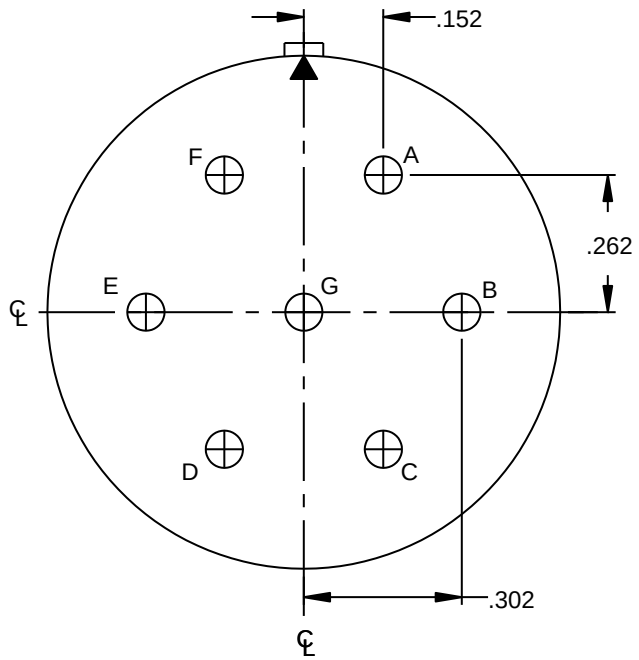

22-28

(Not applicable to MIL-DTL-22992.)

(Inactive for New Design after 13 May 1954 for SAE-AS50151 and MIL-DTL-83723 series II. Active for new design for SAE-AS95234.)

Contacts (Insert arrangement 22-28)		
Contact position identification (ID)	Contact location	
	X-axis (mm)	Y-axis (mm)
A	+.152 (3.86)	+.262 (6.65)
B	+.302 (7.67)	+.000 (0.00)
C	+.152 (3.86)	-.262 (6.65)
D	-.152 (3.86)	-.262 (6.65)
E	-.302 (7.67)	+.000 (0.00)
F	-.152 (3.86)	+.262 (6.65)
G	+.000 (0.00)	+.000 (0.00)

Shell size	Arrangement number	Number of contacts	Size contacts	Service rating	Contact location	Supersedes
22	-28	7	12	A	All	MS33686-28

Alternate insert positions			
A degrees (A°)			
W	X	Y	Z
80	---	---	280

FIGURE 8. Insert arrangement, electrical connector, shell size 22, MIL-DTL-22992, classes C, J and R, MIL-DTL-83723, series II, and SAE-AS50151 and SAE-AS95234 - Continued.

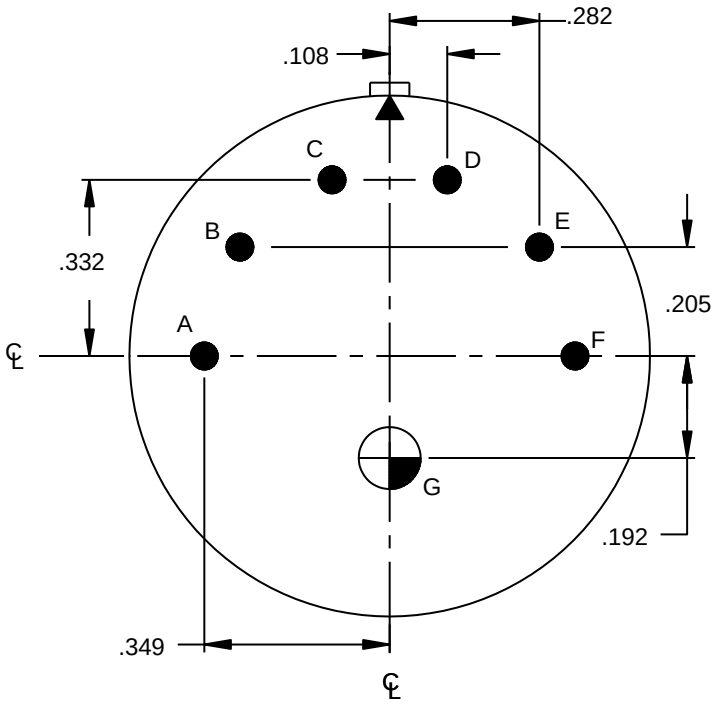

22-29

(Not applicable to MIL-DTL-22992.)

(Inactive for New Design after 17 Dec 1958 for SAE-AS50151 and MIL-DTL-83723 series II. Active for new design for SAE-AS95234.)

Contacts (Insert arrangement 22-29)		
Contact position identification (ID)	Contact location	
	X-axis (mm)	Y-axis (mm)
A	-.349 (8.86)	+.000 (0.00)
B	-.282 (7.16)	+.205 (5.21)
C	-.108 (2.74)	+.332 (8.43)
D	+.108 (2.74)	+.332 (8.43)
E	+.282 (7.16)	+.205 (5.21)
F	+.349 (8.86)	+.000 (0.00)
G	+.000 (0.00)	-.192 (4.88)

Shell size	Arrangement number	Number of contacts	Size contacts	Service rating	Contact location	Supersedes
22	-29	6	16	A	All others	MS33686-29
		1	4	A	G	

Alternate insert positions			
A degrees (A°)			
W	X	Y	Z
80	110	250	280

FIGURE 8. Insert arrangement, electrical connector, shell size 22, MIL-DTL-22992, classes C, J and R, MIL-DTL-83723, series II, and SAE-AS50151 and SAE-AS95234 - Continued.

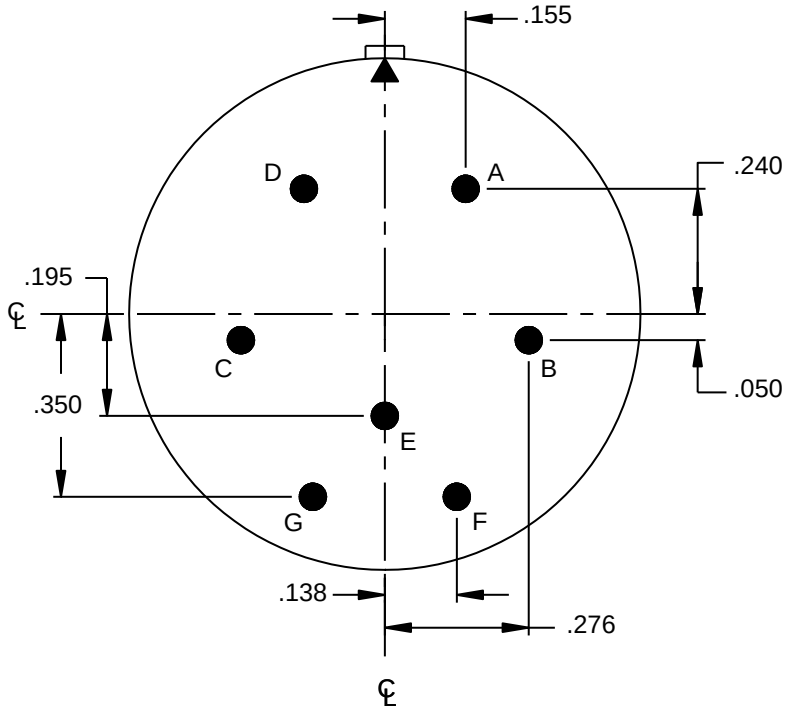

22-33

(Not applicable to MIL-DTL-22992.)

(Inactive for New Design after 13 May 1954 for SAE-AS50151 and MIL-DTL-83723 series II. Active for new design for SAE-AS95234.)

Contacts (Insert arrangement 22-33)		
Contact position identification (ID)	Contact location	
	X-axis (mm)	Y-axis (mm)
A	+.155 (3.94)	+.240 (6.10)
B	+.276 (7.01)	-.050 (0.00)
C	-.276 (7.01)	-.050 (0.00)
D	-.155 (3.94)	+.240 (6.10)
E	+.000 (0.00)	-.195 (4.95)
F	+.138 (3.51)	-.350 (8.89)
G	-.138 (3.51)	-.350 (8.89)

Shell size	Arrangement number	Number of contacts	Size contacts	Service rating	Contact location	Supersedes
22	-33	3	16	A	E,F,G	MS33686-33
		4	16	D	A,B,C,D	

Alternate insert positions			
A degrees (A°)			
W	X	Y	Z
80	110	250	280

FIGURE 8. Insert arrangement, electrical connector, shell size 22, MIL-DTL-22992, classes C, J and R, MIL-DTL-83723, series II, and SAE-AS50151 and SAE-AS95234 - Continued.

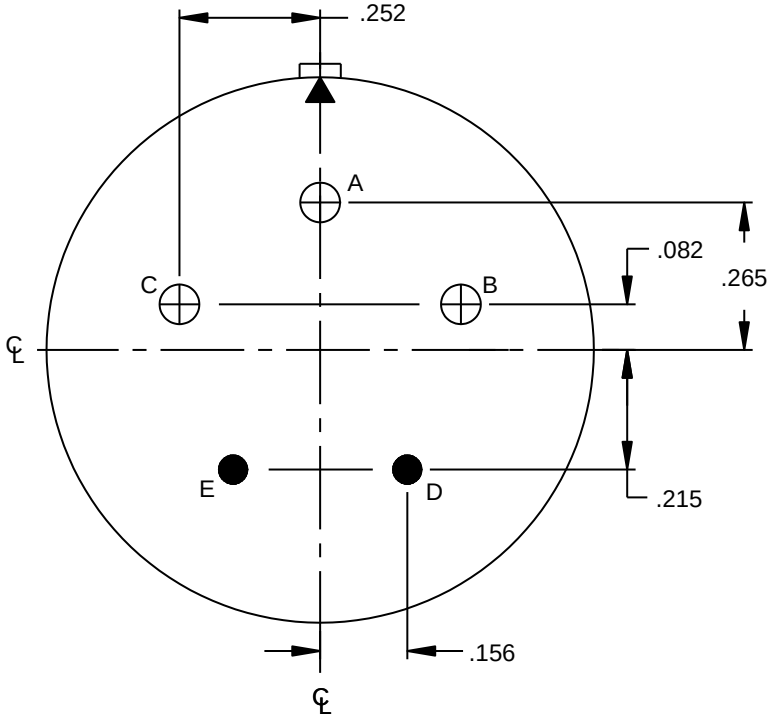

22-34

(Not applicable to MIL-DTL-22992.)

(Inactive for New Design after 17 Dec 1958 for SAE-AS50151 and MIL-DTL-83723 series II. Active for new design for SAE-AS95234.)

Contacts (Insert arrangement 22-34)		
Contact position identification (ID)	Contact location	
	X-axis (mm)	Y-axis (mm)
A	+.000 (0.00)	+.265 (6.73)
B	+.252 (6.40)	+.082 (2.08)
C	-.252 (6.40)	+.082 (2.08)
D	+.156 (3.96)	-.215 (5.46)
E	-.156 (3.96)	-.215 (5.46)

Shell size	Arrangement number	Number of contacts	Size contacts	Service rating	Contact location	Supersedes
22	-34	2	16	D	D,E	MS33686-34
		3	12	D	A,B,C	

Alternate insert positions			
A degrees (A°)			
W	X	Y	Z
80	110	250	280

FIGURE 8. Insert arrangement, electrical connector, shell size 22, MIL-DTL-22992, classes C, J and R, MIL-DTL-83723, series II, and SAE-AS50151 and SAE-AS95234 - Continued.

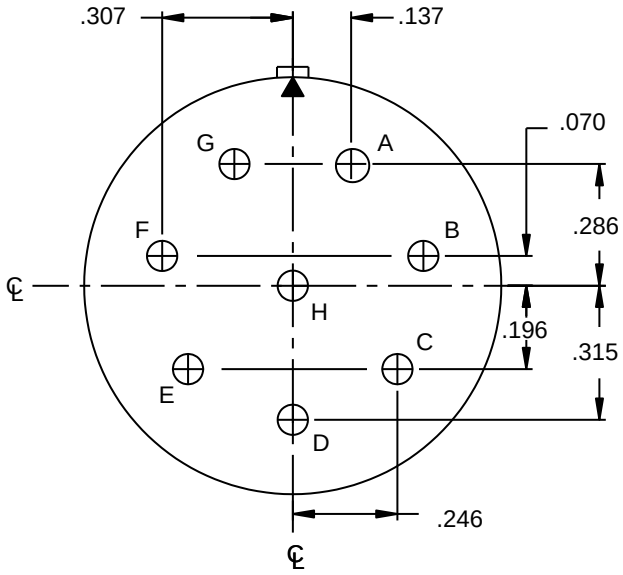

22-36

CONTACTS A, C, E AND G – IRON
CONTACTS B, D, F AND H – COPPER-NICKEL ALLOY

Contacts (Insert arrangement 22-36)		
Contact position identification (ID)	Contact location	
	X-axis (mm)	Y-axis (mm)
A	+.137 (3.48)	+.286 (7.26)
B	+.307 (7.80)	+.070 (1.78)
C	+.246 (6.25)	-.196 (4.98)
D	+.000 (0.00)	-.315 (8.00)
E	-.246 (6.25)	-.196 (4.98)
F	-.307 (7.80)	+.070 (1.78)
G	-.137 (3.48)	+.286 (7.26)
H	+.000 (0.00)	+.000 (0.00)

Shell size	Arrangement number	Number of contacts	Size contacts	Service rating	Contact location	Supersedes
22	-36	1	12	D	H	MS33686-36
		7	12	A	All others	

Alternate insert positions			
A degrees (A°)			
W	X	Y	Z
90	---	270	---

FIGURE 8. Insert arrangement, electrical connector, shell size 22, MIL-DTL-22992, classes C, J and R, MIL-DTL-83723, series II, and SAE-AS50151 and SAE-AS95234 - Continued.

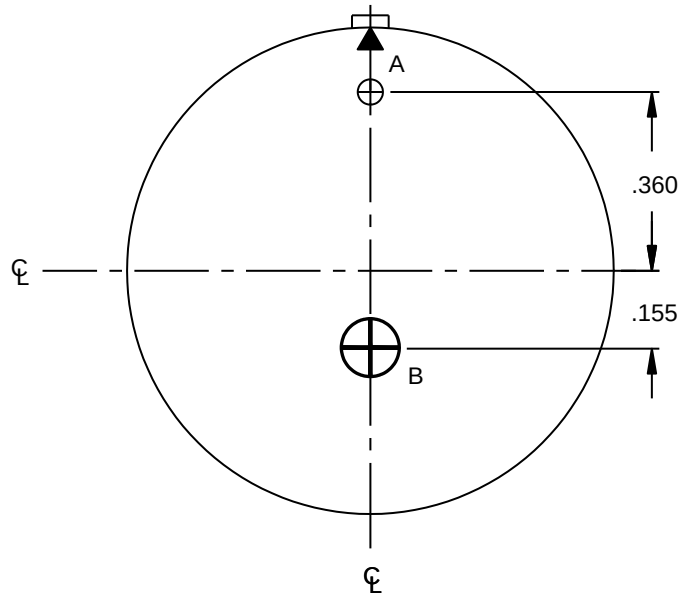

24-1

(Not applicable to MIL-DTL-22992.)

(Inactive for New Design after 17 Dec 1958 for SAE-AS50151 and MIL-DTL-83723 series II. Active for new design for SAE-AS95234.)

Contacts (Insert arrangement 24-1)		
Contact position identification (ID)	Contact location	
	X-axis (mm)	Y-axis (mm)
A	+.000 (0.00)	+.360 (9.14)
B	+.000 (0.00)	-.155 (3.94)

Shell size	Arrangement number	Number of contacts	Size contacts	Service rating	Contact location	Supersedes
24	-1	1	12	D	A	MS33687-1
		1	0	D	B	

Alternate insert positions			
A degrees (A°)			
W	X	Y	Z
80	110	250	280

FIGURE 9. Insert arrangement, electrical connector, shell size 24, MIL-DTL-22992, classes C, J and R, MIL-DTL-83723, series II, SAE-AS50151 and SAE-AS95234.

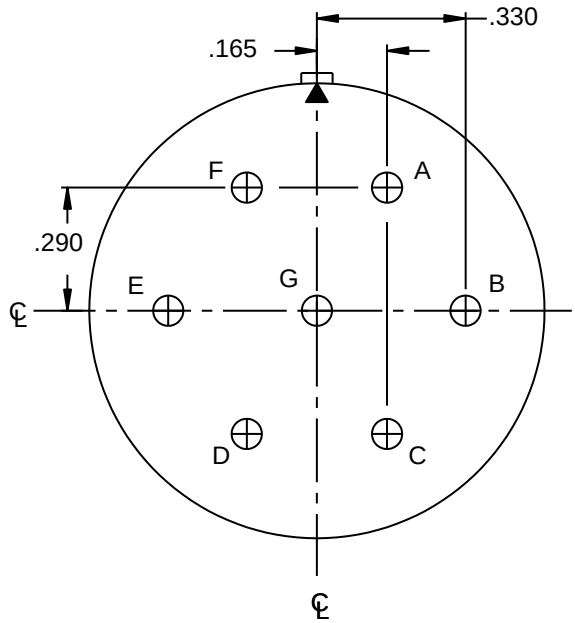

24-2

Contacts (Insert arrangement 24-2)		
Contact position identification (ID)	Contact location	
	X-axis (mm)	Y-axis (mm)
A	+.165 (4.19)	+.290 (7.37)
B	+.330 (8.38)	+.000 (0.00)
C	+.165 (4.19)	-.290 (7.37)
D	-.165 (4.19)	-.290 (7.37)
E	-.330 (8.38)	+.000 (0.00)
F	-.165 (4.19)	+.290 (7.37)
G	+.000 (0.00)	+.000 (0.00)

Shell size	Arrangement number	Number of contacts	Size contacts	Service rating	Contact location	Supersedes
24	-2	7	12	D	All	MS33687-2

Alternate insert positions			
A degrees (A°)			
W	X	Y	Z
80	---	---	280

FIGURE 9. Insert arrangement, electrical connector, shell size 24, MIL-DTL-22992, classes C, J and R, MIL-DTL-83723, series II, SAE-AS50151 and SAE-AS95234 – Continued.

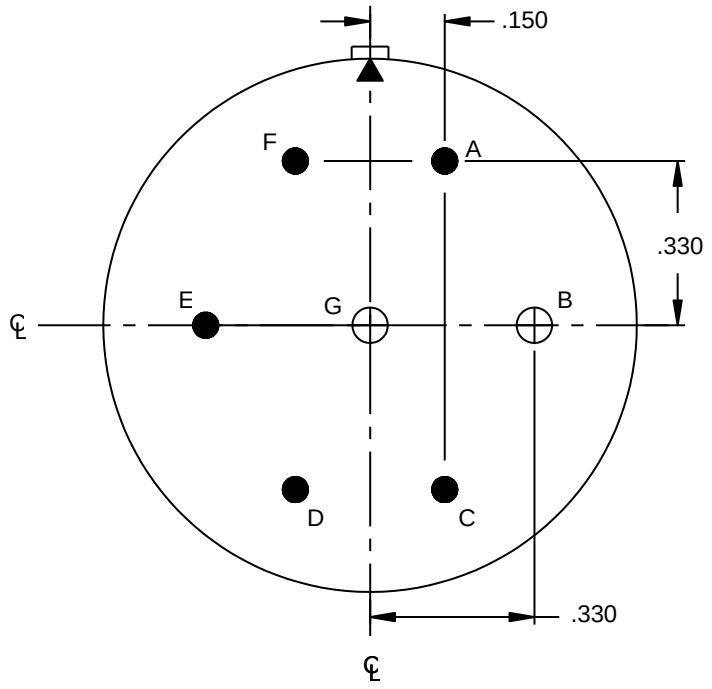

24-3

(Not applicable to MIL-DTL-22992.)

(Inactive for New Design after 13 May 1954 for SAE-AS50151 and MIL-DTL-83723 series II. Active for new design for SAE-AS95234.)

Contacts (Insert arrangement 24-3)		
Contact position identification (ID)	Contact location	
	X-axis (mm)	Y-axis (mm)
A	+.150 (3.81)	+.330 (8.38)
B	+.330 (8.38)	+.000 (0.00)
C	+.150 (3.81)	-.330 (8.38)
D	-.150 (3.81)	-.330 (8.38)
E	-.330 (8.38)	+.000 (0.00)
F	-.150 (3.81)	+.330 (8.38)
G	+.000 (0.00)	+.000 (0.00)

Shell size	Arrangement number	Number of contacts	Size contacts	Service rating	Contact location	Supersedes
24	-3	5	16	D	A,C,D,E,F	MS33687-3
		2	12	D	B,G	

Alternate insert positions			
A degrees (A°)			
W	X	Y	Z
80	110	250	280

FIGURE 9. Insert arrangement, electrical connector, shell size 24, MIL-DTL-22992, classes C, J and R, MIL-DTL-83723, series II, SAE-AS50151 and SAE-AS95234 – Continued.

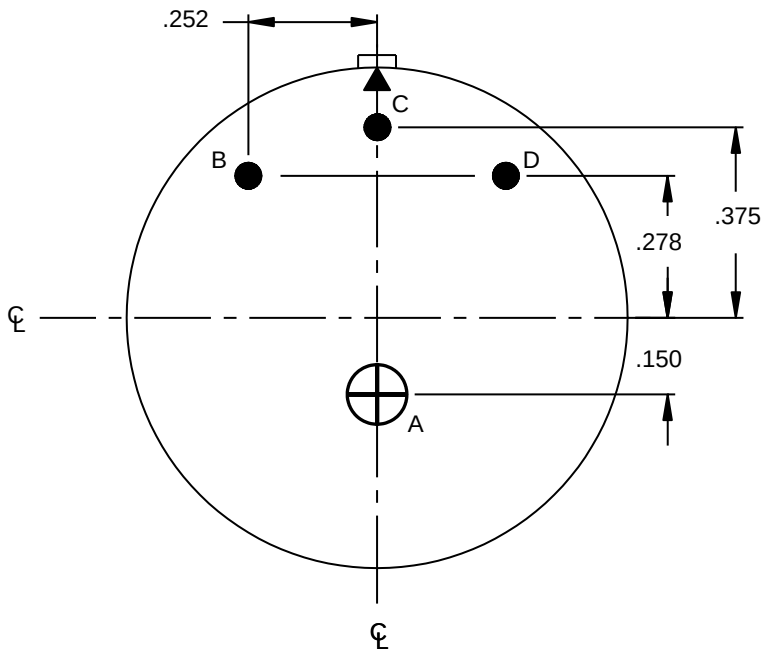

24-4

(Not applicable to MIL-DTL-22992.)

Contacts (Insert arrangement 24-4)		
Contact position identification (ID)	Contact location	
	X-axis (mm)	Y-axis (mm)
A	+.000 (0.00)	-.150 (3.81)
B	-.252 (6.40)	+.278 (7.06)
C	+.000 (0.00)	+.375 (9.53)
D	+.252 (6.40)	+.278 (7.06)

Shell size	Arrangement number	Number of contacts	Size contacts	Service rating	Contact location	Supersedes
24	-4	3	16	D	B,C,D	MS33687-4
		1	0	D	A	

Alternate insert positions			
A degrees (A°)			
W	X	Y	Z
80	110	250	280

FIGURE 9. Insert arrangement, electrical connector, shell size 24, MIL-DTL-22992, classes C, J and R, MIL-DTL-83723, series II, SAE-AS50151 and SAE-AS95234 – Continued.

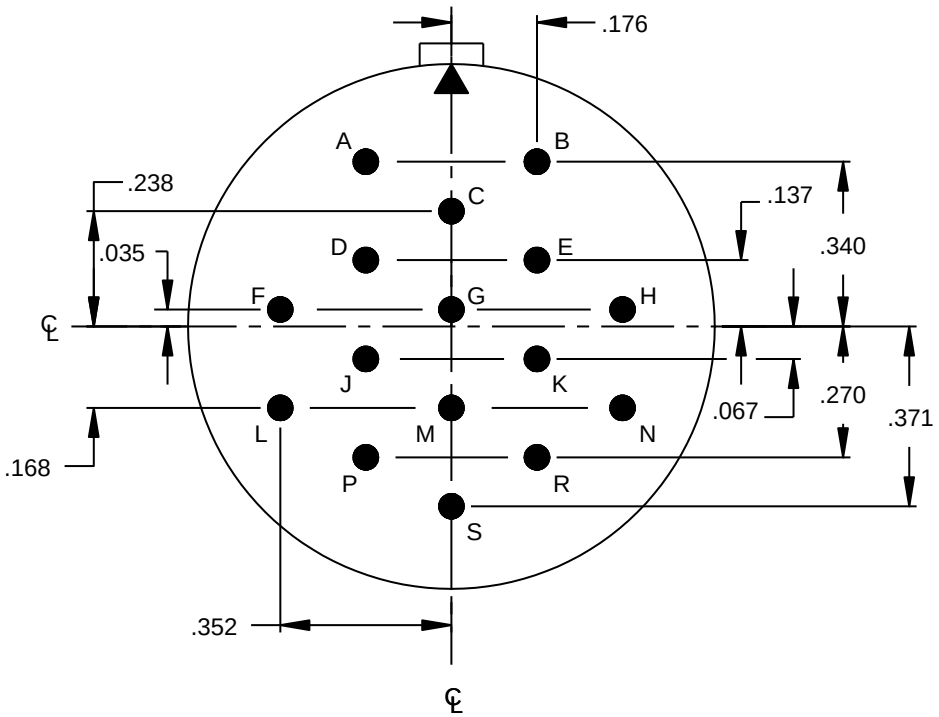

24-5

(Not applicable to MIL-DTL-22992.)

Contacts (Insert arrangement 24-5)		
Contact position ID	Contact location	
	X-axis (mm)	Y-axis (mm)
A	-.176 (4.47)	+.340 (8.64)
B	+.176 (4.47)	+.340 (8.64)
C	+.000 (0.00)	+.238 (6.05)
D	-.176 (4.47)	+.137 (3.48)
E	+.176 (4.47)	+.137 (3.48)
F	-.352 (8.94)	+.035 (0.89)
G	+.000 (0.00)	+.035 (0.89)
H	+.352 (8.94)	+.035 (0.89)

Contacts (Insert arrangement 24-5)		
Contact position ID	Contact location	
	X-axis (mm)	Y-axis (mm)
J	-.176 (4.47)	-.067 (1.70)
K	+.176 (4.47)	-.067 (1.70)
L	-.352 (8.94)	-.168 (4.27)
M	+.000 (0.00)	-.168 (4.27)
N	+.352 (8.94)	-.168 (4.27)
P	-.176 (4.47)	-.270 (6.86)
R	+.176 (4.47)	-.270 (6.86)
S	+.000 (0.00)	-.371 (9.42)

Shell size	Arrangement number	Number of contacts	Size contacts	Service rating	Contact location	Supersedes
24	-5	16	16	A	All	MS33687-5

Alternate insert positions			
A degrees (A°)			
W	X	Y	Z
80	110	250	280

FIGURE 9. Insert arrangement, electrical connector, shell size 24, MIL-DTL-22992, classes C, J and R, MIL-DTL-83723, series II, SAE-AS50151 and SAE-AS95234 – Continued.

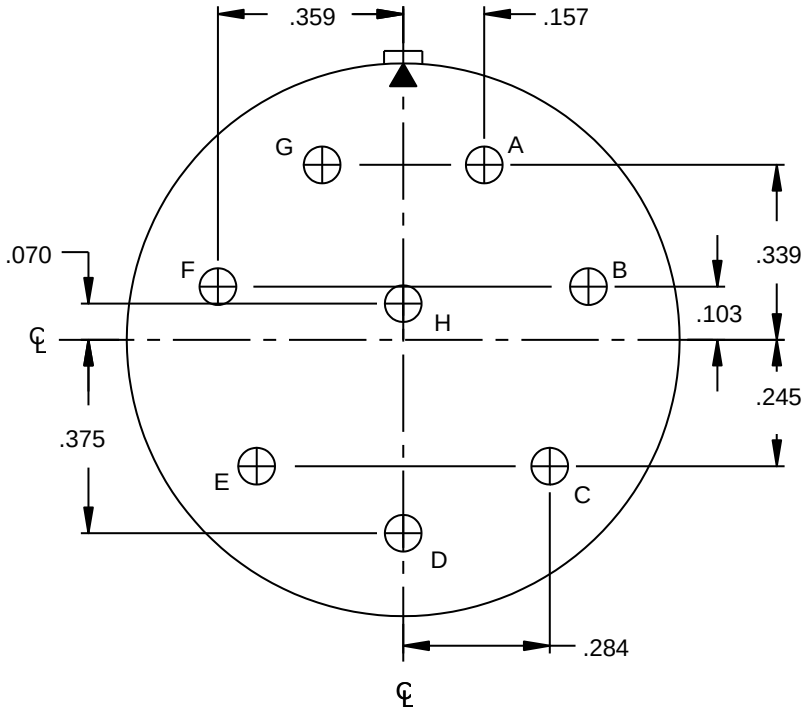

24-6

Contacts (Insert arrangement 24-6)		
Contact position identification (ID)	Contact location	
	X-axis (mm)	Y-axis (mm)
A	+.157 (3.99)	+.339 (8.61)
B	+.359 (9.12)	+.103 (2.62)
C	+.284 (7.21)	-.245 (6.22)
D	+.000 (0.00)	-.375 (9.53)
E	-.284 (7.21)	-.245 (6.22)
F	-.359 (9.12)	+.103 (2.62)
G	-.157 (3.99)	+.339 (8.61)
H	+.000 (0.00)	+.070 (1.78)

Shell size	Arrangement number	Number of contacts	Size contacts	Service rating	Contact location	Supersedes
24	-6	3	12	D	A,G,H	MS33687-6
		5	12	A	All others	

Alternate insert positions			
A degrees (A°)			
W	X	Y	Z
80	110	250	280

FIGURE 9. Insert arrangement, electrical connector, shell size 24, MIL-DTL-22992, classes C, J and R, MIL-DTL-83723, series II, SAE-AS50151 and SAE-AS95234 – Continued.

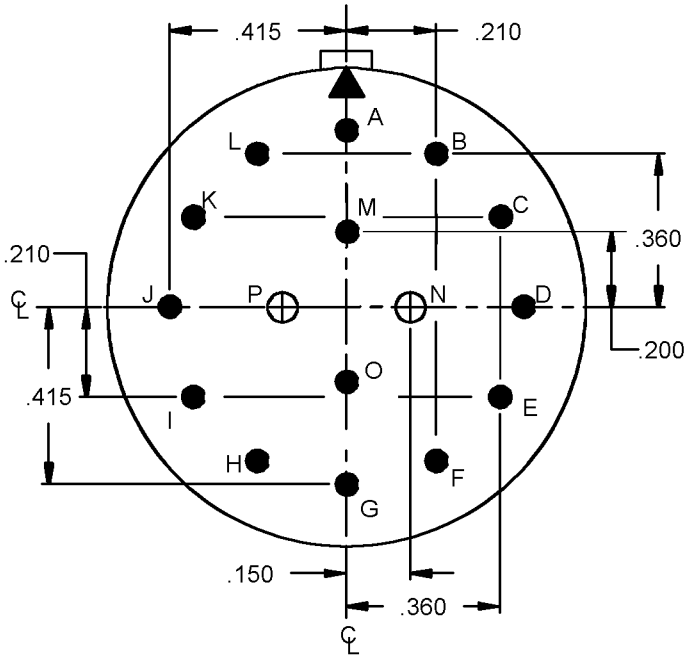

24-7

Contacts (Insert arrangement 24-7)		
Contact position ID	Contact location	
	X-axis (mm)	Y-axis (mm)
A	+.000 (0.00)	+.415 (10.54)
B	+.210 (5.33)	+.360 (9.14)
C	+.360 (9.14)	+.210 (5.33)
D	+.415 (10.54)	+.000 (0.00)
E	+.360 (9.14)	-.210 (5.33)
F	+.210 (5.33)	-.360 (9.14)
G	+.000 (0.00)	-.415 (10.54)
H	-.210 (5.33)	-.360 (9.14)

Contacts (Insert arrangement 24-7)		
Contact position ID	Contact location	
	X-axis (mm)	Y-axis (mm)
I	-.360 (9.14)	-.210 (5.33)
J	-.415 (10.54)	+.000 (0.00)
K	-.360 (9.14)	+.210 (5.33)
L	-.210 (5.33)	+.360 (9.14)
M	+.000 (0.00)	+.200 (5.08)
N	+.150 (3.81)	+.000 (0.00)
O	+.000 (0.00)	-.200 (5.08)
P	-.150 (3.81)	+.000 (0.00)

Shell size	Arrangement number	Number of contacts	Size contacts	Service rating	Contact location	Supersedes
24	-7	14	16	A	All others	MS33687-7
		2	12		P,N	

Alternate insert positions			
A degrees (A°)			
W	X	Y	Z
80	110	250	280

FIGURE 9. Insert arrangement, electrical connector, shell size 24, MIL-DTL-22992, classes C, J and R, MIL-DTL-83723, series II, SAE-AS50151 and SAE-AS95234 – Continued.

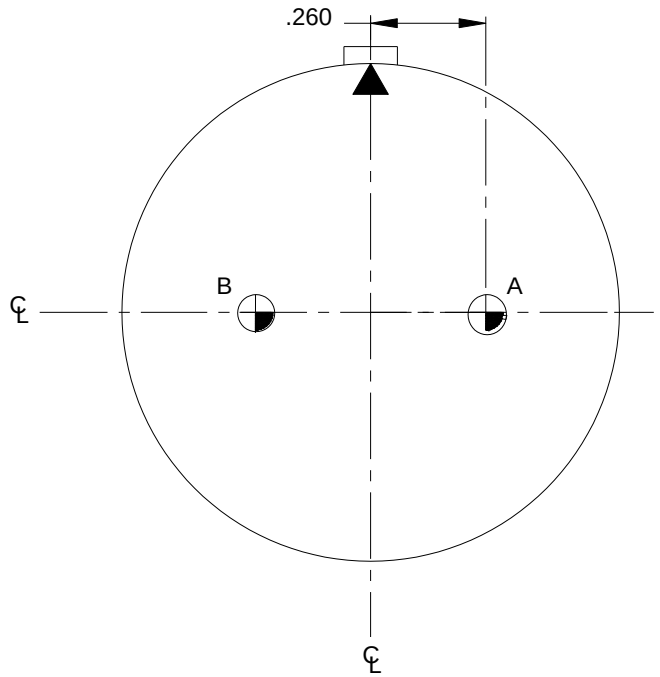

24-9

(Inactive for New Design after 13 May 1954 for SAE-AS50151 and MIL-DTL-83723 series II. Active for new design for SAE-AS95234.)

(Not applicable to MIL-DTL-22992.)

Contacts (Insert arrangement 24-9)		
Contact position identification (ID)	Contact location	
	X-axis (mm)	Y-axis (mm)
A	+.260 (6.60)	+.000 (0.00)
B	-.260 (6.60)	+.000 (0.00)

Shell size	Arrangement number	Number of contacts	Size contacts	Service rating	Contact location	Supersedes
24	-9	2	4	A	All	MS33687-9

Alternate insert positions			
A degrees (A°)			
W	X	Y	Z
35	110	250	325

FIGURE 9. Insert arrangement, electrical connector, shell size 24, MIL-DTL-22992, classes C, J and R, MIL-DTL-83723, series II, SAE-AS50151 and SAE-AS95234 – Continued.

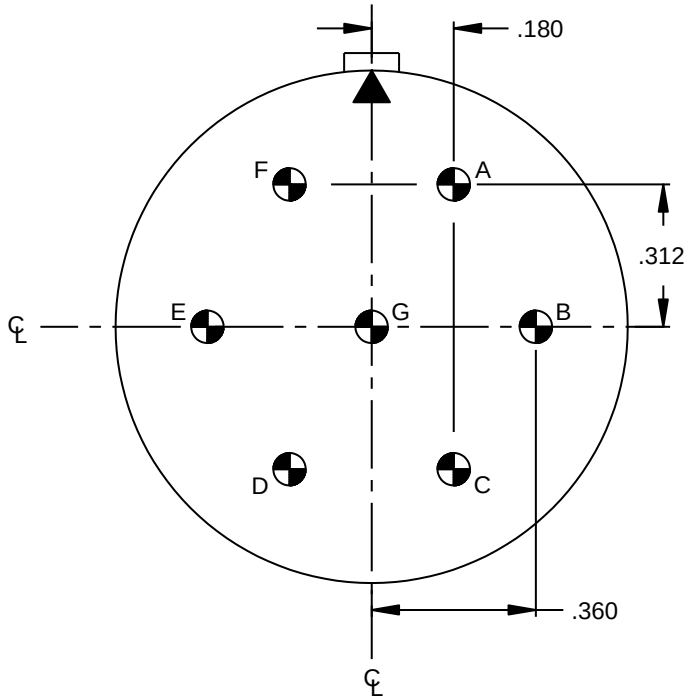

24-10

Contacts (Insert arrangement 24-10)		
Contact position identification (ID)	Contact location	
	X-axis (mm)	Y-axis (mm)
A	+.180 (4.57)	+.312 (7.92)
B	+.360 (9.14)	+.000 (0.00)
C	+.180 (4.57)	-.312 (7.92)
D	-.180 (4.57)	-.312 (7.92)
E	-.360 (9.14)	+.000 (0.00)
F	-.180 (4.57)	+.312 (7.92)
G	+.000 (0.00)	+.000 (0.00)

Shell size	Arrangement number	Number of contacts	Size contacts	Service rating	Contact location	Supersedes
24	-10	7	8	A	All	MS33687-10

Alternate insert positions			
A degrees (A°)			
W	X	Y	Z
80	---	---	280

FIGURE 9. Insert arrangement, electrical connector, shell size 24, MIL-DTL-22992, classes C, J and R, MIL-DTL-83723, series II, SAE-AS50151 and SAE-AS95234 – Continued.

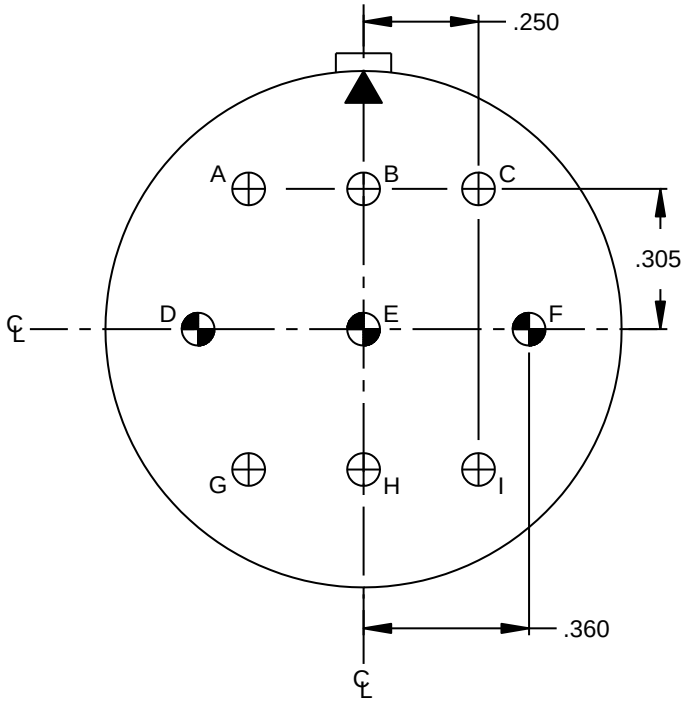

24-11

Contacts (Insert arrangement 24-11)		
Contact position identification (ID)	Contact location	
	X-axis (mm)	Y-axis (mm)
A	-.250 (6.35)	+.305 (7.75)
B	+.000 (0.00)	+.305 (7.75)
C	+.250 (6.35)	+.305 (7.75)
D	-.360 (9.14)	+.000 (0.00)
E	+.000 (0.00)	+.000 (0.00)
F	+.360 (9.14)	+.000 (0.00)
G	-.250 (6.35)	-.305 (7.75)
H	+.000 (0.00)	-.305 (7.75)
I	+.250 (6.35)	-.305 (7.75)

Shell size	Arrangement number	Number of contacts	Size contacts	Service rating	Contact location	Supersedes
24	-11	6	12	A	All others	MS33687-11
		3	8		D,E,F	

Alternate insert positions			
A degrees (A°)			
W	X	Y	Z
35	110	250	325

FIGURE 9. Insert arrangement, electrical connector, shell size 24, MIL-DTL-22992, classes C, J and R, MIL-DTL-83723, series II, SAE-AS50151 and SAE-AS95234 – Continued.

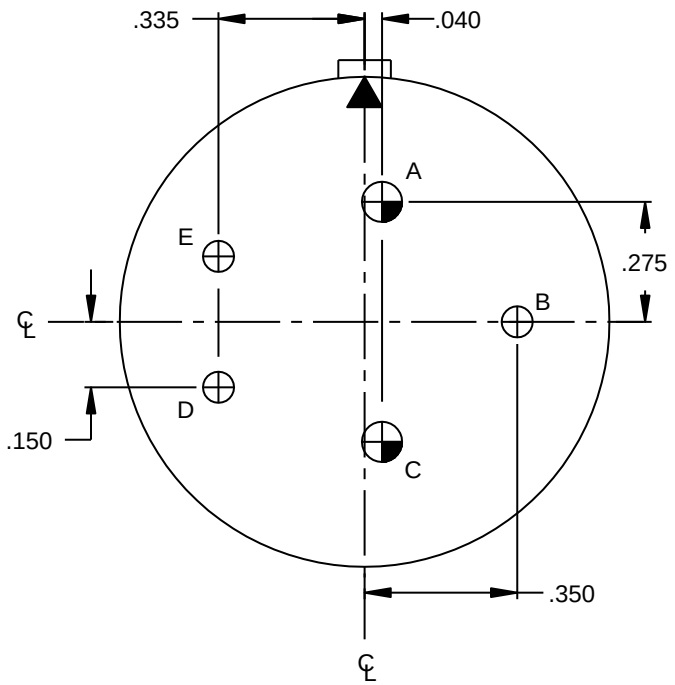

24-12

Contacts (Insert arrangement 24-12)		
Contact position identification (ID)	Contact location	
	X-axis (mm)	Y-axis (mm)
A	+.040 (1.02)	+.275 (6.99)
B	+.350 (8.89)	+.000 (0.00)
C	+.040 (1.02)	-.275 (6.99)
D	-.335 (8.51)	-.150 (3.81)
E	-.335 (8.51)	+.150 (3.81)

Shell size	Arrangement number	Number of contacts	Size contacts	Service rating	Contact location	Supersedes
24	-12	3	12	A	All others	MS33687-12
		2	4		A,C	

Alternate insert positions			
A degrees (A°)			
W	X	Y	Z
80	110	250	280

FIGURE 9. Insert arrangement, electrical connector, shell size 24, MIL-DTL-22992, classes C, J and R, MIL-DTL-83723, series II, SAE-AS50151 and SAE-AS95234 – Continued.

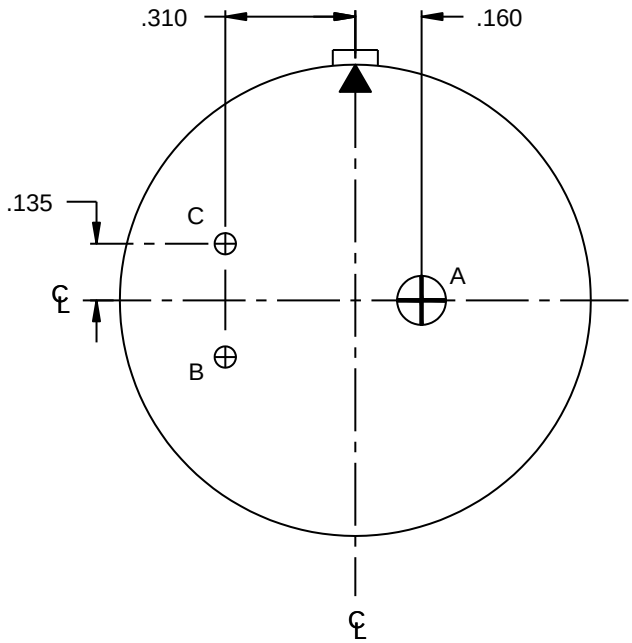

24-14

(Inactive for New Design after 17 Dec 1958 for SAE-AS50151 and MIL-DTL-83723 series II. Active for new design for SAE-AS95234.)

(Not applicable to MIL-DTL-22992.)

Contacts (Insert arrangement 24-14)		
Contact position identification (ID)	Contact location	
	X-axis (mm)	Y-axis (mm)
A	+.160 (4.06)	+.000 (0.00)
B	-.310 (7.87)	-.135 (3.43)
C	-.310 (7.87)	+.135 (3.43)

Shell size	Arrangement number	Number of contacts	Size contacts	Service rating	Contact location	Supersedes
24	-14	2	12	A	B,C	MS33687-14
		1	0		A	

Alternate insert positions			
A degrees (A°)			
W	X	Y	Z
80	110	250	280

FIGURE 9. Insert arrangement, electrical connector, shell size 24, MIL-DTL-22992, classes C, J and R, MIL-DTL-83723, series II, SAE-AS50151 and SAE-AS95234 – Continued.

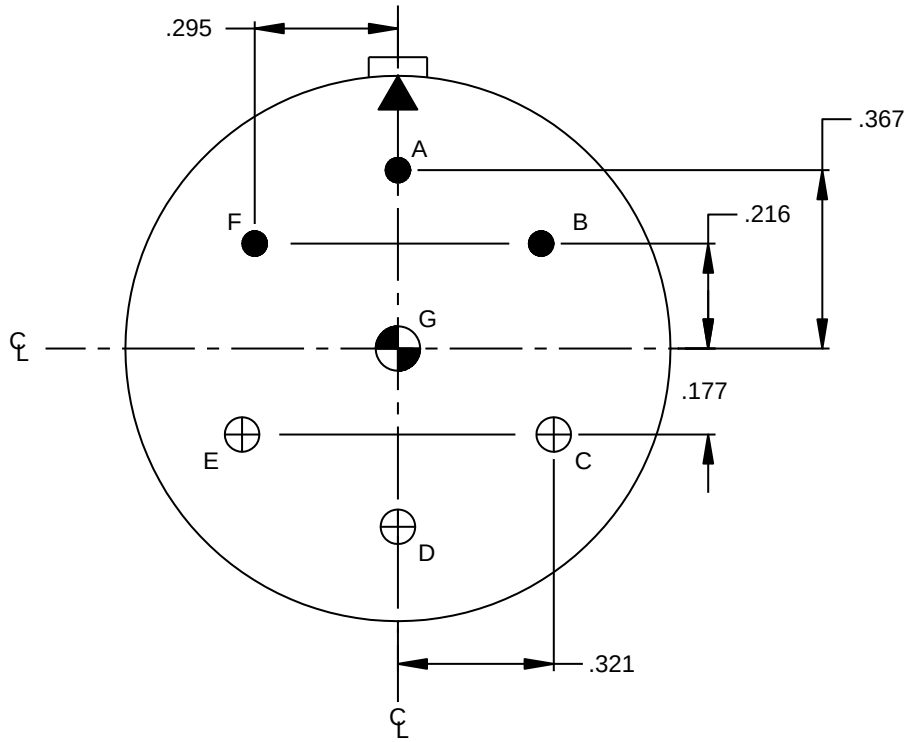

24-16

Contacts (Insert arrangement 24-16)		
Contact position identification (ID)	Contact location	
	X-axis (mm)	Y-axis (mm)
A	+.000 (0.00)	+.367 (9.32)
B	+.295 (7.49)	+.216 (5.49)
C	+.321 (8.15)	-.177 (4.50)
D	+.000 (0.00)	-.367 (9.32)
E	-.321 (8.15)	-.177 (4.50)
F	-.295 (7.49)	+.216 (5.49)
G	+.000 (0.00)	+.000 (0.00)

Shell size	Arrangement number	Number of contacts	Size contacts	Service rating	Contact location	Supersedes
24	-16	3	16	D	A,B,F	MS33687-16
		1	8	D	G	
		3	12	A	C,D,E	

Alternate insert positions			
A degrees (A°)			
W	X	Y	Z
80	110	250	280

FIGURE 9. Insert arrangement, electrical connector, shell size 24, MIL-DTL-22992, classes C, J and R, MIL-DTL-83723, series II, SAE-AS50151 and SAE-AS95234 – Continued.

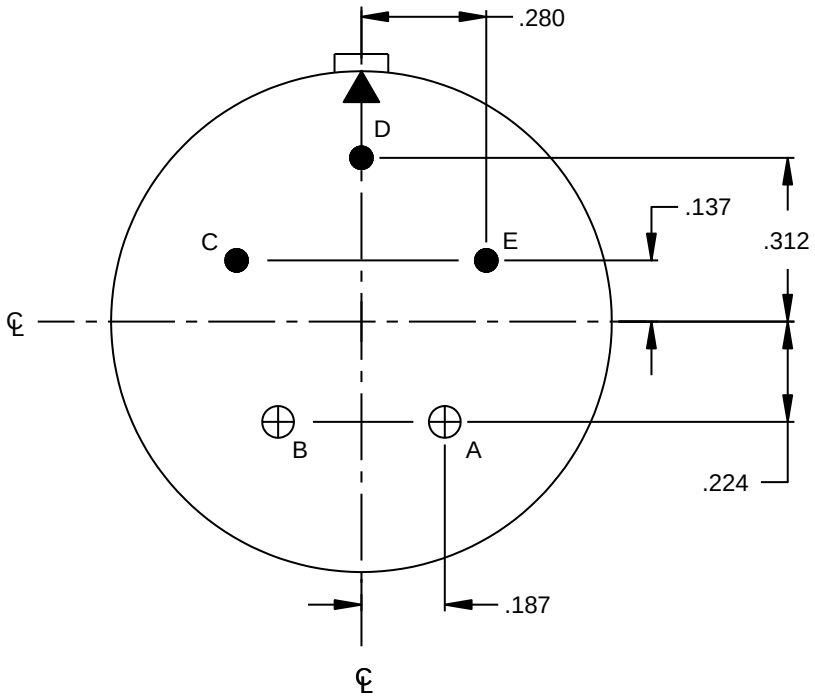

24-17

(Inactive for New Design after 13 May 1954 for SAE-AS50151 and MIL-DTL-83723 series II. Active for new design for SAE-AS95234.)

(Not applicable to MIL-DTL-22992.)

Contacts (Insert arrangement 24-17)		
Contact position identification (ID)	Contact location	
	X-axis (mm)	Y-axis (mm)
A	+.187 (4.75)	-.224 (5.69)
B	-.187 (4.75)	-.224 (5.69)
C	-.280 (7.11)	+.137 (3.48)
D	+.000 (0.00)	+.312 (7.92)
E	+.280 (7.11)	+.137 (3.48)

Shell size	Arrangement number	Number of contacts	Size contacts	Service rating	Contact location	Supersedes
24	-17	3	16	D	C,D,E	MS33687-17
		2	12		A,B	

Alternate insert positions			
A degrees (A°)			
W	X	Y	Z
80	110	250	280

FIGURE 9. Insert arrangement, electrical connector, shell size 24, MIL-DTL-22992, classes C, J and R, MIL-DTL-83723, series II, SAE-AS50151 and SAE-AS95234 – Continued.

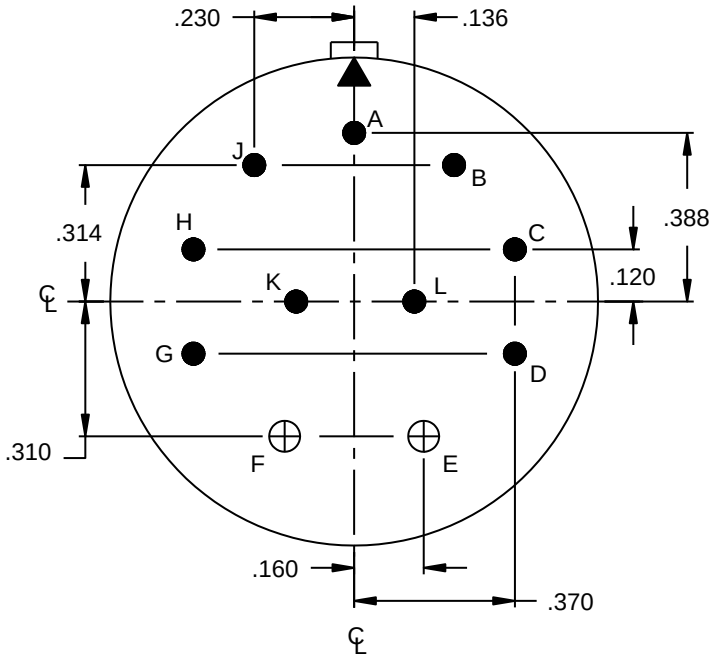

24-20

Contacts (Insert arrangement 24-20)		
Contact position identification (ID)	Contact location	
	X-axis (mm)	Y-axis (mm)
A	+.000 (0.00)	+.388 (9.86)
B	+.230 (5.84)	+.314 (7.98)
C	+.370 (9.40)	+.120 (3.05)
D	+.370 (9.40)	-.120 (3.05)
E	+.160 (4.06)	-.310 (7.87)
F	-.160 (4.06)	-.310 (7.87)
G	-.370 (9.40)	-.120 (3.05)
H	-.370 (9.40)	+.120 (3.05)
J	-.230 (5.84)	+.314 (7.98)
K	-.136 (3.45)	+.000 (0.00)
L	+.136 (3.45)	+.000 (0.00)

Shell size	Arrangement number	Number of contacts	Size contacts	Service rating	Contact location	Supersedes
24	-20	9	16	D	All others	MS33687-20
		2	12		F,E	

Alternate insert positions			
A degrees (A°)			
W	X	Y	Z
80	110	250	280

FIGURE 9. Insert arrangement, electrical connector, shell size 24, MIL-DTL-22992, classes C, J and R, MIL-DTL-83723, series II, SAE-AS50151 and SAE-AS95234 – Continued.

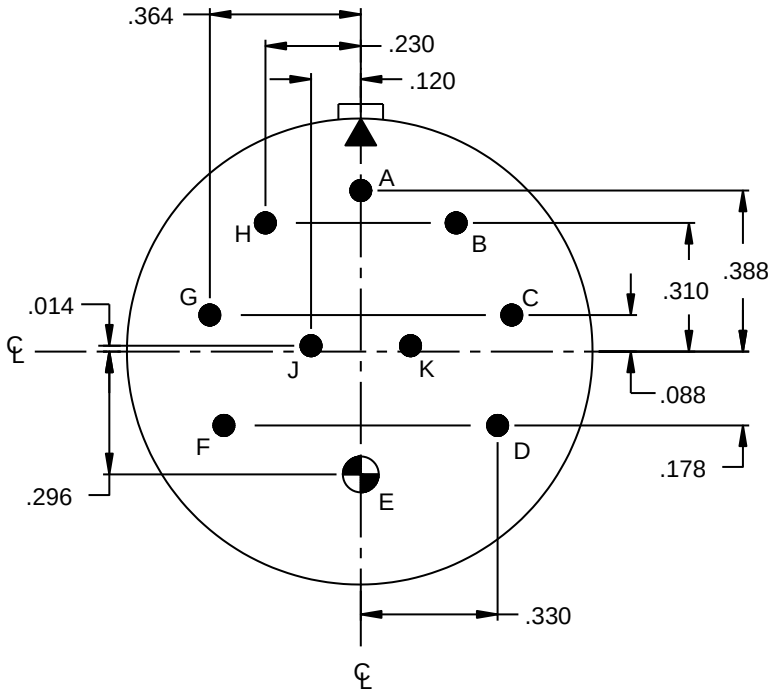

24-21

Contacts (Insert arrangement 24-21)		
Contact position identification (ID)	Contact location	
	X-axis (mm)	Y-axis (mm)
A	+.000 (0.00)	+.388 (9.86)
B	+.230 (5.84)	+.310 (7.87)
C	+.364 (9.25)	+.088 (2.24)
D	+.330 (8.38)	-.178 (4.52)
E	+.000 (0.00)	-.296 (7.52)
F	-.330 (8.38)	-.178 (4.52)
G	-.364 (9.25)	+.088 (2.24)
H	-.230 (5.84)	+.310 (7.87)
J	-.120 (3.05)	+.014 (0.36)
K	+.120 (3.05)	+.014 (0.36)

Shell size	Arrangement number	Number of contacts	Size contacts	Service rating	Contact location	Supersedes
24	-21	9	16	D	All others	MS33687-21
		1	8		E	

Alternate insert positions			
A degrees (A°)			
W	X	Y	Z
80	110	250	280

FIGURE 9. Insert arrangement, electrical connector, shell size 24, MIL-DTL-22992, classes C, J and R, MIL-DTL-83723, series II, SAE-AS50151 and SAE-AS95234 – Continued.

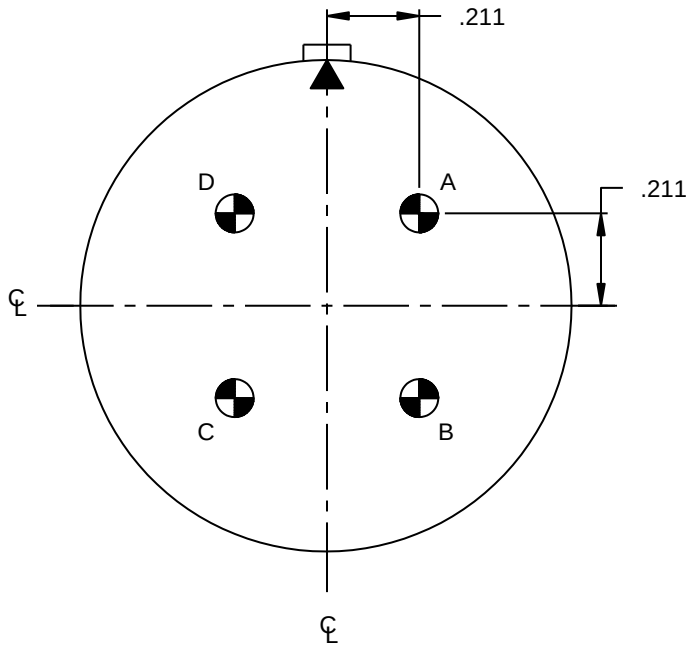

24-22

Contacts (Insert arrangement 24-22)		
Contact position identification (ID)	Contact location	
	X-axis (mm)	Y-axis (mm)
A	+.211 (5.33)	+.211 (5.33)
B	+.211 (5.33)	-.211 (5.33)
C	-.211 (5.33)	-.211 (5.33)
D	-.211 (5.33)	+.211 (5.33)

Shell size	Arrangement number	Number of contacts	Size contacts	Service rating	Contact location	Supersedes
24	-22	4	8	A	All	MS33687-22

Alternate insert positions			
A degrees (A°)			
W	X	Y	Z
45	110	250	---

FIGURE 9. Insert arrangement, electrical connector, shell size 24, MIL-DTL-22992, classes C, J and R, MIL-DTL-83723, series II, SAE-AS50151 and SAE-AS95234 – Continued.

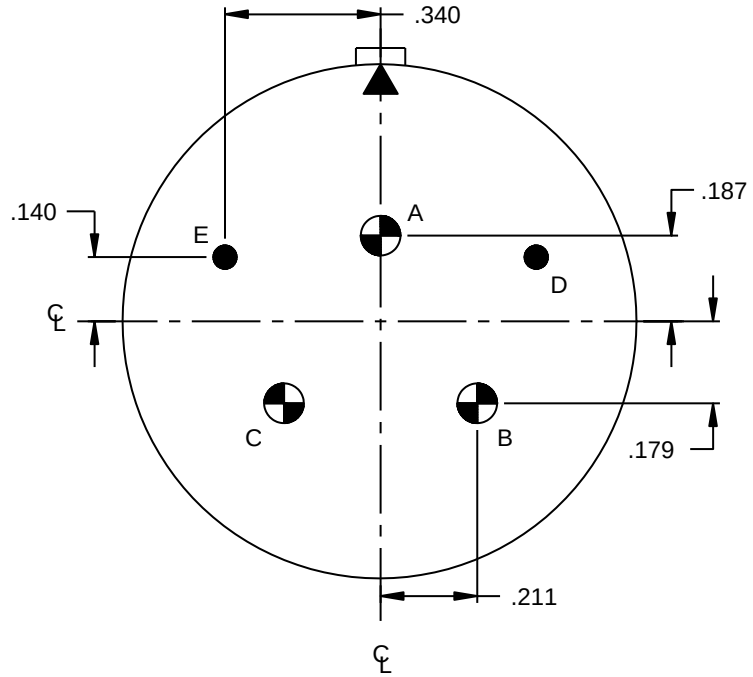

24-23

(Inactive for New Design after 11 Dec 1958 for SAE-AS50151 and MIL-DTL-83723 series II. Active for new design for SAE-AS95234.)

(Not applicable to MIL-DTL-22992.)

Contacts (Insert arrangement 24-23)		
Contact position identification (ID)	Contact location	
	X-axis (mm)	Y-axis (mm)
A	+.000 (0.00)	+.187 (4.75)
B	+.211 (5.36)	-.179 (4.55)
C	-.211 (5.36)	-.179 (4.55)
D	+.340 (8.64)	+.140 (3.56)
E	-.340 (8.64)	+.140 (3.56)

Shell size	Arrangement number	Number of contacts	Size contacts	Service rating	Contact location	Supersedes
24	-23	2	16	D	D,E	MS33687-23
		3	8		A,B,C	

Alternate insert positions			
A degrees (A°)			
W	X	Y	Z
80	110	250	280

FIGURE 9. Insert arrangement, electrical connector, shell size 24, MIL-DTL-22992, classes C, J and R, MIL-DTL-83723, series II, SAE-AS50151 and SAE-AS95234 – Continued.

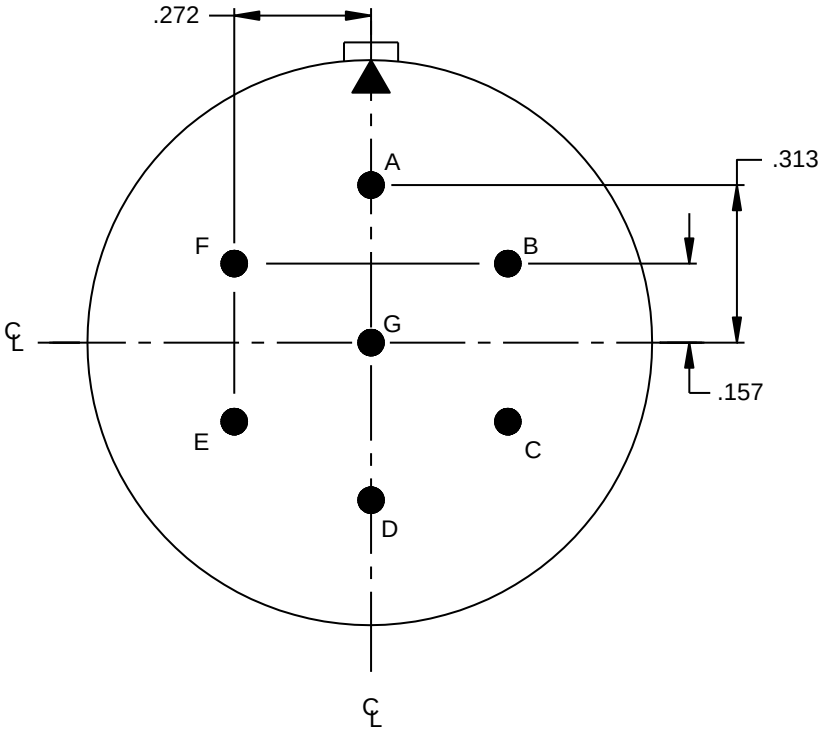

24-27

Contacts (Insert arrangement 24-27)		
Contact position identification (ID)	Contact location	
	X-axis (mm)	Y-axis (mm)
A	+.000 (0.00)	+.313 (7.95)
B	+.272 (6.91)	+.157 (3.99)
C	+.272 (6.91)	-.157 (3.99)
D	+.000 (0.00)	-.313 (7.95)
E	-.272 (6.91)	-.157 (3.99)
F	-.272 (6.91)	+.157 (3.99)
G	+.000 (0.00)	+.000 (0.00)

Shell size	Arrangement number	Number of contacts	Size contacts	Service rating	Contact location	Supersedes
24	-27	7	16	E	All	MS33687-27

Alternate insert positions			
A degrees (A°)			
W	X	Y	Z
80	---	---	280

FIGURE 9. Insert arrangement, electrical connector, shell size 24, MIL-DTL-22992, classes C, J and R, MIL-DTL-83723, series II, SAE-AS50151 and SAE-AS95234 – Continued.

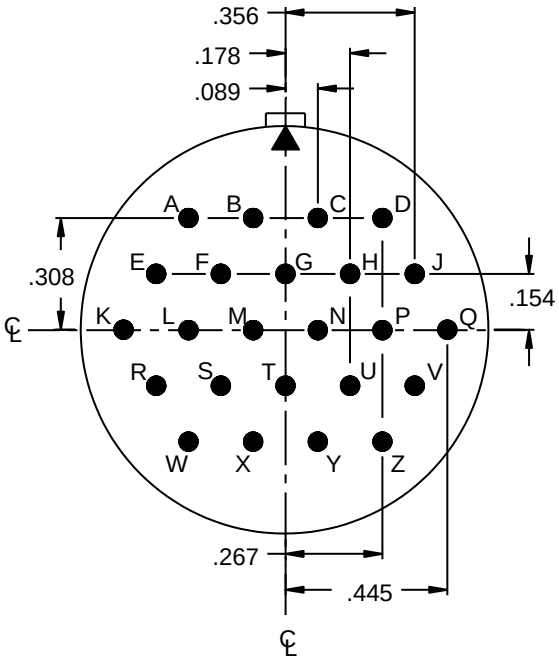

24-28

Contacts (Insert arrangement 24-28)		
Contact position ID	Contact location	
	X-axis (mm)	Y-axis (mm)
A	-.267 (6.78)	+.308 (7.82)
B	-.089 (2.26)	+.308 (7.82)
C	+.089 (2.26)	+.308 (7.82)
D	+.267 (6.78)	+.308 (7.82)
E	-.356 (9.04)	+.154 (3.91)
F	-.178 (4.52)	+.154 (3.91)
G	+.000 (0.00)	+.154 (3.91)
H	+.178 (4.52)	+.154 (3.91)
J	+.356 (9.04)	+.154 (3.91)
K	-.445 (11.30)	+.000 (0.00)
L	-.267 (6.78)	+.000 (0.00)
M	-.089 (2.26)	+.000 (0.00)

Contacts (Insert arrangement 24-28)		
Contact position ID	Contact location	
	X-axis (mm)	Y-axis (mm)
N	+.089 (2.26)	+.000 (0.00)
P	+.267 (6.78)	+.000 (0.00)
Q	+.445 (11.30)	+.000 (0.00)
R	-.356 (9.04)	-.154 (3.91)
S	-.178 (4.52)	-.154 (3.91)
T	+.000 (0.00)	-.154 (3.91)
U	+.178 (4.52)	-.154 (3.91)
V	+.356 (9.04)	-.154 (3.91)
W	-.267 (6.78)	-.308 (7.82)
X	-.089 (2.26)	-.308 (7.82)
Y	+.089 (2.26)	-.308 (7.82)
Z	+.267 (6.78)	-.308 (7.82)

Shell size	Arrangement number	Number of contacts	Size contacts	Service rating	Contact location	Supersedes
24	-28	24	16	INST	All	MS33687-28

Alternate insert positions			
A degrees (A°)			
W	X	Y	Z
80	110	250	280

FIGURE 9. Insert arrangement, electrical connector, shell size 24, MIL-DTL-22992, classes C, J and R, MIL-DTL-83723, series II, SAE-AS50151 and SAE-AS95234 – Continued.

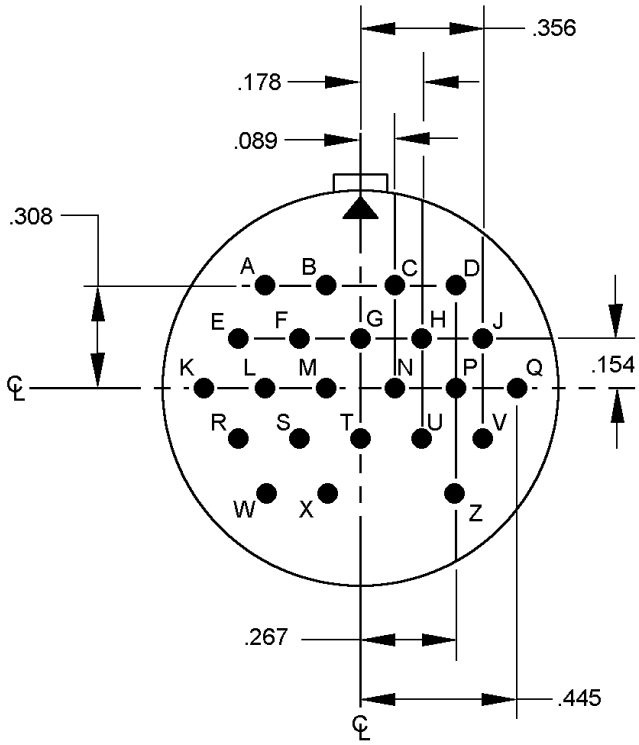

(Inactive for New Design of Air Force airborne equipment for SAE-AS50151 and MIL-DTL-83723 series II. Active for new design for SAE-AS95234.)

Contacts (Insert arrangement 24-80)		
Contact position ID	Contact location	
	X-axis (mm)	Y-axis (mm)
A	-.267 (6.78)	+.308 (7.82)
B	-.089 (2.26)	+.308 (7.82)
C	+.089 (2.26)	+.308 (7.82)
D	+.267 (6.78)	+.308 (7.82)
E	-.356 (9.04)	+.154 (3.91)
F	-.178 (4.52)	+.154 (3.91)
G	+.000 (0.00)	+.154 (3.91)
H	+.178 (4.52)	+.154 (3.91)
J	+.356 (9.04)	+.154 (3.91)
K	-.445 (11.30)	+.000 (0.00)
L	-.267 (6.78)	+.000 (0.00)
M	-.089 (2.26)	+.000 (0.00)

Contacts (Insert arrangement 24-80)		
Contact position ID	Contact location	
	X-axis (mm)	Y-axis (mm)
N	+.089 (2.26)	+.000 (0.00)
P	+.267 (6.78)	+.000 (0.00)
Q	+.445 (11.30)	+.000 (0.00)
R	-.356 (9.04)	-.154 (3.91)
S	-.178 (4.52)	-.154 (3.91)
T	+.000 (0.00)	-.154 (3.91)
U	+.178 (4.52)	-.154 (3.91)
V	+.356 (9.04)	-.154 (3.91)
W	-.267 (6.78)	-.308 (7.82)
X	-.089 (2.26)	-.308 (7.82)
Z	+.267 (6.78)	-.308 (7.82)
---	---	---

Shell size	Arrangement number	Number of contacts	Size contacts	Service rating	Contact location	Supersedes
24	-80	23	16	INST	All	MS33687-80

FIGURE 9. Insert arrangement, electrical connector, shell size 24, MIL-DTL-22992, classes C, J and R, MIL-DTL-83723, series II, SAE-AS50151 and SAE-AS95234 – Continued.

Insert arrangement 24-80			
Alternate insert positions			
A degrees (A°)			
W	X	Y	Z
35	145	240	300

FIGURE 9. Insert arrangement, electrical connector, shell size 24, MIL-DTL-22992, classes C, J and R, MIL-DTL-83723, series II, SAE-AS50151 and SAE-AS95234 – Continued.

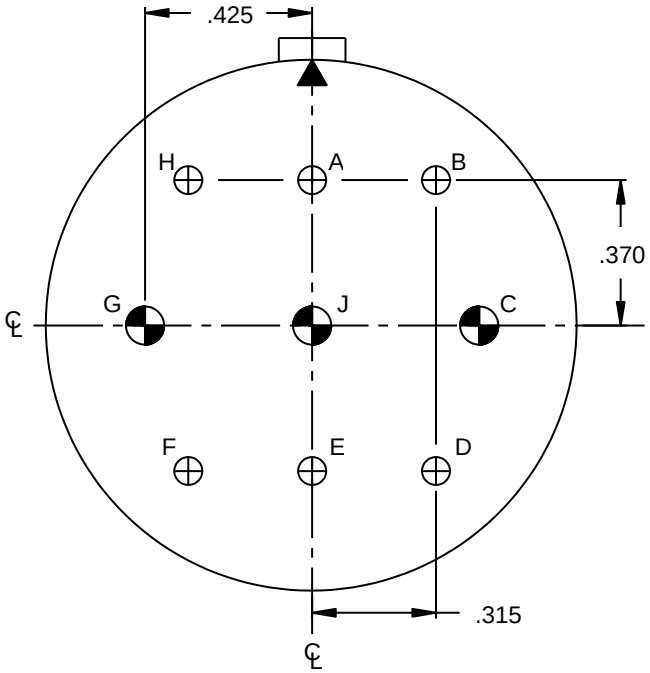

28-1

Contacts (Insert arrangement 28-1)		
Contact position identification (ID)	Contact location	
	X-axis (mm)	Y-axis (mm)
A	+.000 (0.00)	+.370 (9.40)
B	+.315 (8.00)	+.370 (9.40)
C	+.425 (10.80)	+.000 (0.00)
D	+.315 (8.00)	-.370 (9.40)
E	+.000 (0.00)	-.370 (9.40)
F	-.315 (8.00)	-.370 (9.40)
G	-.425 (10.80)	+.000 (0.00)
H	-.315 (8.00)	+.370 (9.40)
J	+.000 (0.00)	+.000 (0.00)

Shell size	Arrangement number	Number of contacts	Size contacts	Service rating	Contact location	Supersedes
28	-1	2	12	D	A,E	MS33688-1
		4	12	A	B,D,F,H	
		1	8	D	J	
		2	8	A	G,C	

Alternate insert positions			
A degrees (A°)			
W	X	Y	Z
80	110	250	280

FIGURE 10. Insert arrangement, electrical connector, shell size 28, MIL-DTL-22992, classes C, J and R, MIL-DTL-83723, series II, SAE-AS50151 and SAE-AS95234.

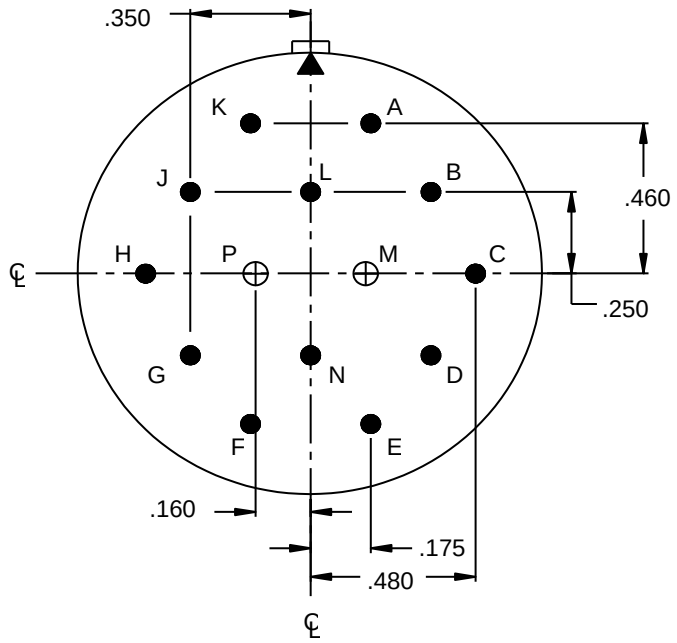

28-2

Contacts (Insert arrangement 28-2)		
Contact position	Contact location	
	X-axis (mm)	Y-axis (mm)
A	+.175 (4.45)	+.460 (11.68)
B	+.350 (8.89)	+.250 (6.35)
C	+.480 (12.19)	+.000 (0.00)
D	+.350 (8.89)	-.250 (6.35)
E	+.175 (4.45)	-.460 (11.68)
F	-.175 (4.45)	-.460 (11.68)
G	-.350 (8.89)	-.250 (6.35)

Contacts (Insert arrangement 28-2)		
Contact position	Contact location	
	X-axis (mm)	Y-axis (mm)
H	-.480 (12.19)	+.000 (0.00)
J	-.350 (8.89)	+.250 (6.35)
K	-.175 (4.45)	+.460 (11.68)
L	+.000 (0.00)	+.250 (6.35)
M	+.160 (4.06)	+.000 (0.00)
N	+.000 (0.00)	-.250 (6.35)
P	-.160 (4.06)	+.000 (0.00)

Shell size	Arrangement number	Number of contacts	Size contacts	Service rating	Contact location	Supersedes
28	-2	12	16	D	All others	MS33688-2
		2	12		M,P	

Alternate insert positions			
A degrees (A°)			
W	X	Y	Z
35	110	250	325

FIGURE 10. Insert arrangement, electrical connector, shell size 28, MIL-DTL-22992, classes C, J and R, MIL-DTL-83723, series II, SAE-AS50151 and SAE-AS95234 – Continued.

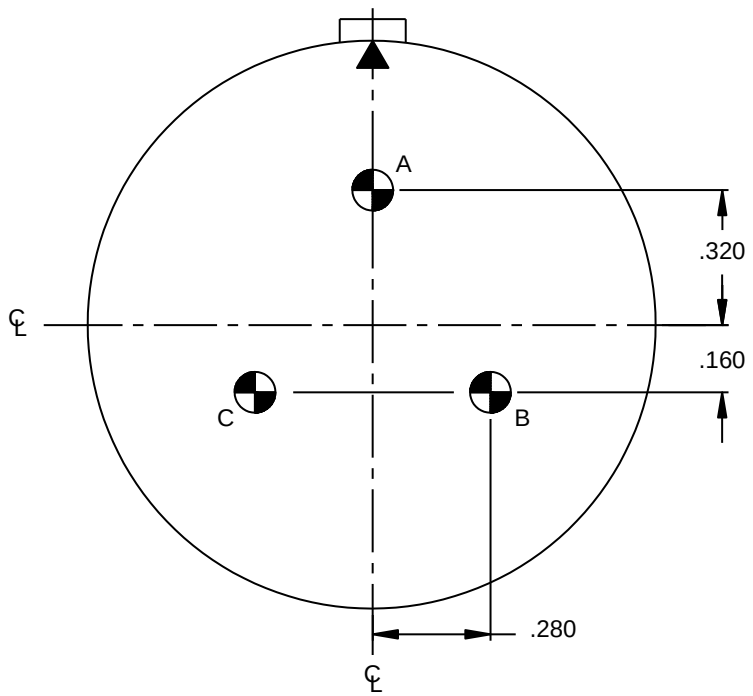

28-3

Contacts (Insert arrangement 28-3)		
Contact position identification (ID)	Contact location	
	X-axis (mm)	Y-axis (mm)
A	+.000 (0.00)	+.320 (8.13)
B	+.280 (7.11)	-.160 (4.06)
C	-.280 (7.11)	-.160 (4.06)

Shell size	Arrangement number	Number of contacts	Size contacts	Service rating	Contact location	Supersedes
28	-3	3	8	E	All	MS33688-3

Alternate insert positions			
A degrees (A°)			
W	X	Y	Z
70	145	215	290

FIGURE 10. Insert arrangement, electrical connector, shell size 28, MIL-DTL-22992, classes C, J and R, MIL-DTL-83723, series II, SAE-AS50151 and SAE-AS95234 – Continued.

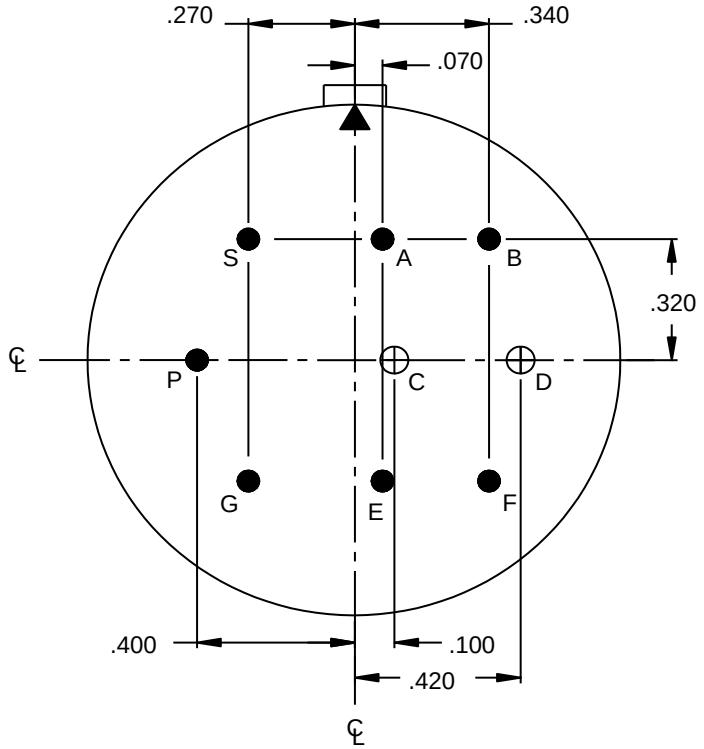

28-4

Contacts (Insert arrangement 28-4)		
Contact position identification (ID)	Contact location	
	X-axis (mm)	Y-axis (mm)
A	+.070 (1.78)	+.320 (8.13)
B	+.340 (8.64)	+.320 (8.13)
C	+.100 (2.54)	+.000 (0.00)
D	+.420 (10.67)	+.000 (0.00)
E	+.070 (1.78)	-.320 (8.13)
F	+.340 (8.64)	-.320 (8.13)
G	-.270 (6.86)	-.320 (8.13)
P	-.400 (10.16)	+.000 (0.00)
S	-.270 (6.86)	+.320 (8.13)

Shell size	Arrangement number	Number of contacts	Size contacts	Service rating	Contact location	Supersedes
28	-4	3	16	E	G,P,S	MS33688-4
		4	16	D	A,B,E,F	
		2	12	D	C,D	

Alternate insert positions			
A degrees (A°)			
W	X	Y	Z
80	110	250	280

FIGURE 10. Insert arrangement, electrical connector, shell size 28, MIL-DTL-22992, classes C, J and R, MIL-DTL-83723, series II, SAE-AS50151 and SAE-AS95234 – Continued.

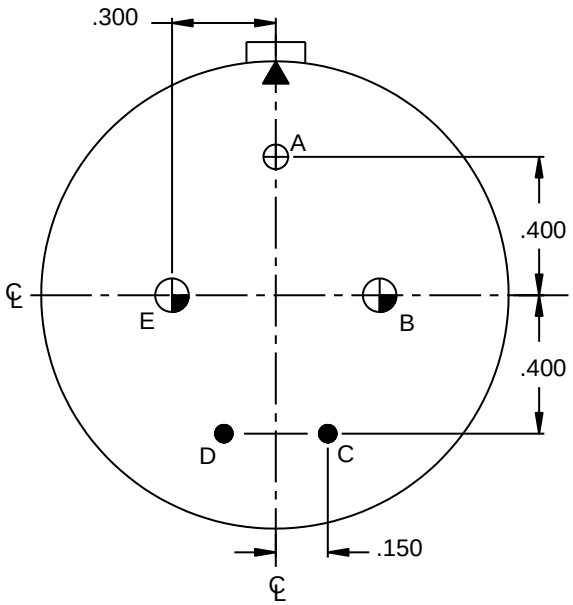

28-5

Contacts (Insert arrangement 28-5)		
Contact position identification (ID)	Contact location	
	X-axis (mm)	Y-axis (mm)
A	+.000 (0.00)	+.400 (10.16)
B	+.300 (7.62)	+.000 (0.00)
C	+.150 (3.81)	-.400 (10.16)
D	-.150 (3.81)	-.400 (10.16)
E	-.300 (7.62)	+.000 (0.00)

Shell size	Arrangement number	Number of contacts	Size contacts	Service rating	Contact location	Supersedes
28	-5	2	16	D	C,D	MS33688-5
		1	12	D	A	
		2	4	D	B,E	

Alternate insert positions			
A degrees (A°)			
W	X	Y	Z
35	110	250	325

FIGURE 10. Insert arrangement, electrical connector, shell size 28, MIL-DTL-22992, classes C, J and R, MIL-DTL-83723, series II, SAE-AS50151 and SAE-AS95234 – Continued.

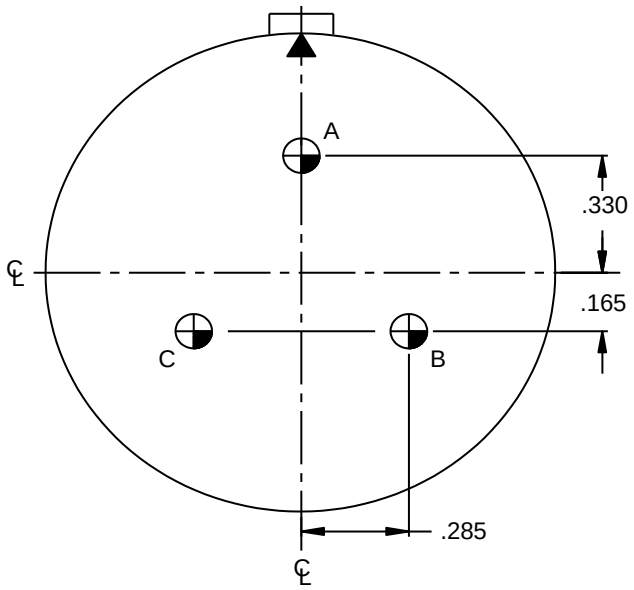

28-6

(Inactive for New Design after 13 May 1954 for SAE-AS50151 and MIL-DTL-83723 series II. Active for new design for SAE-AS95234.)

(Not applicable to MIL-DTL-22992.)

Contacts (Insert arrangement 28-6)		
Contact position identification (ID)	Contact location	
	X-axis (mm)	Y-axis (mm)
A	+.000 (0.00)	+.330 (8.38)
B	+.285 (7.24)	-.165 (4.19)
C	-.285 (7.24)	-.165 (4.19)

Shell size	Arrangement number	Number of contacts	Size contacts	Service rating	Contact location	Supersedes
28	-6	3	4	D	All	MS33688-6

Alternate insert positions			
A degrees (A°)			
W	X	Y	Z
70	145	215	290

FIGURE 10. Insert arrangement, electrical connector, shell size 28, MIL-DTL-22992, classes C, J and R, MIL-DTL-83723, series II, SAE-AS50151 and SAE-AS95234 – Continued.

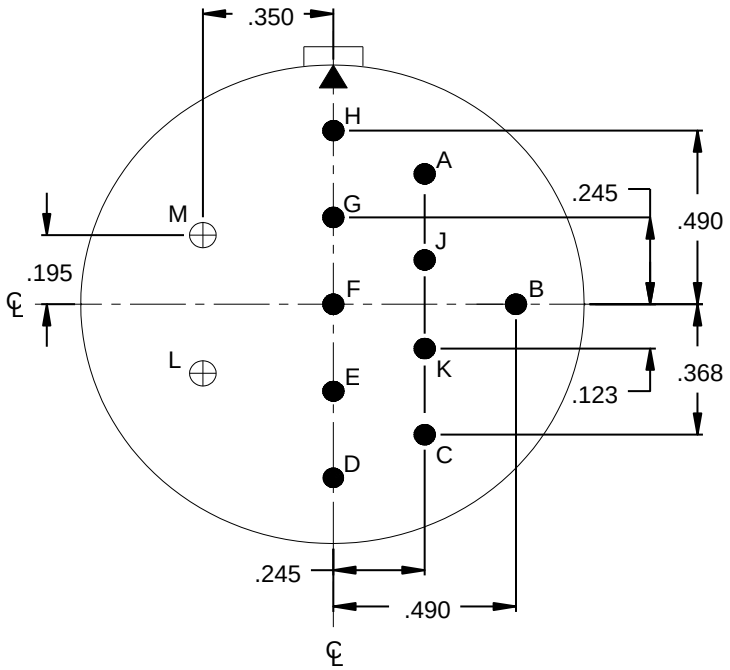

28-8

Contacts (Insert arrangement 28-8)		
Contact position identification (ID)	Contact location	
	X-axis (mm)	Y-axis (mm)
A	+.245 (6.22)	+.368 (9.35)
B	+.490 (12.45)	+.000 (0.00)
C	+.245 (6.22)	-.368 (9.35)
D	+.000 (0.00)	-.490 (12.45)
E	+.000 (0.00)	-.245 (6.22)
F	+.000 (0.00)	+.000 (0.00)
G	+.000 (0.00)	+.245 (6.22)
H	+.000 (0.00)	+.490 (12.45)
J	+.245 (6.22)	+.123 (3.12)
K	+.245 (6.22)	-.123 (3.12)
L	-.350 (8.89)	-.195 (4.95)
M	-.350 (8.89)	+.195 (4.95)

Shell size	Arrangement number	Number of contacts	Size contacts	Service rating	Contact location	Supersedes
28	-8	2	12	E	L,M	MS33688-8
		1	16	D	B	
		9	16	A	All others	

Alternate insert positions			
A degrees (A°)			
W	X	Y	Z
80	110	250	280

FIGURE 10. Insert arrangement, electrical connector, shell size 28, MIL-DTL-22992, classes C, J and R, MIL-DTL-83723, series II, SAE-AS50151 and SAE-AS95234 – Continued.

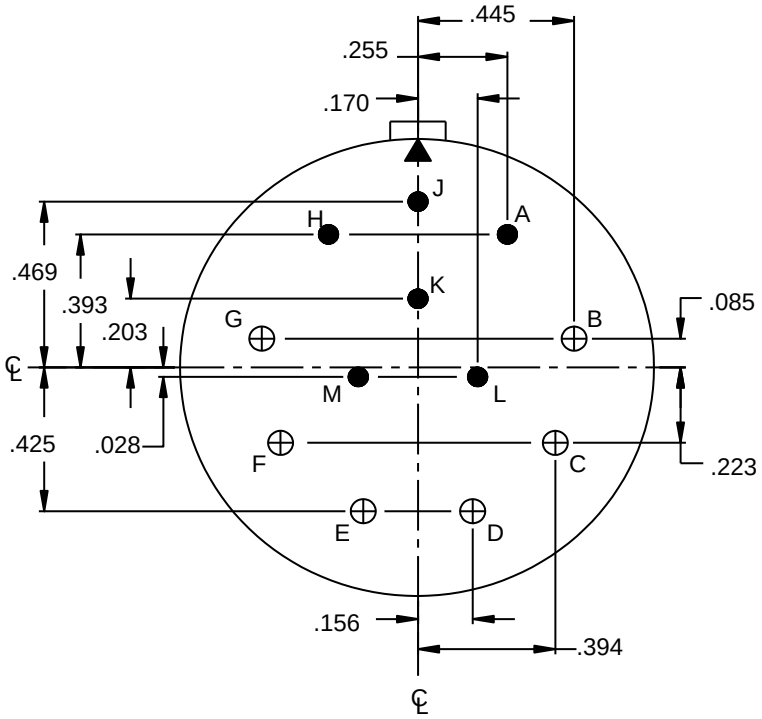

28-9

Contacts (Insert arrangement 28-9)		
Contact position identification (ID)	Contact location	
	X-axis (mm)	Y-axis (mm)
A	+.225 (6.48)	+.393 (9.98)
B	+.445 (11.30)	+.085 (2.16)
C	+.394 (10.01)	-.223 (5.66)
D	+.156 (3.96)	-.425 (10.80)
E	-.156 (3.96)	-.425 (10.80)
F	-.394 (10.01)	-.223 (5.66)
G	-.445 (11.30)	+.085 (2.16)
H	-.225 (6.48)	+.393 (9.98)
J	+.000 (0.00)	+.469 (11.91)
K	+.000 (0.00)	+.203 (5.16)
L	+.170 (4.32)	-.028 (0.71)
M	-.170 (4.32)	-.028 (0.71)

Shell size	Arrangement number	Number of contacts	Size contacts	Service rating	Contact location	Supersedes
28	-9	6	16	D	A,H,J,K,L,M	MS33688-9
		6	12		B,C,D,E,F,G	

Alternate insert positions			
A degrees (A°)			
W	X	Y	Z
80	110	250	280

FIGURE 10. Insert arrangement, electrical connector, shell size 28, MIL-DTL-22992, classes C, J and R, MIL-DTL-83723, series II, SAE-AS50151 and SAE-AS95234 – Continued.

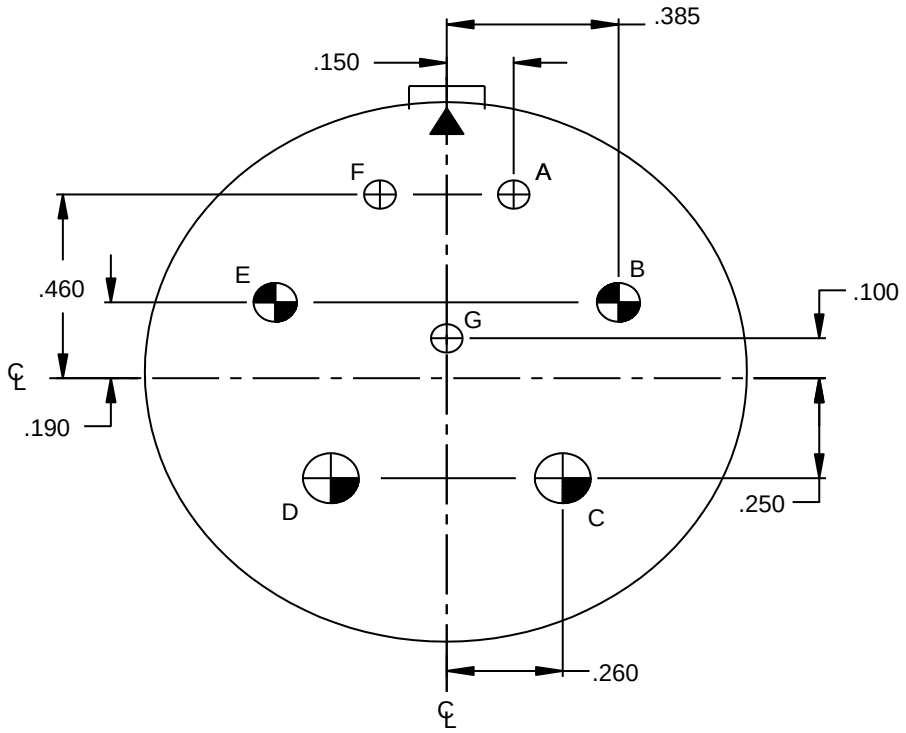

28-10

Contacts (Insert arrangement 28-10)		
Contact position identification (ID)	Contact location	
	X-axis (mm)	Y-axis (mm)
A	+.150 (3.81)	+.460 (11.68)
B	+.385 (9.78)	+.190 (4.83)
C	+.260 (6.60)	-.250 (6.35)
D	-.260 (6.60)	-.250 (6.35)
E	-.385 (9.78)	+.190 (4.83)
F	-.150 (3.81)	+.460 (11.46)
G	+.000 (0.00)	+.100 (2.54)

Shell size	Arrangement number	Number of contacts	Size contacts	Service rating	Contact location	Supersedes
28	-10	1	12	D	G	MS33688-10
		2	12	A	A,F	
		2	8	A	B,E	
		2	4	A	C,D	

Alternate insert positions			
A degrees (A°)			
W	X	Y	Z
80	110	250	280

FIGURE 10. Insert arrangement, electrical connector, shell size 28, MIL-DTL-22992, classes C, J and R, MIL-DTL-83723, series II, SAE-AS50151 and SAE-AS95234 – Continued.

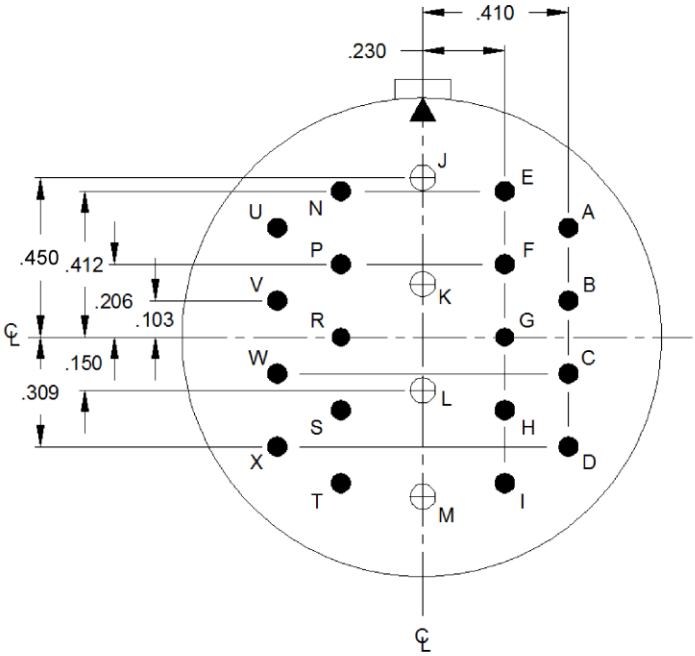

28-11

Contacts (Insert arrangement 28-11)		
Contact position ID	Contact location	
	X-axis (mm)	Y-axis (mm)
A	+.410 (10.41)	+.309 (7.85)
B	+.410 (10.41)	+.103 (2.62)
C	+.410 (10.41)	-.103 (2.62)
D	+.410 (10.41)	-.309 (7.85)
E	+.230 (5.84)	+.412 (10.46)
F	+.230 (5.84)	+.206 (5.23)
G	+.230 (5.84)	+.000 (0.00)
H	+.230 (5.84)	-.206 (5.23)
I	+.230 (5.84)	-.412 (10.46)
J	+.000 (0.00)	+.450 (11.43)
K	+.000 (0.00)	+.150 (3.81)

Contacts (Insert arrangement 28-11)		
Contact position ID	Contact location	
	X-axis (mm)	Y-axis (mm)
L	+.000 (0.00)	-.150 (3.81)
M	+.000 (0.00)	-.450 (11.43)
N	-.230 (5.84)	+.412 (10.46)
P	-.230 (5.84)	+.206 (5.23)
R	-.230 (5.84)	+.000 (0.00)
S	-.230 (5.84)	-.206 (5.23)
T	-.230 (5.84)	-.412 (10.46)
U	-.410 (10.41)	+.309 (7.85)
V	-.410 (10.41)	+.103 (2.62)
W	-.410 (10.41)	-.103 (2.62)
X	-.410 (10.41)	-.309 (7.85)

Shell size	Arrangement number	Number of contacts	Size contacts	Service rating	Contact location	Supersedes
28	-11	18	16	A	All others	MS33688-11
		4	12	A	J,K,L,M	

Alternate insert positions			
A degrees (A°)			
W	X	Y	Z
80	110	250	280

FIGURE 10. Insert arrangement, electrical connector, shell size 28, MIL-DTL-22992, classes C, J and R, MIL-DTL-83723, series II, SAE-AS50151 and SAE-AS95234 – Continued.

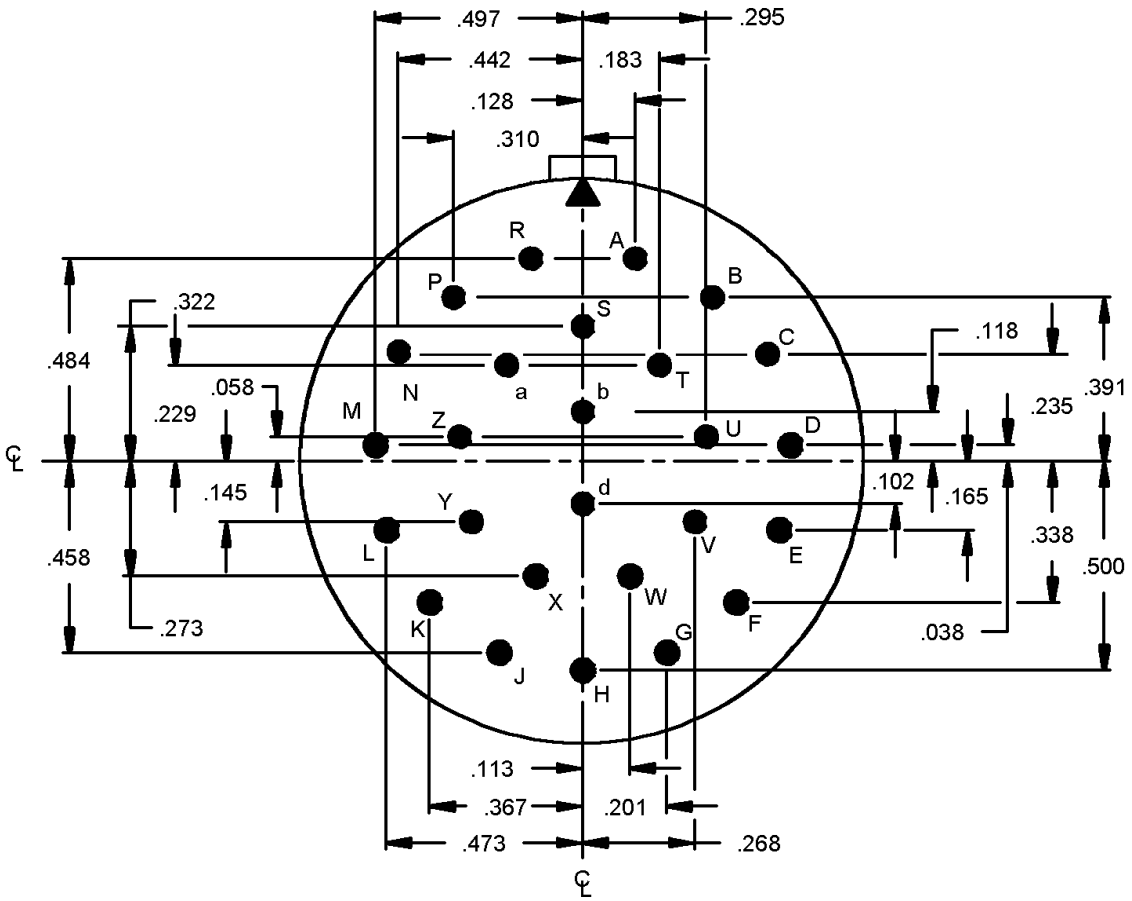

28-12

Contacts (Insert arrangement 28-12)		
Contact position ID	Contact location	
	X-axis (mm)	Y-axis (mm)
A	+.128 (3.25)	+.484 (12.29)
B	+.310 (7.87)	+.391 (9.93)
C	+.442 (11.23)	+.235 (5.97)
D	+.497 (12.62)	+.038 (0.97)
E	+.473 (12.01)	-.165 (4.19)
F	+.367 (9.32)	-.338 (8.59)
G	+.201 (5.11)	-.458 (11.63)
H	+.000 (0.00)	-.500 (12.70)
J	-.201 (5.11)	-.458 (11.63)
K	-.367 (9.32)	-.338 (8.59)
L	-.473 (12.01)	-.165 (4.19)
M	-.497 (12.62)	+.038 (0.97)
N	-.442 (11.23)	+.235 (5.97)

Contacts (Insert arrangement 28-12)		
Contact position ID	Contact location	
	X-axis (mm)	Y-axis (mm)
P	-.310 (7.87)	+.391 (9.93)
R	-.128 (3.25)	+.484 (12.29)
S	+.000 (0.00)	+.322 (8.18)
T	+.183 (4.65)	+.229 (5.82)
U	+.295 (7.49)	+.058 (1.47)
V	+.268 (6.81)	-.145 (3.68)
W	+.113 (2.87)	-.273 (6.93)
X	-.113 (2.87)	-.273 (6.93)
Y	-.268 (6.81)	-.145 (3.68)
Z	-.295 (7.49)	+.058 (147)
a	-.183 (4.65)	+.229 (5.82)
b	+.000 (0.00)	+.118 (3.00)
d	+.000 (0.00)	-.102 (2.59)

FIGURE 10. Insert arrangement, electrical connector, shell size 28, MIL-DTL-22992, classes C, J and R, MIL-DTL-83723, series II, SAE-AS50151 and SAE-AS95234 – Continued.

Insert arrangement 28-12						
Shell size	Arrangement number	Number of contacts	Size contacts	Service rating	Contact location	Supersedes
28	-12	26	16	A	All	MS33688-12

Alternate insert positions			
A degrees (A°)			
W	X	Y	Z
90	180	270	---

FIGURE 10. Insert arrangement, electrical connector, shell size 28, MIL-DTL-22992, classes C, J and R, MIL-DTL-83723, series II, SAE-AS50151 and SAE-AS95234 – Continued.

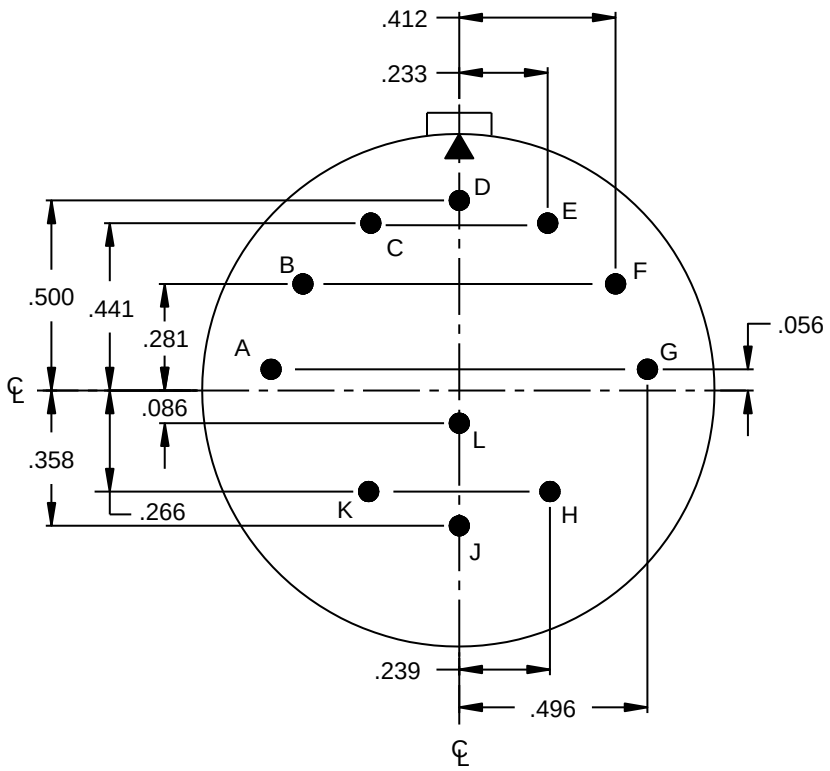

28-14

(Inactive for New Design after 13 May 1954 for SAE-AS50151 and MIL-DTL-83723 series II. Active for new design for SAE-AS95234.)

(Not applicable to MIL-DTL-22992.)

Contacts (Insert arrangement 28-14)		
Contact position ID	Contact location	
	X-axis (mm)	Y-axis (mm)
A	-.496 (12.60)	+.056 (1.42)
B	-.412 (10.46)	+.281 (7.14)
C	-.233 (5.92)	+.441 (11.20)
D	+.000 (0.00)	+.500 (12.70)
E	+.233 (5.92)	+.441 (11.20)
F	+.412 (10.46)	+.281 (7.14)

Contacts (Insert arrangement 28-14)		
Contact position ID	Contact location	
	X-axis (mm)	Y-axis (mm)
G	+.496 (12.60)	+.056 (1.42)
H	+.239 (6.07)	-.266 (6.76)
J	+.000 (0.00)	-.358 (9.09)
K	-.239 (6.07)	-.266 (6.76)
L	+.000 (0.00)	-.086 (2.18)
---	---	---

Shell size	Arrangement number	Number of contacts	Size contacts	Service rating	Contact location	Supersedes
28	-14	11	16	D	All	MS33688-14

Alternate insert positions			
A degrees (A°)			
W	X	Y	Z
80	110	250	280

FIGURE 10. Insert arrangement, electrical connector, shell size 28, MIL-DTL-22992, classes C, J and R, MIL-DTL-83723, series II, SAE-AS50151 and SAE-AS95234 – Continued.

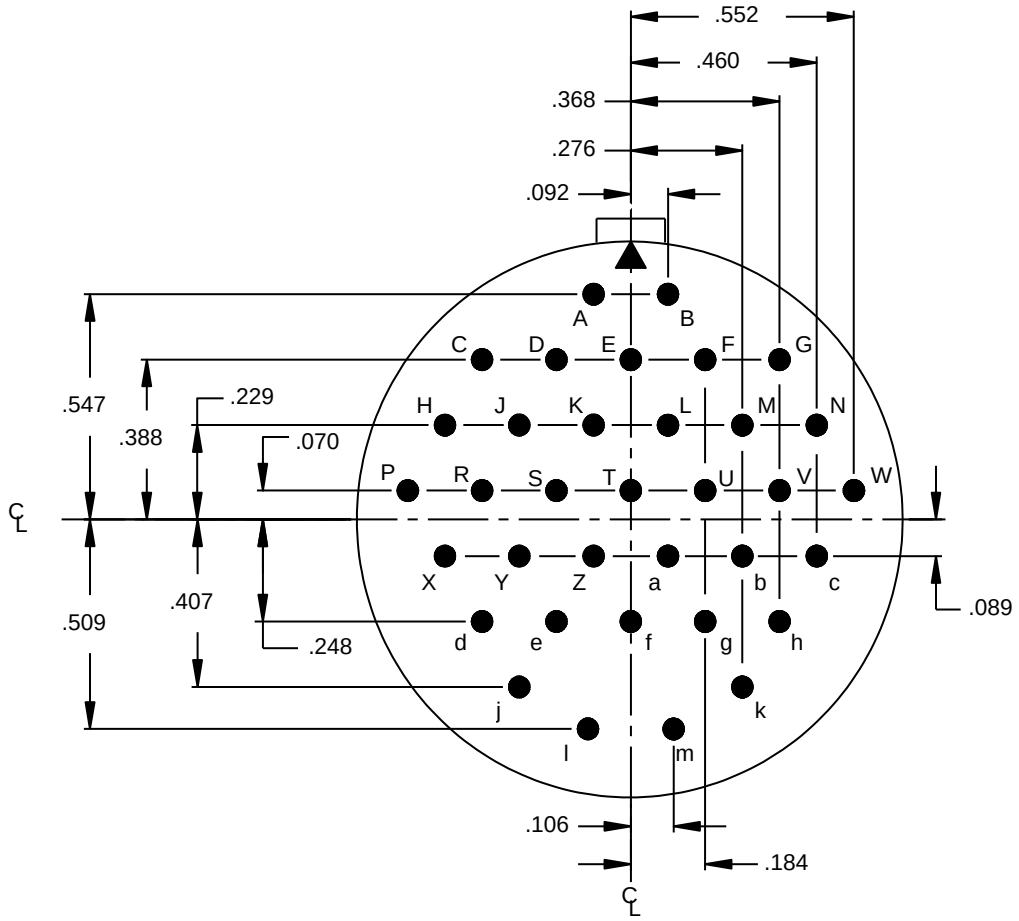

28-15

(Inactive for New Design of Air Force Airborne Equipment after 13 May 1954 for SAE-AS50151 and MIL-DTL-83723 series II. Active for new design for SAE-AS95234.)

Contacts (Insert arrangement 28-15)		
Contact position identification (ID)	Contact location	
	X-axis (mm)	Y-axis (mm)
A	-.092 (2.34)	+.547 (13.89)
B	+.092 (2.34)	+.547 (13.89)
C	-.368 (9.35)	+.388 (9.86)
D	-.184 (4.67)	+.388 (9.86)
E	+.000 (0.00)	+.388 (9.86)
F	+.184 (4.67)	+.388 (9.86)
G	+.368 (9.35)	+.388 (9.86)
H	-.460 (11.68)	+.229 (5.82)
J	-.276 (7.01)	+.229 (5.82)

FIGURE 10. Insert arrangement, electrical connector, shell size 28, MIL-DTL-22992, classes C, J and R, MIL-DTL-83723, series II, SAE-AS50151 and SAE-AS95234 – Continued.

Contacts (Insert arrangement 28-15)		
Contact position identification (ID)	Contact location	
	X-axis (mm)	Y-axis (mm)
K	-.092 (2.34)	+.229 (5.82)
L	+.092 (2.34)	+.229 (5.82)
M	+.276 (7.01)	+.229 (5.82)
N	+.460 (11.68)	+.229 (5.82)
P	-.552 (14.02)	+.070 (1.78)
R	-.368 (9.35)	+.070 (1.78)
S	-.184 (4.67)	+.070 (1.78)
T	+.000 (0.00)	+.070 (1.78)
U	+.184 (4.67)	+.070 (1.78)
V	+.368 (9.35)	+.070 (1.78)
W	+.552 (14.02)	+.070 (1.78)
X	-.460 (11.68)	-.089 (2.26)
Y	+.276 (7.01)	-.089 (2.26)
Z	-.092 (2.34)	-.089 (2.26)
a	+.092 (2.34)	-.089 (2.26)
b	+.276 (7.01)	-.089 (2.26)
c	+.460 (11.68)	-.089 (2.26)
d	-.368 (9.35)	-.248 (6.30)
e	-.184 (4.67)	-.248 (6.30)
f	+.000 (0.00)	-.248 (6.30)
g	+.184 (4.67)	-.248 (6.30)
h	+.368 (9.35)	-.248 (6.30)
j	-.276 (7.01)	-.407 (10.34)
k	+.276 (7.01)	-.407 (10.34)
l	-.106 (2.69)	-.509 (12.93)
m	+.106 (2.69)	-.509 (12.93)

Shell size	Arrangement number	Number of contacts	Size contacts	Service rating	Contact location	Supersedes
28	-15	35	16	A	All	MS33688-15

Alternate insert positions			
A degrees (A°)			
W	X	Y	Z
80	110	250	280

FIGURE 10. Insert arrangement, electrical connector, shell size 28, MIL-DTL-22992, classes C, J and R, MIL-DTL-83723, series II, SAE-AS50151 and SAE-AS95234 – Continued.

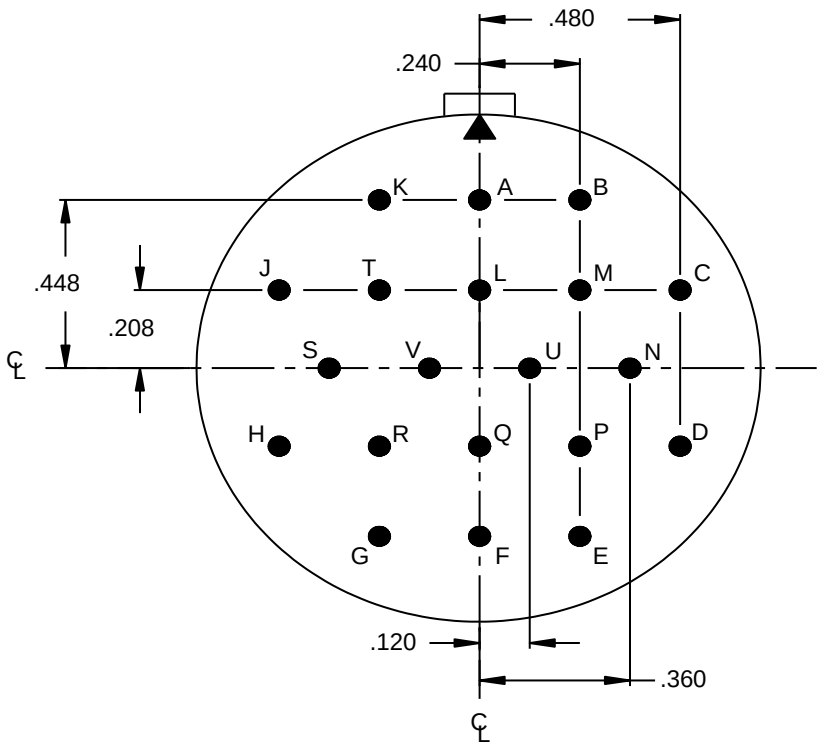

28-16

(Inactive for New Design after 13 May 1954 for SAE-AS50151 and MIL-DTL-83723 series II. Active for new design for SAE-AS95234.)

(Not applicable to MIL-DTL-22992.)

Contacts (Insert arrangement 28-16)		
Contact position ID	Contact location	
	X-axis (mm)	Y-axis (mm)
A	+.000 (0.00)	+.448 (11.38)
B	+.240 (6.10)	+.448 (11.38)
C	+.480 (12.19)	+.208 (5.28)
D	+.480 (12.19)	-.208 (5.28)
E	+.240 (6.10)	-.448 (11.38)
F	+.000 (0.00)	-.448 (11.38)
G	-.240 (6.10)	-.448 (11.38)
H	-.480 (12.19)	-.208 (5.28)
J	-.480 (12.19)	+.208 (5.28)
K	-.240 (6.10)	+.448 (11.38)

Contacts (Insert arrangement 28-16)		
Contact position ID	Contact location	
	X-axis (mm)	Y-axis (mm)
L	+.000 (0.00)	+.208 (5.28)
M	+.240 (6.10)	+.208 (5.28)
N	+.360 (9.14)	+.000 (0.00)
P	+.240 (6.10)	-.208 (5.28)
Q	+.000 (0.00)	-.208 (5.28)
R	-.240 (6.10)	-.208 (5.28)
S	-.360 (9.14)	+.000 (0.00)
T	-.240 (6.10)	+.208 (5.28)
V	-.120 (3.05)	+.000 (0.00)
U	+.120 (3.05)	+.000 (0.00)

FIGURE 10. Insert arrangement, electrical connector, shell size 28, MIL-DTL-22992, classes C, J and R, MIL-DTL-83723, series II, SAE-AS50151 and SAE-AS95234 – Continued.

Insert arrangement 28-16						
Shell size	Arrangement number	Number of contacts	Size contacts	Service rating	Contact location	Supersedes
28	-16	20	16	A	All	MS33688-16

Alternate insert positions			
A degrees (A°)			
W	X	Y	Z
80	110	250	280

FIGURE 10. Insert arrangement, electrical connector, shell size 28, MIL-DTL-22992, classes C, J and R, MIL-DTL-83723, series II, SAE-AS50151 and SAE-AS95234 – Continued.

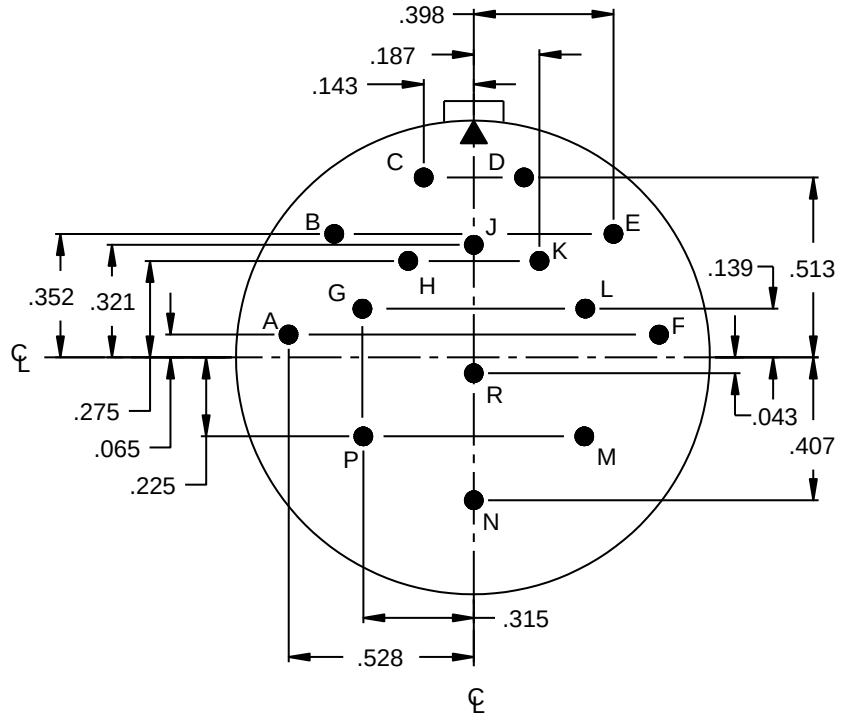

28-17

Contacts (Insert arrangement 28-17)		
Contact position ID	Contact location	
	X-axis (mm)	Y-axis (mm)
A	-.528 (13.41)	+.065 (1.65)
B	-.398 (10.11)	+.352 (8.94)
C	-.143 (3.63)	+.513 (13.03)
D	+.143 (3.63)	+.513 (13.03)
E	+.398 (10.11)	+.352 (8.94)
F	+.528 (13.41)	+.065 (1.65)
G	-.315 (8.00)	+.139 (3.53)
H	-.187 (4.75)	+.275 (6.99)

Contacts (Insert arrangement 28-17)		
Contact position ID	Contact location	
	X-axis (mm)	Y-axis (mm)
J	+.000 (0.00)	+.321 (8.15)
K	+.187 (4.75)	+.275 (6.99)
L	+.315 (8.00)	+.139 (3.53)
M	+.315 (8.00)	-.225 (5.72)
N	+.000 (0.00)	-.407 (10.34)
P	-.315 (8.00)	-.225 (5.72)
R	+.000 (0.00)	-.043 (1.09)
---	---	---

Shell size	Arrangement number	Number of contacts	Size contacts	Service rating	Contact location	Supersedes
28	-17	1	16	B	R	MS33688-17
		3		D	M,N,P	
		11		A	All others	

Alternate insert positions			
A degrees (A°)			
W	X	Y	Z
80	110	250	280

FIGURE 10. Insert arrangement, electrical connector, shell size 28, MIL-DTL-22992, classes C, J and R, MIL-DTL-83723, series II, SAE-AS50151 and SAE-AS95234 – Continued.

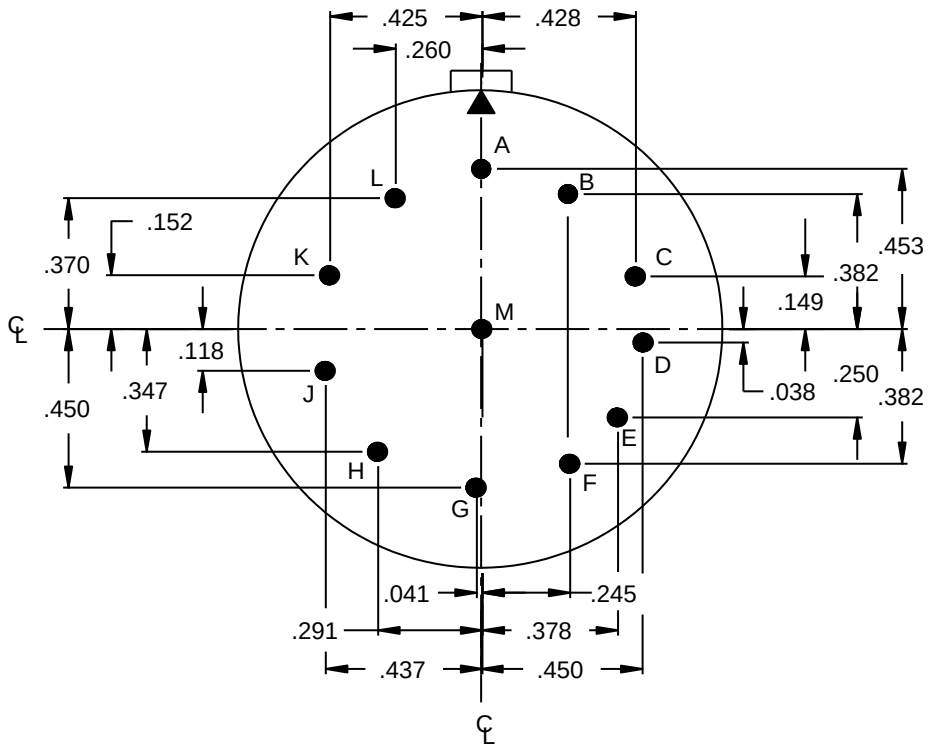

28-18

Contacts (Insert arrangement 28-18)		
Contact position ID	Contact location	
	X-axis (mm)	Y-axis (mm)
A	+.000 (0.00)	+.453 (11.51)
B	+.245 (6.22)	+.382 (9.70)
C	+.428 (10.87)	+.149 (3.78)
D	+.450 (11.43)	-.038 (0.00)
E	+.378 (9.60)	-.250 (6.35)
F	+.245 (6.22)	-.382 (9.70)

Contacts (Insert arrangement 28-18)		
Contact position ID	Contact location	
	X-axis (mm)	Y-axis (mm)
G	-.041 (1.04)	-.450 (11.43)
H	-.291 (7.39)	-.347 (8.81)
J	-.437 (11.10)	-.118 (3.00)
K	-.425 (10.80)	+.152 (3.86)
L	-.260 (0.00)	+.370 (9.40)
M	+.000 (0.00)	+.000 (0.00)

Shell size	Arrangement number	Number of contacts	Size contacts	Service rating	Contact location	Supersedes
28	-18	1	16	C	M	MS33688-18
		2		A	A,B	
		4		INST	C,D,E,F	
		5		D	All others	

Alternate insert positions			
A degrees (A°)			
W	X	Y	Z
70	145	215	290

FIGURE 10. Insert arrangement, electrical connector, shell size 28, MIL-DTL-22992, classes C, J and R, MIL-DTL-83723, series II, SAE-AS50151 and SAE-AS95234 – Continued.

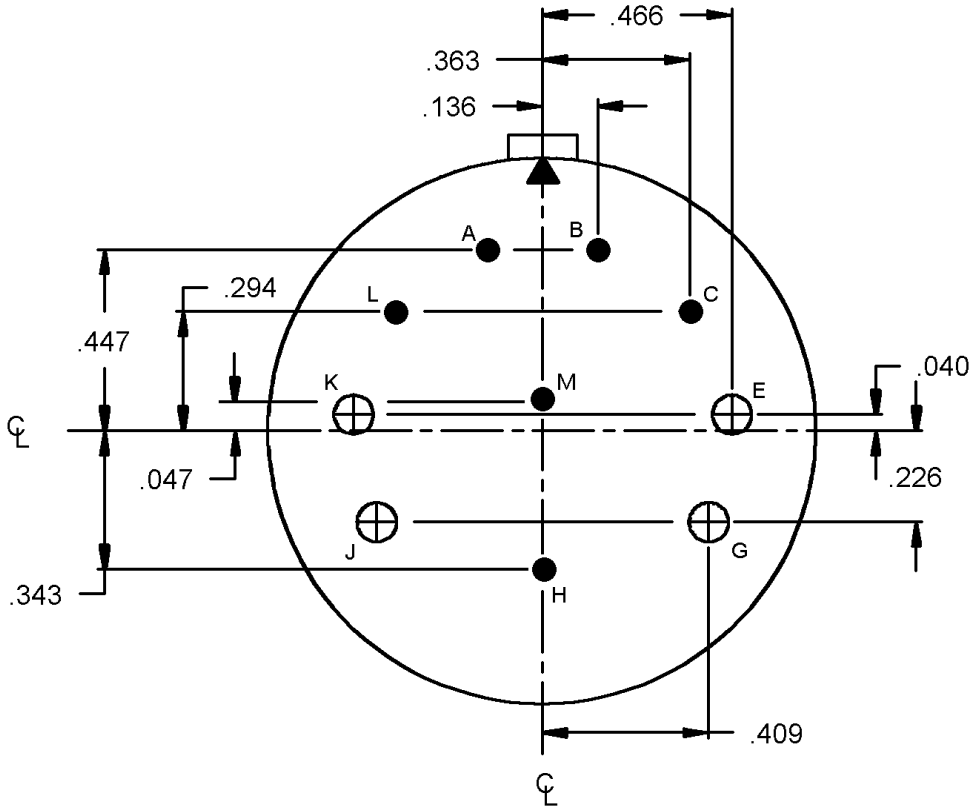

28-19

Contacts (Insert arrangement 28-19)		
Contact position ID	Contact location	
	X-axis (mm)	Y-axis (mm)
A	-.136 (3.45)	+.447 (11.35)
B	+.136 (3.45)	+.447 (11.35)
C	+.363 (9.22)	+.294 (7.47)
E	+.466 (11.84)	+.040 (1.02)
G	+.409 (10.39)	-.226 (5.74)

Contacts (Insert arrangement 28-19)		
Contact position ID	Contact location	
	X-axis (mm)	Y-axis (mm)
H	+.000 (0.00)	-.343 (8.71)
J	-.409 (10.39)	-.226 (5.74)
K	-.466 (11.84)	+.040 (1.02)
L	-.363 (9.22)	+.294 (7.47)
M	+.000 (0.00)	+.047 (1.19)

Shell size	Arrangement number	Number of contacts	Size contacts	Service rating	Contact location	Supersedes
28	-19	2	16	B	H,M	MS33688-19
		2	16	D	A,B	
		2	16	A	C.L	
		4	12		E,G,J,K	

Alternate insert positions			
A degrees (A°)			
W	X	Y	Z
80	110	250	280

FIGURE 10. Insert arrangement, electrical connector, shell size 28, MIL-DTL-22992, classes C, J and R, MIL-DTL-83723, series II, SAE-AS50151 and SAE-AS95234 – Continued.

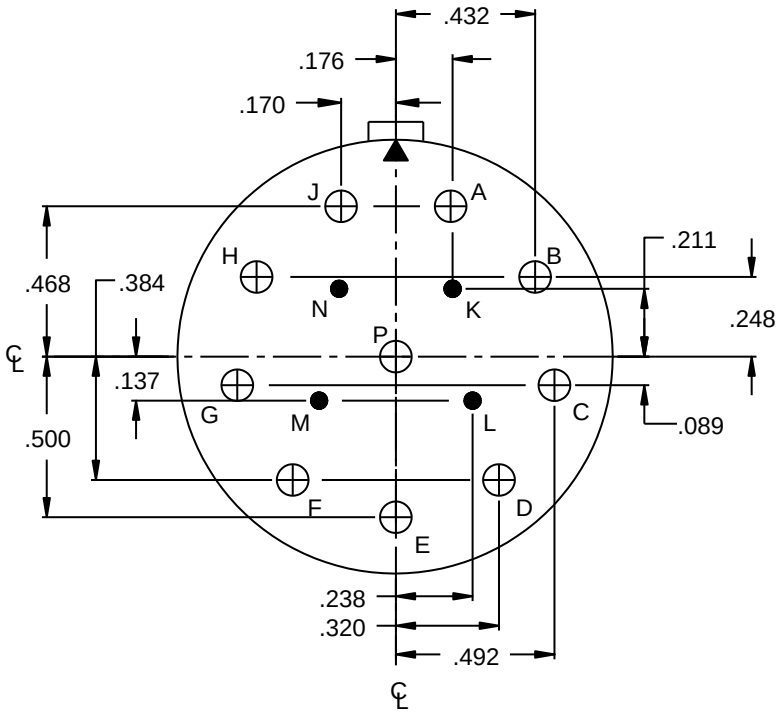

28-20

Contacts (Insert arrangement 28-20)		
Contact position ID	Contact location	
	X-axis (mm)	Y-axis (mm)
A	+.170 (4.32)	+.468 (11.89)
B	+.432 (10.97)	+.248 (6.30)
C	+.492 (12.50)	-.089 (2.26)
D	+.320 (8.13)	-.384 (9.75)
E	+.000 (0.00)	-.500 (12.70)
F	-.320 (8.13)	-.384 (9.75)
G	-.492 (12.50)	-.089 (2.26)

Contacts (Insert arrangement 28-20)		
Contact position ID	Contact location	
	X-axis (mm)	Y-axis (mm)
H	-.432 (10.97)	+.248 (6.30)
J	-.170 (4.32)	+.468 (11.89)
K	+.176 (4.47)	+.211 (5.36)
L	+.238 (6.05)	-.137 (3.48)
M	-.238 (6.05)	-.137 (3.48)
N	-.176 (4.47)	+.211 (5.36)
P	+.000 (0.00)	+.000 (0.00)

Shell size	Arrangement number	Number of contacts	Size contacts	Service rating	Contact location	Supersedes
28	-20	4	16	A	K,L,M,N	MS33688-20
		10	12		All others	

Alternate insert positions			
A degrees (A°)			
W	X	Y	Z
80	110	250	280

FIGURE 10. Insert arrangement, electrical connector, shell size 28, MIL-DTL-22992, classes C, J and R, MIL-DTL-83723, series II, SAE-AS50151 and SAE-AS95234 – Continued.

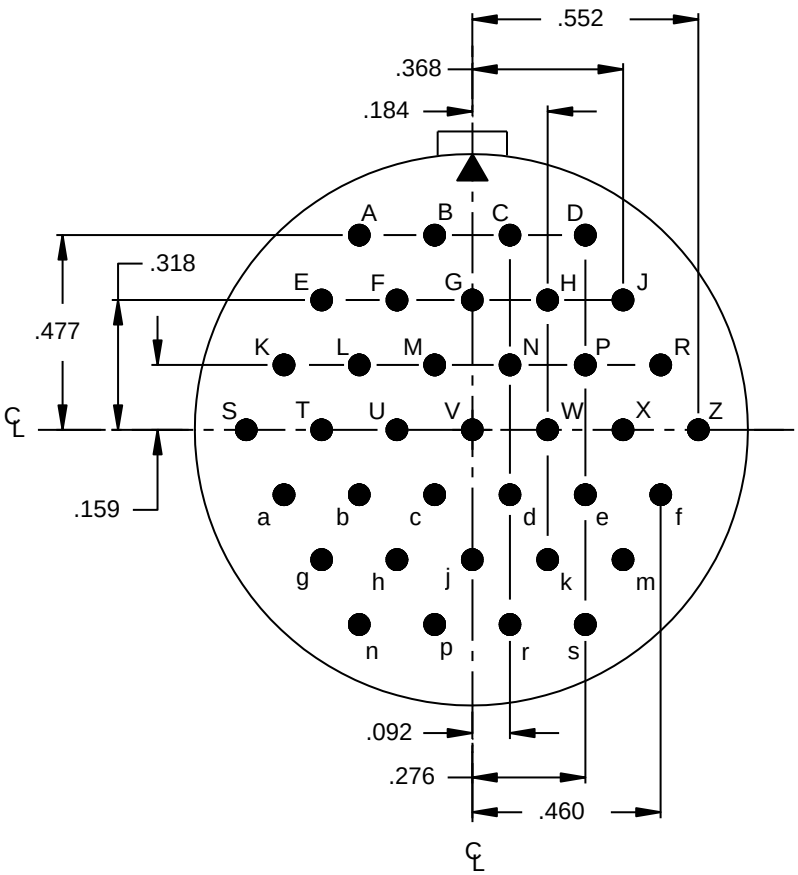

28-21

Contacts (Insert arrangement 28-21)		
Contact position identification (ID)	Contact location	
	X-axis (mm)	Y-axis (mm)
A	-.276 (7.01)	+.477 (12.12)
B	-.092 (2.34)	+.477 (12.12)
C	+.092 (2.34)	+.477 (12.12)
D	+.276 (7.01)	+.477 (12.12)
E	-.368 (9.35)	+.318 (8.08)
F	-.184 (4.67)	+.318 (8.08)
G	+.000 (0.00)	+.318 (8.08)
H	+.184 (4.67)	+.318 (8.08)
J	+.368 (9.35)	+.318 (8.08)
K	-.460 (11.68)	+.159 (4.04)
L	-.276 (7.01)	+.159 (4.04)
M	-.092 (2.34)	+.159 (4.04)
N	+.092 (2.34)	+.159 (4.04)

FIGURE 10. Insert arrangement, electrical connector, shell size 28, MIL-DTL-22992, classes C, J and R, MIL-DTL-83723, series II, SAE-AS50151 and SAE-AS95234 – Continued.

Contacts (Insert arrangement 28-21)		
Contact position identification (ID)	Contact location	
	X-axis (mm)	Y-axis (mm)
P	+.276 (7.01)	+.159 (4.04)
R	+.460 (11.68)	+.159 (4.04)
S	-.552 (14.02)	+.000 (0.00)
T	-.368 (9.35)	+.000 (0.00)
U	-.184 (4.67)	+.000 (0.00)
V	+.000 (0.00)	+.000 (0.00)
W	+.184 (4.67)	+.000 (0.00)
X	+.368 (9.35)	+.000 (0.00)
Z	+.552 (14.02)	+.000 (0.00)
a	-.460 (11.68)	-.159 (4.04)
b	-.276 (7.01)	-.159 (4.04)
c	-.092 (0.00)	-.159 (4.04)
d	+.092 (0.00)	-.159 (4.04)
e	+.276 (7.01)	-.159 (4.04)
f	+.460 (11.68)	-.159 (4.04)
g	-.368 (9.35)	-.318 (8.08)
h	-.184 (4.67)	-.318 (8.08)
j	+.000 (0.00)	-.318 (8.08)
k	+.184 (4.67)	-.318 (8.08)
m	+.368 (9.35)	-.318 (8.08)
n	-.276 (7.01)	-.477 (12.12)
p	-.092 (0.00)	-.477 (12.12)
r	+.092 (0.00)	-.477 (12.12)
s	+.276 (7.01)	-.477 (12.12)

Shell size	Arrangement number	Number of contacts	Size contacts	Service rating	Contact location	Supersedes
28	-21	37	16	A	All	MS33688-21

Alternate insert positions			
A degrees (A°)			
W	X	Y	Z
80	110	250	280

FIGURE 10. Insert arrangement, electrical connector, shell size 28, MIL-DTL-22992, classes C, J and R, MIL-DTL-83723, series II, SAE-AS50151 and SAE-AS95234 – Continued.

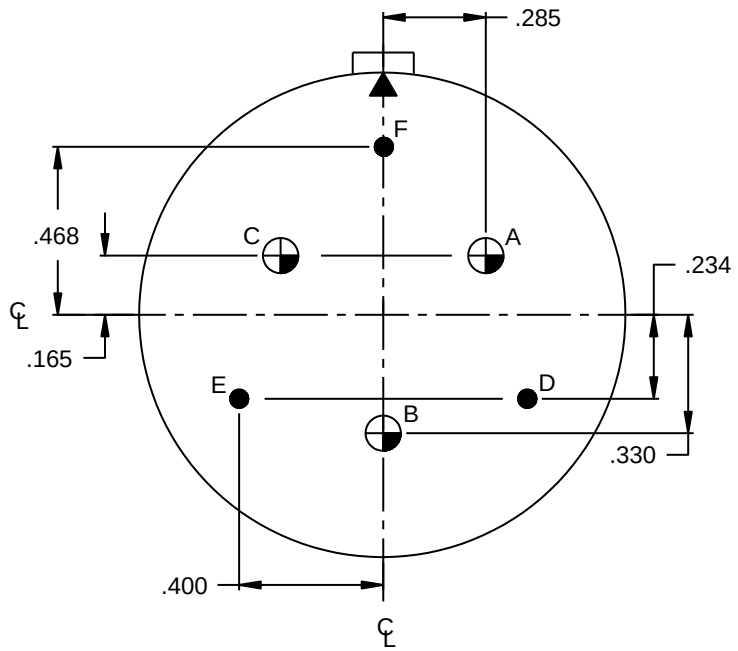

28-22

Contacts (Insert arrangement 28-22)		
Contact position identification (ID)	Contact location	
	X-axis (mm)	Y-axis (mm)
A	+.285 (7.24)	+.165 (4.19)
B	+.000 (0.00)	-.330 (8.38)
C	-.285 (7.24)	+.165 (4.19)
D	+.400 (10.16)	-.234 (5.94)
E	-.400 (10.16)	-.234 (5.94)
F	+.000 (0.00)	+.468 (0.00)

Shell size	Arrangement number	Number of contacts	Size contacts	Service rating	Contact location	Supersedes
28	-22	3	16	D	E,F,D	MS33688-22
		3	4		A,B,C	

Alternate insert positions			
A degrees (A°)			
W	X	Y	Z
70	145	215	290

FIGURE 10. Insert arrangement, electrical connector, shell size 28, MIL-DTL-22992, classes C, J and R, MIL-DTL-83723, series II, SAE-AS50151 and SAE-AS95234 – Continued.

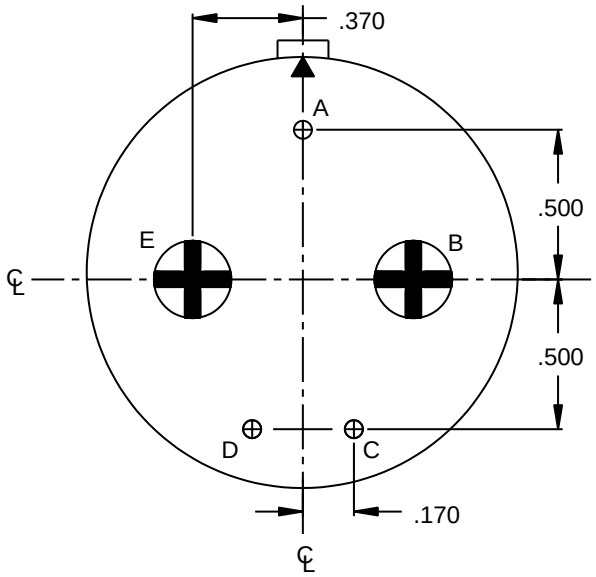

32-1

Contacts (Insert arrangement 32-1)		
Contact position identification (ID)	Contact location	
	X-axis (mm)	Y-axis (mm)
A	+.000 (0.00)	+.500 (12.70)
B	+.370 (9.40)	+.000 (0.00)
C	+.170 (4.32)	-.500 (12.70)
D	-.170 (4.32)	-.500 (12.70)
E	-.370 (9.40)	+.000 (0.00)

Shell size	Arrangement number	Number of contacts	Size contacts	Service rating	Contact location	Supersedes
32	-1	1	12	E	A	MS33689-1
		2	12	D	C,D	
		2	0	D	B,E	

Alternate insert positions			
A degrees (A°)			
W	X	Y	Z
80	110	250	280

FIGURE 11. Insert arrangement, electrical connector, shell size 32, MIL-DTL-22992, classes C, J and R, MIL-DTL-83723, series II, and SAE-AS50151 and SAE-AS95234.

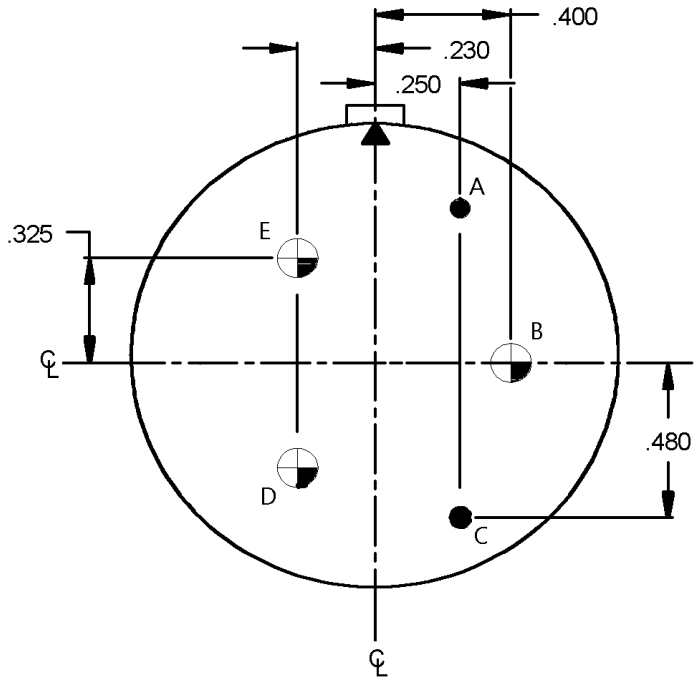

32-2

Contacts (Insert arrangement 32-2)		
Contact position identification (ID)	Contact location	
	X-axis (mm)	Y-axis (mm)
A	+.250 (6.35)	+.480 (12.19)
B	+.400 (10.16)	+.000 (0.00)
C	+.250 (6.35)	-.480 (12.19)
D	-.230 (5.84)	-.325 (8.26)
E	-.230 (5.84)	+.325 (8.26)

Shell size	Arrangement number	Number of contacts	Size contacts	Service rating	Contact location	Supersedes
32	-2	2	16	E	A,C	MS33689-2
		3	4		B,D,E	

Alternate insert positions			
A degrees (A°)			
W	X	Y	Z
70	145	215	290

FIGURE 11. Insert arrangement, electrical connector, shell size 32, MIL-DTL-22992, classes C, J and R, MIL-DTL-83723, series II, and SAE-AS50151 and SAE-AS95234 – Continued.

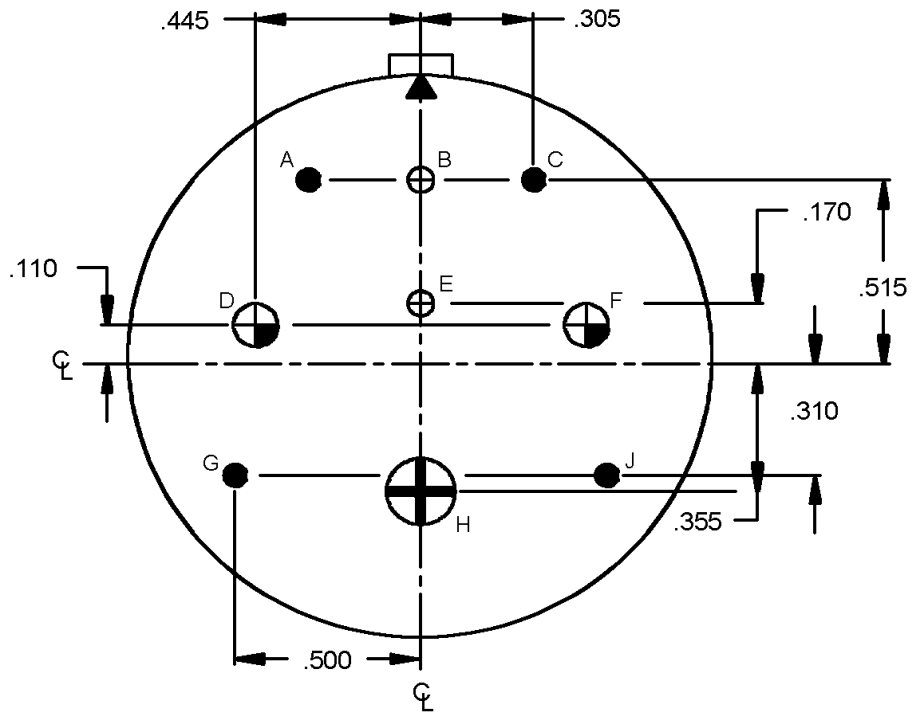

32-3

Contacts (Insert arrangement 32-3)		
Contact position identification (ID)	Contact location	
	X-axis (mm)	Y-axis (mm)
A	-.305 (7.75)	+.515 (13.08)
B	+.000 (0.00)	+.515 (13.08)
C	+.305 (7.75)	+.515 (13.08)
D	-.445 (11.30)	+.110 (2.79)
E	+.000 (0.00)	+.170 (4.32)
F	+.445 (11.30)	+.110 (2.79)
G	-.500 (12.70)	-.310 (7.87)
H	+.000 (0.00)	-.355 (9.02)
J	+.500 (12.70)	-.310 (7.87)

Shell size	Arrangement number	Number of contacts	Size contacts	Service rating	Contact location	Supersedes
32	-3	4	16	D	A,C,J,G	MS33689-3
		2	12		B,E	
		2	4		D,F	
		1	0		H	

Alternate insert positions			
A degrees (A°)			
W	X	Y	Z
80	110	250	280

FIGURE 11. Insert arrangement, electrical connector, shell size 32, MIL-DTL-22992, classes C, J and R, MIL-DTL-83723, series II, and SAE-AS50151 and SAE-AS95234 – Continued.

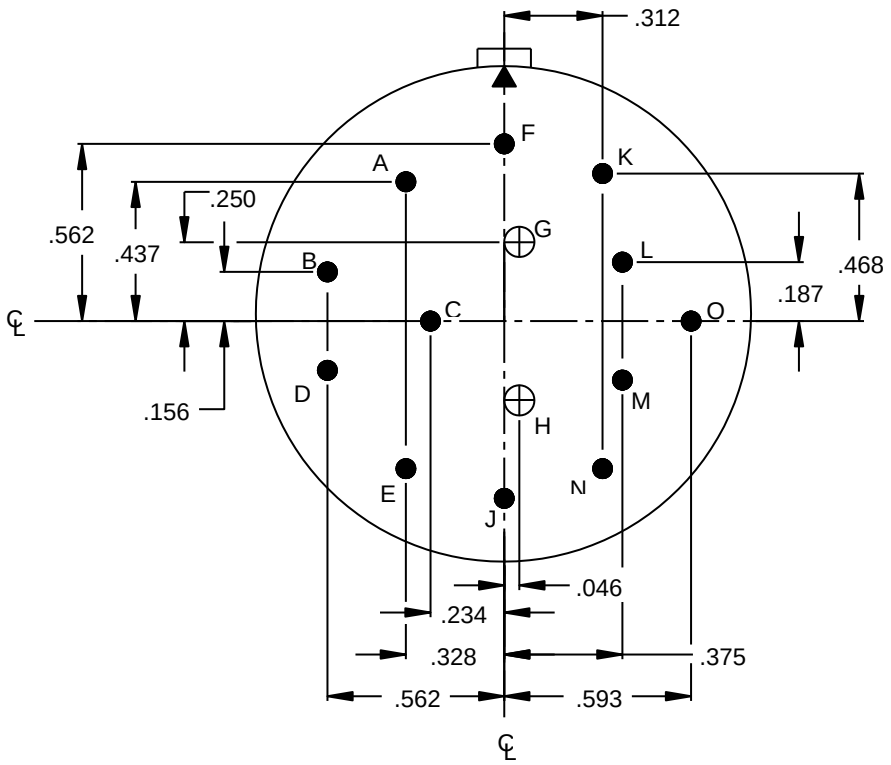

32-4

(Inactive for New Design after 13 May 1954 for SAE-AS50151 and MIL-DTL-83723 series II. Active for new design for SAE-AS95234.)

(Not applicable to MIL-DTL-22992.)

Contacts (Insert arrangement 32-4)		
Contact position (ID)	Contact location	
	X-axis (mm)	Y-axis (mm)
A	-.328 (8.33)	+.437 (11.10)
B	-.562 (14.27)	+.156 (3.96)
C	-.234 (5.94)	+.000 (0.00)
D	-.562 (14.27)	-.156 (3.96)
E	-.328 (8.33)	-.437 (11.10)
F	+.000 (0.00)	+.562 (14.27)
G	+.046 (1.17)	+.250 (6.35)

Contacts (Insert arrangement 32-4)		
Contact position (ID)	Contact location	
	X-axis (mm)	Y-axis (mm)
H	+.046 (1.17)	-.250 (6.35)
J	+.000 (0.00)	-.562 (14.27)
K	+.312 (7.92)	+.468 (11.89)
L	+.375 (9.53)	+.187 (4.75)
M	+.375 (9.53)	-.187 (4.75)
N	+.312 (7.92)	-.468 (11.89)
O	+.593 (15.06)	+.000 (0.00)

Shell size	Arrangement number	Number of contacts	Size contacts	Service rating	Contact location	Supersedes
32	-4	2	12	D	G,H	MS33689-4
		4	16	A	F,J,K,N	
		8	16	D	All others	

FIGURE 11. Insert arrangement, electrical connector, shell size 32, MIL-DTL-22992, classes C, J and R, MIL-DTL-83723, series II, and SAE-AS50151 and SAE-AS95234 – Continued.

Insert arrangement 32-4			
Alternate insert positions			
A degrees (A°)			
W	X	Y	Z
80	110	250	280

FIGURE 11. Insert arrangement, electrical connector, shell size 32, MIL-DTL-22992, classes C, J and R, MIL-DTL-83723, series II, and SAE-AS50151 and SAE-AS95234 – Continued.

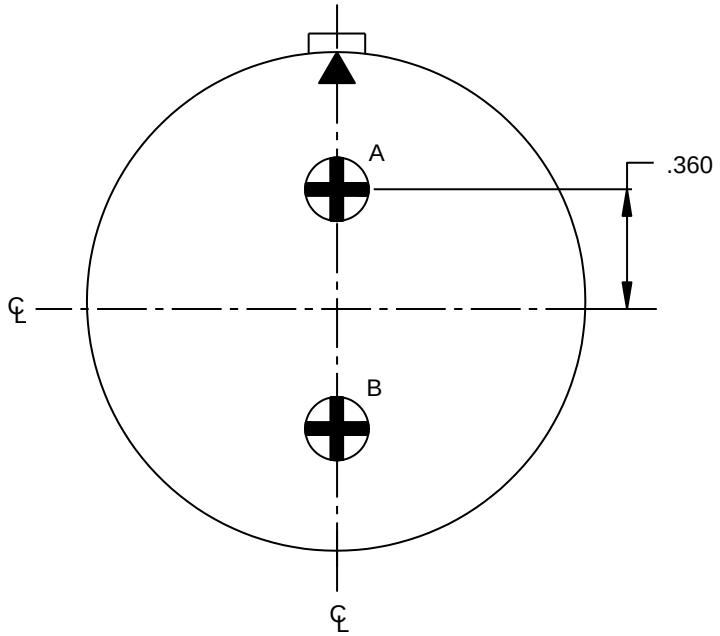

32-5

(Inactive for New Design after 13 May 1954 for SAE-AS50151 and MIL-DTL-83723 series II. Active for new design for SAE-AS95234.)

(Not applicable to MIL-DTL-22992.)

Contacts (Insert arrangement 32-5)		
Contact position identification (ID)	Contact location	
	X-axis (mm)	Y-axis (mm)
A	+.000 (0.00)	+.360 (9.14)
B	+.000 (0.00)	-.360 (9.14)

Shell size	Arrangement number	Number of contacts	Size contacts	Service rating	Contact location	Supersedes
32	-5	2	0	E	All	MS33689-5

Alternate insert positions			
A degrees (A°)			
W	X	Y	Z
80	110	250	325

FIGURE 11. Insert arrangement, electrical connector, shell size 32, MIL-DTL-22992, classes C, J and R, MIL-DTL-83723, series II, and SAE-AS50151 and SAE-AS95234 – Continued.

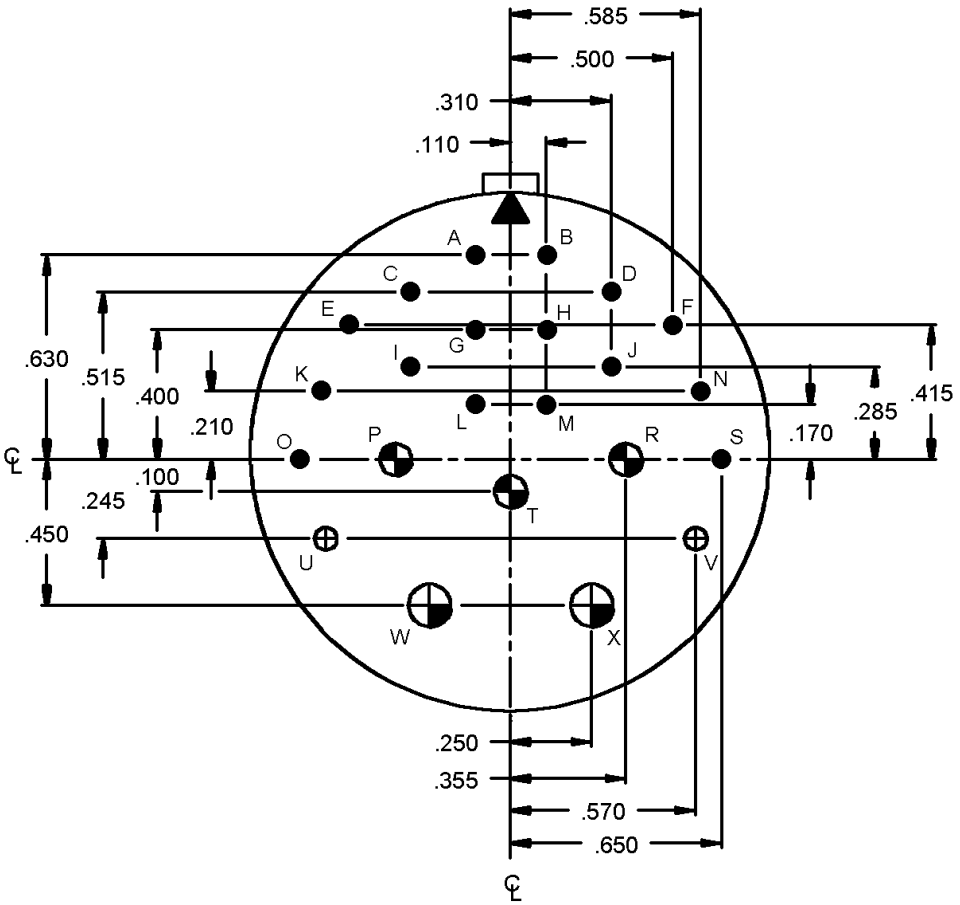

32-6

Contacts (Insert arrangement 32-6)		
Contact position (ID)	Contact location	
	X-axis (mm)	Y-axis (mm)
A	-.110 (2.79)	+.630 (16.00)
B	+.110 (2.79)	+.630 (16.00)
C	-.310 (7.87)	+.515 (13.08)
D	+.310 (7.87)	+.515 (13.08)
E	-.500 (12.70)	+.415 (10.54)
F	+.500 (12.70)	+.415 (10.54)
G	-.110 (2.79)	+.400 (10.16)
H	+.110 (2.79)	+.400 (10.16)
I	-.310 (7.87)	+.285 (7.24)
J	+.310 (7.87)	+.285 (7.24)
K	-.585 (14.86)	+.210 (5.33)
L	-.110 (2.79)	+.170 (4.32)

Contacts (Insert arrangement 32-6)		
Contact position (ID)	Contact location	
	X-axis (mm)	Y-axis (mm)
M	+.110 (2.79)	+.170 (4.32)
N	+.585 (14.86)	+.210 (5.33)
O	-.650 (16.51)	+.000 (0.00)
P	-.355 (9.02)	+.000 (0.00)
R	+.355 (9.02)	+.000 (0.00)
S	+.650 (16.51)	+.000 (0.00)
T	+.000 (0.00)	-.100 (2.54)
U	-.570 (14.48)	-.245 (6.22)
V	+.570 (14.48)	-.245 (6.22)
W	-.250 (6.35)	-.450 (11.43)
X	+.250 (6.35)	-.450 (11.43)
---	---	---

FIGURE 11. Insert arrangement, electrical connector, shell size 32, MIL-DTL-22992, classes C, J and R, MIL-DTL-83723, series II, and SAE-AS50151 and SAE-AS95234 – Continued.

Insert arrangement 32-6						
Shell size	Arrangement number	Number of contacts	Size contacts	Service rating	Contact location	Supersedes
32	-6	16	16	A	All others	MS33689-6
		2	12		U,V	
		3	8		P,R,T	
		2	4		W,X	

Alternate insert positions			
A degrees (A°)			
W	X	Y	Z
80	110	250	280

FIGURE 11. Insert arrangement, electrical connector, shell size 32, MIL-DTL-22992, classes C, J and R, MIL-DTL-83723, series II, and SAE-AS50151 and SAE-AS95234 – Continued.

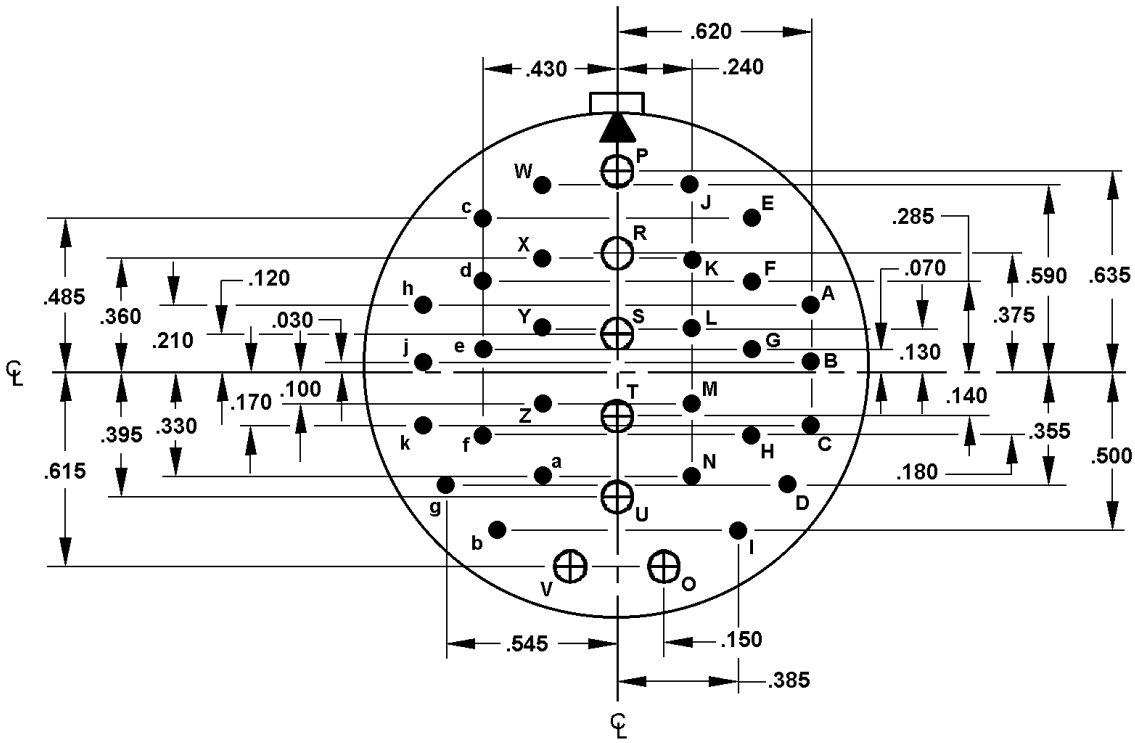

32-7

Contacts (Insert arrangement 32-7)		
Contact position identification (ID)	Contact location	
	X-axis (mm)	Y-axis (mm)
A	+.620 (15.75)	+.210 (5.33)
B	+.620 (15.75)	+.030 (0.76)
C	+.620 (15.75)	-.170 (4.32)
D	+.545 (13.84)	-.355 (9.02)
E	+.430 (10.92)	+.485 (12.32)
F	+.430 (10.92)	+.285 (7.24)
G	+.430 (10.92)	+.070 (1.78)
H	+.430 (10.92)	-.180 (4.57)
I	+.385 (9.78)	-.500 (12.70)
J	+.240 (6.10)	+.590 (14.99)
K	+.240 (6.10)	+.360 (9.14)
L	+.240 (6.10)	+.130 (3.30)
M	+.240 (6.10)	-.100 (2.54)
N	+.240 (6.10)	-.330 (8.38)
O	+.150 (3.81)	-.615 (15.62)

FIGURE 11. Insert arrangement, electrical connector, shell size 32, MIL-DTL-22992, classes C, J and R, MIL-DTL-83723, series II, and SAE-AS50151 and SAE-AS95234 – Continued.

Contacts (Insert Arrangement 32-7)		
Contact position identification (ID)	Contact location	
	X-axis (mm)	Y-axis (mm)
P	+.000 (0.00)	+.635 (16.13)
R	+.000 (0.00)	+.375 (9.35)
S	+.000 (0.00)	+.120 (3.05)
T	+.000 (0.00)	-.140 (3.56)
U	+.000 (0.00)	-.395 (10.03)
V	-.150 (3.81)	-.615 (15.62)
W	-.240 (6.10)	+.590 (14.99)
X	-.240 (6.10)	+.360 (9.14)
Y	-.240 (6.10)	+.130 (3.30)
Z	-.240 (6.10)	-.100 (2.54)
a	-.240 (6.10)	-.330 (8.38)
b	-.385 (9.78)	-.500 (12.70)
c	-.430 (10.92)	+.485 (12.32)
d	-.430 (10.92)	+.285 (7.24)
e	-.430 (10.92)	+.070 (0.76)
f	-.430 (10.92)	-.180 (4.57)
g	-.545 (13.84)	-.355 (9.02)
h	-.620 (15.75)	+.210 (5.33)
j	-.620 (15.75)	+.030 (0.76)
k	-.620 (15.75)	-.170 (4.32)

Shell size	Arrangement number	Number of contacts	Size contacts	Service rating	Contact location	Supersedes
32	-7	4	16	INST	A,B,h,j	MS33689-7
		24	16		All others	
		7	12	A	O,P,S,R,T,U,V	

Alternate insert positions			
A degrees (A°)			
W	X	Y	Z
80	125	235	280

FIGURE 11. Insert arrangement, electrical connector, shell size 32, MIL-DTL-22992, classes C, J and R, MIL-DTL-83723, series II, and SAE-AS50151 and SAE-AS95234 – Continued.

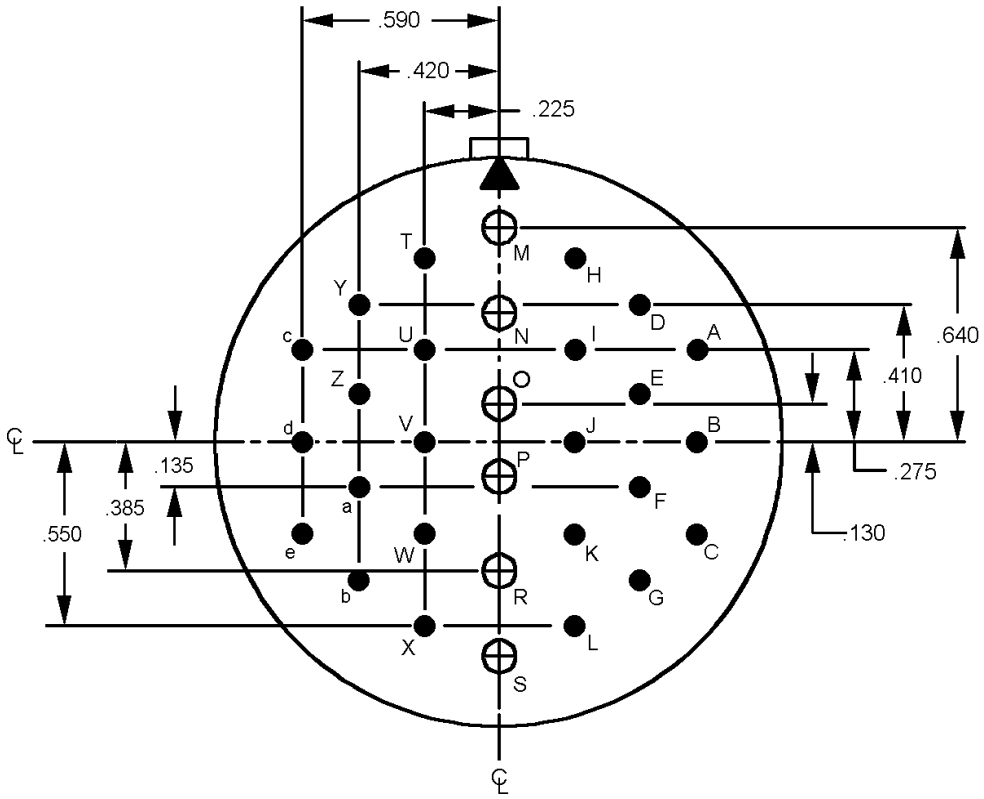

32-8

(Inactive for New Design after 13 May 1954 for SAE-AS50151 and MIL-DTL-83723 series II. Active for new design for SAE-AS95234.)

(Not applicable to MIL-DTL-22992.)

Contacts (Insert arrangement 32-8)		
Contact position identification (ID)	Contact location	
	X-axis (mm)	Y-axis (mm)
A	+.590 (14.99)	+.275 (6.99)
B	+.590 (14.99)	+.000 (0.00)
C	+.590 (14.99)	-.275 (6.99)
D	+.420 (10.67)	+.410 (10.41)
E	+.420 (10.67)	+.135 (3.43)
F	+.420 (10.67)	-.135 (3.43)
G	+.420 (10.67)	-.410 (10.41)
H	+.225 (5.72)	+.550 (13.97)
I	+.225 (5.72)	+.275 (6.99)
J	+.225 (5.72)	+.000 (0.00)
K	+.225 (5.72)	-.275 (6.99)
L	+.225 (5.72)	-.550 (13.97)

FIGURE 11. Insert arrangement, electrical connector, shell size 32, MIL-DTL-22992, classes C, J and R, MIL-DTL-83723, series II, and SAE-AS50151 and SAE-AS95234 – Continued.

Contacts (Insert arrangement 32-8)		
Contact position identification (ID)	Contact location	
	X-axis (mm)	X-axis (mm)
M	+.000 (0.00)	+.640 (16.26)
N	+.000 (0.00)	+.385 (9.78)
O	+.000 (0.00)	+.130 (3.30)
P	+.000 (0.00)	-.130 (3.30)
R	+.000 (0.00)	-.385 (9.78)
S	+.000 (0.00)	-.640 (16.26)
T	-.225 (5.72)	+.550 (13.97)
U	-.225 (5.72)	+.275 (6.99)
V	-.225 (5.72)	+.000 (0.00)
W	-.225 (5.72)	-.275 (6.99)
X	-.225 (5.72)	-.550 (13.97)
Y	-.420 (10.67)	+.410 (10.41)
Z	-.420 (10.67)	+.135 (3.43)
a	-.420 (10.67)	-.135 (3.43)
b	-.420 (10.67)	-.410 (10.41)
c	-.590 (14.99)	+.275 (6.99)
d	-.590 (14.99)	+.000 (0.00)
e	-.590 (14.99)	-.275 (6.99)

Shell size	Arrangement number	Number of contacts	Size contacts	Service rating	Contact location	Supersedes
32	-8	24	16	A	All others	MS33689-8
		6	12		M,N,O,P,R,S	

Alternate insert positions			
A degrees (A°)			
W	X	Y	Z
80	125	235	280

FIGURE 11. Insert arrangement, electrical connector, shell size 32, MIL-DTL-22992, classes C, J and R, MIL-DTL-83723, series II, and SAE-AS50151 and SAE-AS95234 – Continued.

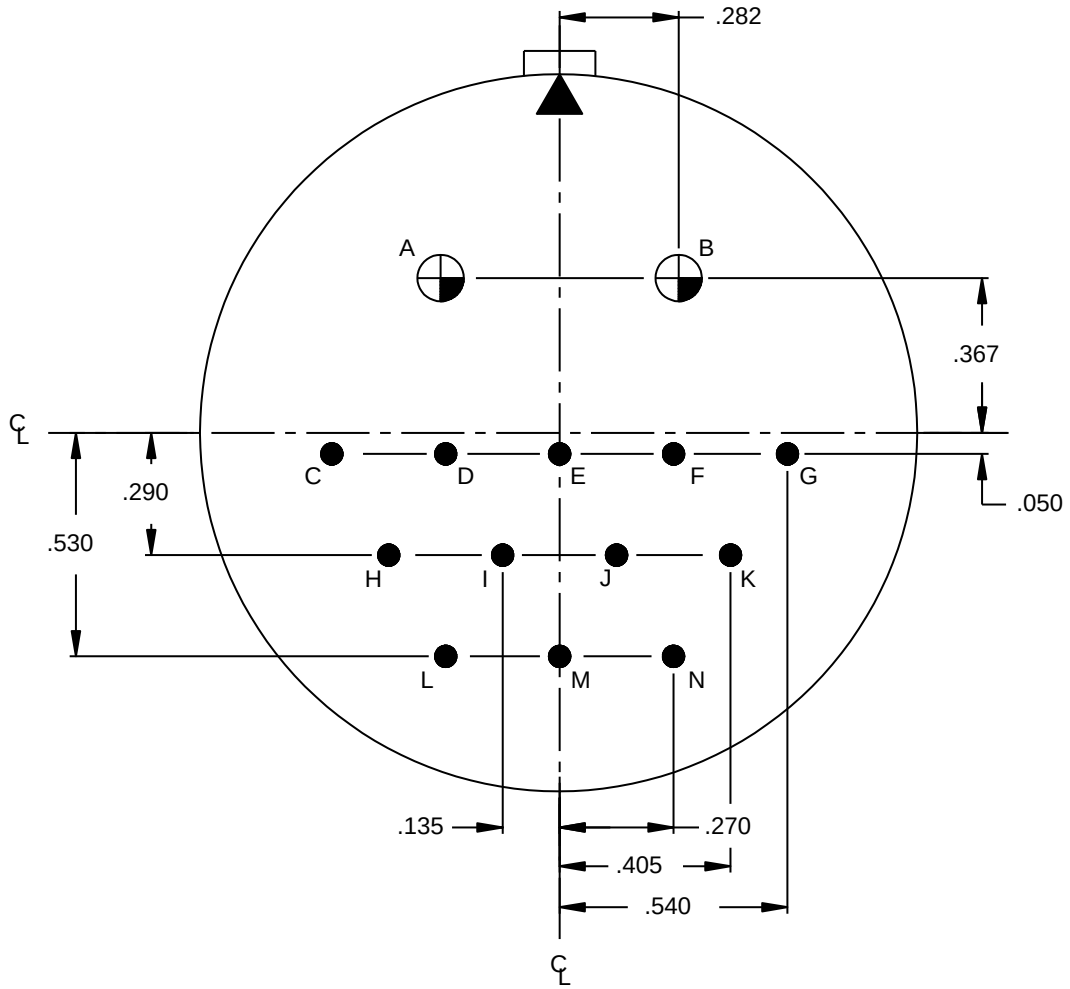

32-9

Contacts (Insert arrangement 32-9)		
Contact position (ID)	Contact location	
	X-axis (mm)	Y-axis (mm)
A	-.282 (7.16)	+.367 (9.32)
B	+.282 (7.16)	+.367 (9.32)
C	-.540 (13.72)	-.050 (1.27)
D	-.270 (6.86)	-.050 (1.27)
E	+.000 (0.00)	-.050 (1.27)
F	+.270 (6.86)	-.050 (1.27)
G	+.540 (13.72)	-.050 (1.27)

Contacts (Insert arrangement 32-9)		
Contact position (ID)	Contact location	
	X-axis (mm)	Y-axis (mm)
H	-.405 (10.29)	-.290 (7.37)
I	-.135 (3.43)	-.290 (7.37)
J	+.135 (3.43)	-.290 (7.37)
K	+.405 (10.29)	-.290 (7.37)
L	-.270 (6.86)	-.530 (13.46)
M	+.000 (0.00)	-.530 (13.46)
N	+.270 (6.86)	-.530 (13.46)

FIGURE 11. Insert arrangement, electrical connector, shell size 32, MIL-DTL-22992, classes C, J and R, MIL-DTL-83723, series II, and SAE-AS50151 and SAE-AS95234 – Continued.

Insert arrangement 32-9						
Shell size	Arrangement number	Number of contacts	Size contacts	Service rating	Contact location	Supersedes
32	-9	12	16	D	All others	MS33689-9
		2	4		A,B	

Alternate insert positions			
A degrees (A°)			
W	X	Y	Z
80	110	250	280

FIGURE 11. Insert arrangement, electrical connector, shell size 32, MIL-DTL-22992, classes C, J and R, MIL-DTL-83723, series II, and SAE-AS50151 and SAE-AS95234 – Continued.

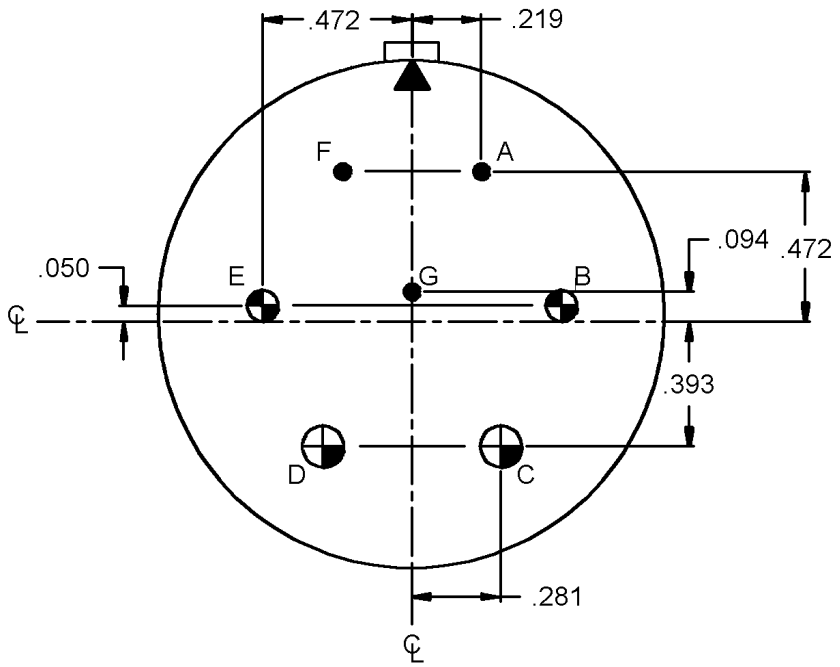

32-10

(Inactive for New Design after 17 Dec 1958 for SAE-AS50151 and MIL-DTL-83723 series II. Active for new design for SAE-AS95234.)

(Not applicable to MIL-DTL-22992.)

Contacts (Insert arrangement 32-10)		
Contact position identification (ID)	Contact location	
	X-axis (mm)	Y-axis (mm)
A	+.219 (5.56)	+.472 (11.99)
B	+.472 (11.99)	+.050 (1.27)
C	+.281 (7.14)	-.393 (9.98)
D	-.281 (7.14)	-.393 (9.98)
E	-.472 (11.99)	+.050 (1.27)
F	-.219 (5.56)	+.472 (11.99)
G	+.000 (0.00)	+.094 (2.39)

Shell size	Arrangement number	Number of contacts	Size contacts	Service rating	Contact location	Supersedes
32	-10	2	16	E	A,F	MS33689-10
		1	16	B	G	
		2	8	D	B,E	
		2	4	A	C,D	

Alternate insert positions			
A degrees (A°)			
W	X	Y	Z
80	110	250	280

FIGURE 11. Insert arrangement, electrical connector, shell size 32, MIL-DTL-22992, classes C, J and R, MIL-DTL-83723, series II, and SAE-AS50151 and SAE-AS95234 – Continued.

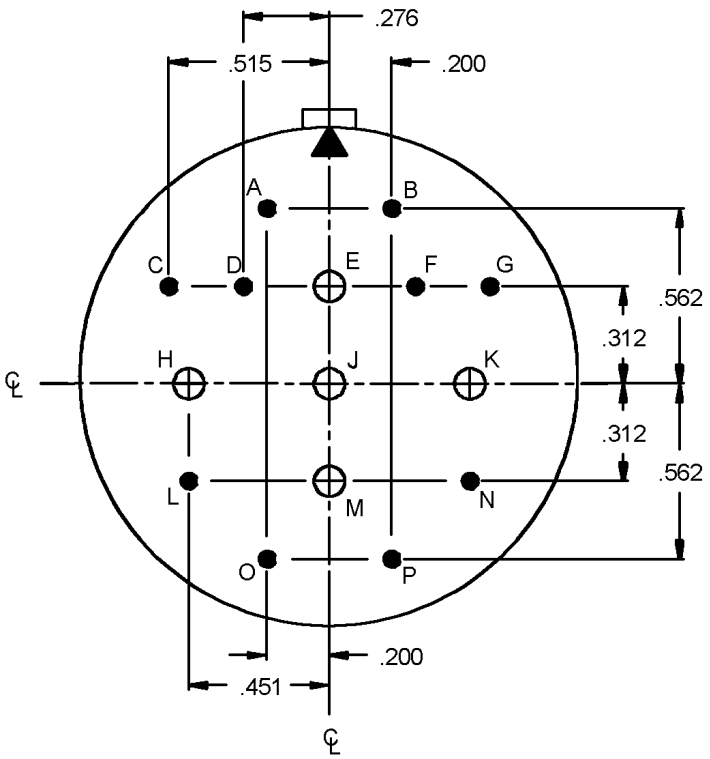

32-12

(Inactive for New Design after 13 May 1954 for SAE-AS50151 and MIL-DTL-83723 series II. Active for new design for SAE-AS95234.)

(Not applicable to MIL-DTL-22992.)

Contacts (Insert arrangement 32-12)		
Contact position identification (ID)	Contact location	
	X-axis (mm)	Y-axis (mm)
A	-.200 (5.08)	+.562 (14.27)
B	+.200 (5.08)	+.562 (14.27)
C	-.515 (13.08)	+.312 (7.92)
D	-.276 (7.01)	+.312 (7.92)
E	+.000 (0.00)	+.312 (7.92)
F	+.276 (7.01)	+.312 (7.92)
G	+.515 (13.08)	+.312 (7.92)
H	-.451 (11.46)	+.000 (0.00)
J	+.000 (0.00)	+.000 (0.00)
K	+.451 (11.46)	+.000 (0.00)
L	-.451 (11.46)	-.312 (7.92)
M	+.000 (0.00)	-.312 (7.92)
N	+.451 (11.46)	-.312 (7.92)
O	-.200 (5.08)	-.562 (14.27)
P	+.200 (5.08)	-.562 (14.27)

FIGURE 11. Insert arrangement, electrical connector, shell size 32, MIL-DTL-22992, classes C, J and R, MIL-DTL-83723, series II, and SAE-AS50151 and SAE-AS95234 – Continued.

Insert arrangement 32-12						
Shell size	Arrangement number	Number of contacts	Size contacts	Service rating	Contact location	Supersedes
32	-12	1	12	A	E	MS33689-12
		4	12	D	H,J,K,M	
		4	16	A	C,D,F,G	
		6	16	D	All others	

Alternate insert positions			
A degrees (A°)			
W	X	Y	Z
80	110	250	280

FIGURE 11. Insert arrangement, electrical connector, shell size 32, MIL-DTL-22992, classes C, J and R, MIL-DTL-83723, series II, and SAE-AS50151 and SAE-AS95234 – Continued.

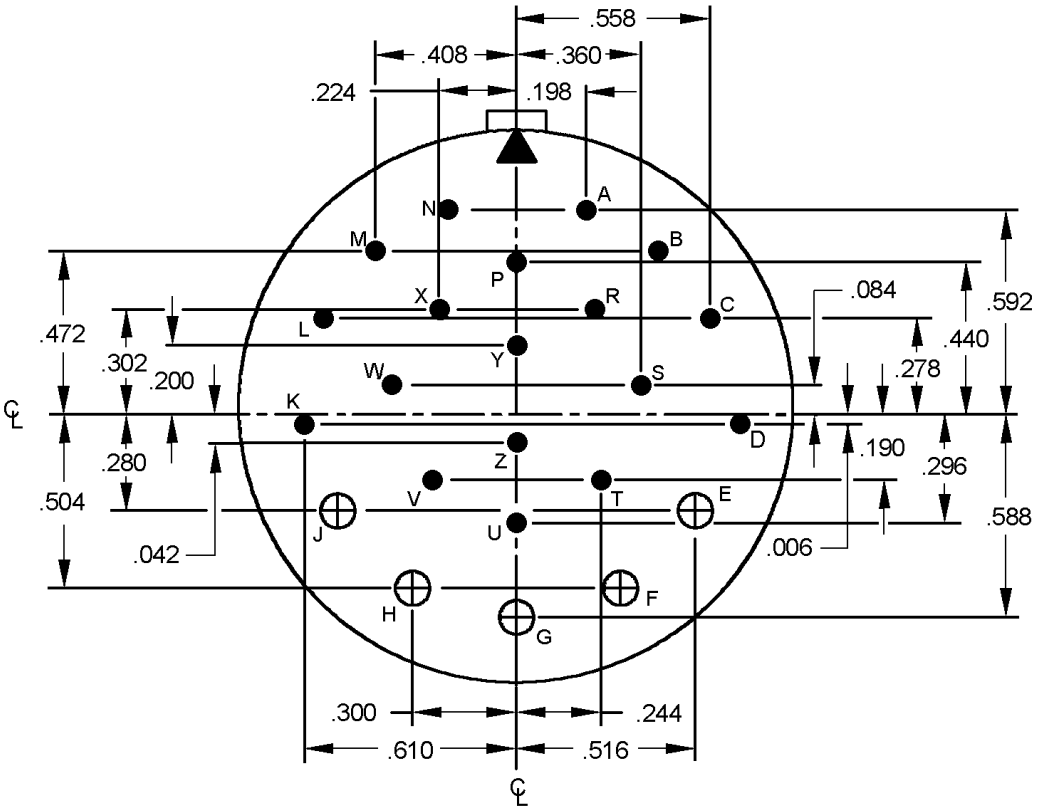

32-13

Contacts (Insert arrangement 32-13)		
Contact position (ID)	Contact location	
	X-axis (mm)	Y-axis (mm)
A	+.198 (5.03)	+.592 (15.04)
B	+.408 (10.36)	+.472 (11.99)
C	+.558 (14.17)	+.278 (7.06)
D	+.610 (15.49)	-.006 (0.15)
E	+.516 (13.11)	-.280 (7.11)
F	+.300 (7.62)	-.504 (12.80)
G	+.000 (0.00)	-.588 (14.94)
H	-.300 (7.62)	-.504 (12.80)
J	-.516 (13.11)	-.280 (7.11)
K	-.610 (15.49)	-.006 (0.15)
L	-.558 (14.17)	+.278 (7.06)
M	-.408 (10.36)	+.472 (11.99)

Contacts (Insert arrangement 32-13)		
Contact position (ID)	Contact location	
	X-axis (mm)	Y-axis (mm)
N	-.198 (5.03)	+.592 (15.04)
P	+.000 (0.00)	+.440 (11.18)
R	+.224 (6.20)	+.302 (7.67)
S	+.360 (9.14)	+.084 (2.13)
T	+.244 (6.20)	-.190 (4.83)
U	+.000 (0.00)	-.296 (7.52)
V	-.244 (6.20)	-.190 (4.83)
W	-.360 (9.14)	+.084 (2.13)
X	-.224 (6.20)	+.302 (7.67)
Y	+.000 (0.00)	+.200 (5.08)
Z	+.000 (0.00)	-.042 (1.07)
---	---	---

FIGURE 11. Insert arrangement, electrical connector, shell size 32, MIL-DTL-22992, classes C, J and R, MIL-DTL-83723, series II, and SAE-AS50151 and SAE-AS95234 – Continued.

Insert arrangement 32-13						
Shell size	Arrangement number	Number of contacts	Size contacts	Service rating	Contact location	Supersedes
32	-13	18	16	D	All others	MS33689-13
		5	12		E,F,G,H,J	

Alternate insert positions			
A degrees (A°)			
W	X	Y	Z
80	110	250	280

FIGURE 11. Insert arrangement, electrical connector, shell size 32, MIL-DTL-22992, classes C, J and R, MIL-DTL-83723, series II, and SAE-AS50151 and SAE-AS95234 – Continued.

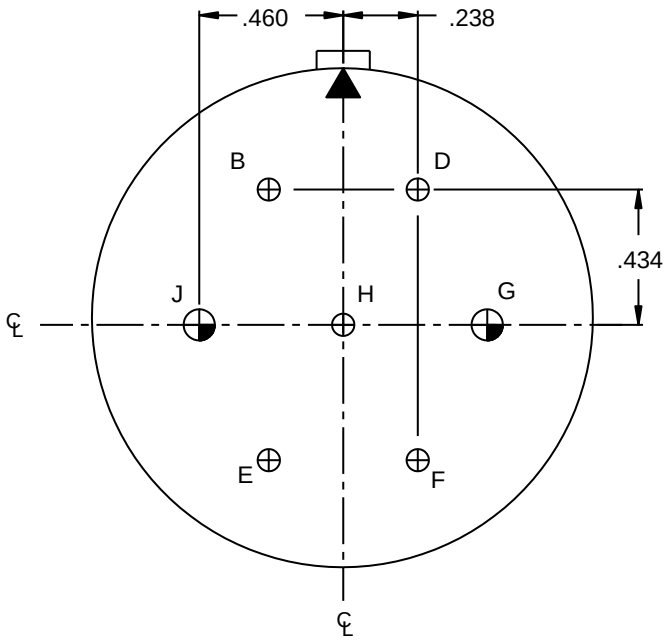

32-14

(Inactive for New Design after 17 Dec 1958 for SAE-AS50151 and MIL-DTL-83723 series II. Active for new design for SAE-AS95234.)

(Not applicable to MIL-DTL-22992.)

Contacts (Insert arrangement 32-14)		
Contact position identification (ID)	Contact location	
	X-axis (mm)	Y-axis (mm)
B	-.238 (6.05)	+.434 (11.02)
D	+.238 (6.05)	+.434 (11.02)
G	+.460 (11.68)	+.000 (0.00)
H	+.000 (0.00)	+.000 (0.00)
J	-.460 (11.68)	+.000 (0.00)
F	+.238 (6.05)	-.434 (11.02)
E	-.238 (6.05)	-.434 (11.02)

Shell size	Arrangement number	Number of contacts	Size contacts	Service rating	Contact location	Supersedes
32	-14	5	12	D	B,D,H,F,Z	MS33689-14
		2	4		G,J	

Alternate insert positions			
A degrees (A°)			
W	X	Y	Z
35	110	250	325

FIGURE 11. Insert arrangement, electrical connector, shell size 32, MIL-DTL-22992, classes C, J and R, MIL-DTL-83723, series II, and SAE-AS50151 and SAE-AS95234 – Continued.

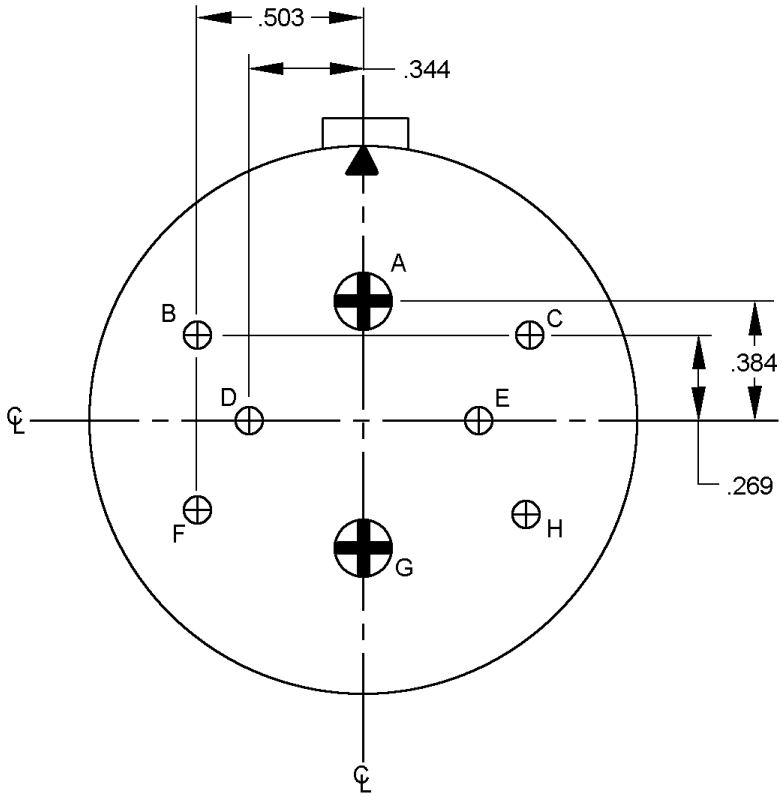

Contacts (Insert arrangement 32-15)		
Contact position identification (ID)	Contact location	
	X-axis (mm)	Y-axis (mm)
A	+.000 (0.00)	+.384 (9.75)
B	-.503 (12.78)	+.269 (6.83)
C	+.503 (12.78)	+.269 (6.83)
D	-.344 (8.74)	+.000 (0.00)
E	+.344 (8.74)	+.000 (0.00)
F	-.503 (12.78)	-.269 (6.83)
G	+.000 (0.00)	-.384 (9.75)
H	+.503 (12.78)	-.269 (6.83)

Shell size	Arrangement number	Number of contacts	Size contacts	Service rating	Contact location	Supersedes
32	-15	6	12	D	B,C,D,E,F,H	MS33689-15
		2	0		A,G	

Alternate insert positions			
A degrees (A°)			
W	X	Y	Z
35	110	250	280

FIGURE 11. Insert arrangement, electrical connector, shell size 32, MIL-DTL-22992, classes C, J and R, MIL-DTL-83723, series II, and SAE-AS50151 and SAE-AS95234 – Continued.

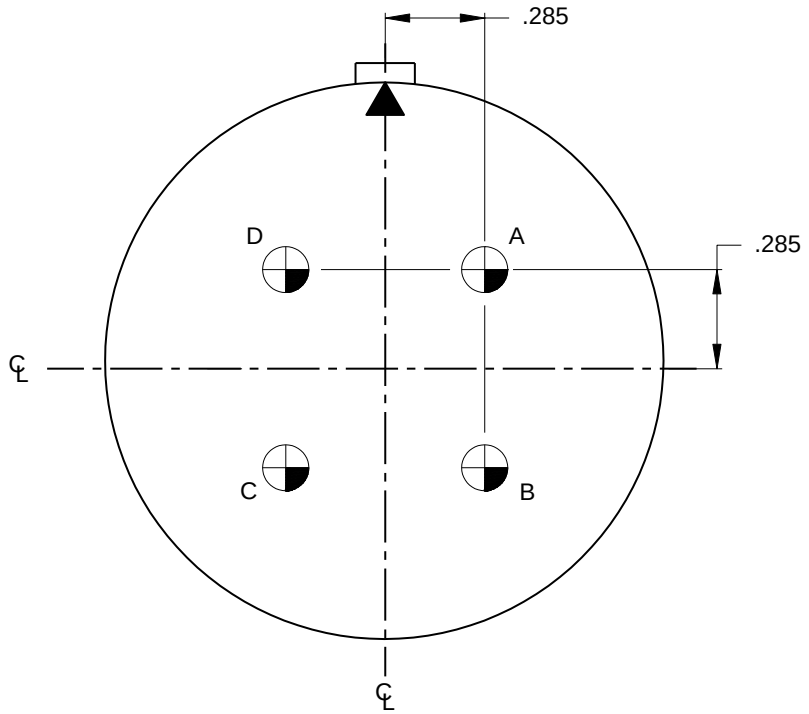

32-17

Contacts (Insert arrangement 32-17)		
Contact position identification (ID)	Contact location	
	X-axis (mm)	Y-axis (mm)
A	+.285 (7.24)	+.285 (7.24)
B	+.285 (7.24)	-.285 (7.24)
C	-.285 (7.24)	-.285 (7.24)
D	-.285 (7.24)	+.285 (7.24)

Shell size	Arrangement number	Number of contacts	Size contacts	Service rating	Contact location	Supersedes
32	-17	2	4	D	All	MS33689-17

Alternate insert positions			
A degrees (A°)			
W	X	Y	Z
45	110	250	---

FIGURE 11. Insert arrangement, electrical connector, shell size 32, MIL-DTL-22992, classes C, J and R, MIL-DTL-83723, series II, and SAE-AS50151 and SAE-AS95234 – Continued.

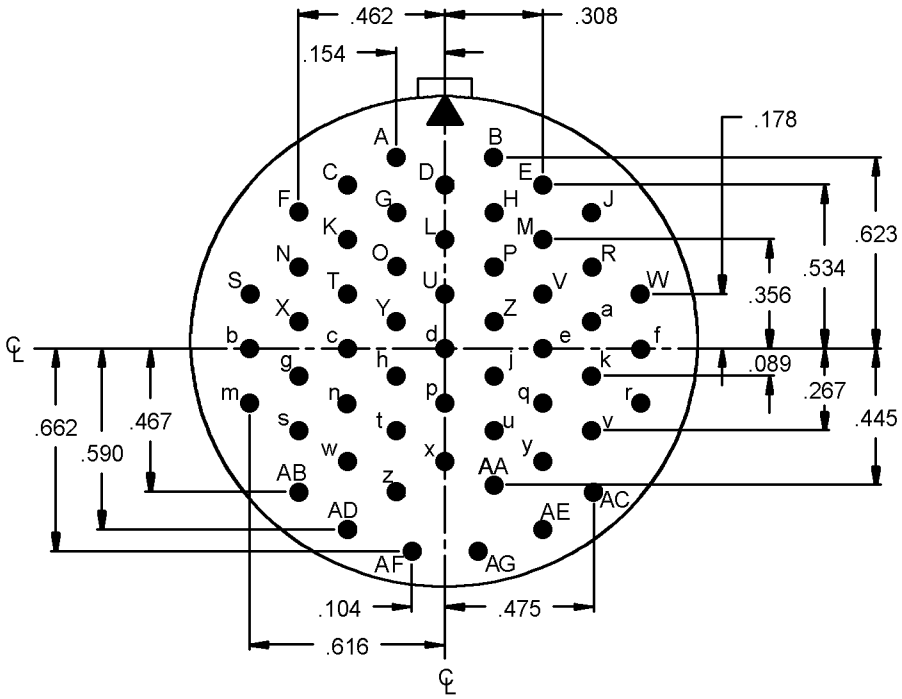

32-22

(Not applicable to MIL-DTL-22992.)

Contacts (Insert arrangement 32-22)		
Contact position identification (ID)	Contact location	
	X-axis (mm)	Y-axis (mm)
A	-.154 (3.91)	+.623 (15.82)
B	+.154 (3.91)	+.623 (15.82)
C	-.308 (7.82)	+.534 (13.56)
D	+.000 (0.00)	+.534 (13.56)
E	+.308 (7.82)	+.534 (13.56)
F	-.462 (11.73)	+.467 (11.86)
G	-.154 (3.91)	+.445 (11.30)
H	+.154 (3.91)	+.445 (11.30)
J	+.462 (11.73)	+.467 (11.86)
K	-.308 (7.82)	+.356 (9.04)
L	+.000 (0.00)	+.356 (9.04)
M	+.308 (7.82)	+.356 (9.04)
N	-.462 (11.73)	+.267 (6.78)
O	-.154 (3.91)	+.267 (6.78)
P	+.154 (3.91)	+.267 (6.78)
R	+.462 (11.73)	+.267 (6.78)
S	-.616 (15.65)	+.178 (4.52)
T	-.308 (7.82)	+.178 (4.52)
U	+.000 (0.00)	+.178 (4.52)

FIGURE 11. Insert arrangement, electrical connector, shell size 32, MIL-DTL-22992, classes C, J and R, MIL-DTL-83723, series II, and SAE-AS50151 and SAE-AS95234 – Continued.

Contacts (Insert arrangement 32-22)		
Contact position identification (ID)	Contact location	
	X-axis (mm)	Y-axis (mm)
V	+.308 (7.82)	+.178 (4.52)
W	+.616 (15.65)	+.178 (4.52)
X	-.462 (11.73)	+.089 (2.26)
Y	-.154 (3.91)	+.089 (2.26)
Z	+.154 (3.91)	+.089 (2.26)
a	+.462 (11.73)	+.089 (2.26)
b	-.616 (15.65)	+.000 (0.00)
c	-.308 (7.82)	+.000 (0.00)
d	+.000 (0.00)	+.000 (0.00)
e	+.308 (7.82)	+.000 (0.00)
f	+.616 (15.65)	+.000 (0.00)
g	-.462 (11.73)	-.089 (2.26)
h	-.154 (3.91)	-.089 (2.26)
j	+.154 (3.91)	-.089 (2.26)
k	+.462 (11.73)	-.089 (2.26)
m	-.616 (15.65)	-.178 (4.52)
n	-.308 (7.82)	-.178 (4.52)
p	+.000 (0.00)	-.178 (4.52)
q	+.308 (7.82)	-.178 (4.52)
r	+.616 (15.65)	-.178 (4.52)
s	-.462 (11.73)	-.267 (6.78)
t	-.154 (3.91)	-.267 (6.78)
u	+.154 (3.91)	-.267 (6.78)
v	+.462 (11.73)	-.267 (6.78)
w	-.308 (7.82)	-.356 (9.04)
x	+.000 (0.00)	-.356 (9.04)
y	+.308 (7.82)	-.356 (9.04)
z	-.154 (3.91)	-.445 (11.30)
AA	+.154 (3.91)	-.445 (11.30)
AB	-.475 (12.07)	-.467 (11.86)
AC	+.475 (12.07)	-.467 (11.86)
AD	-.308 (7.82)	-.590 (14.99)
AE	+.308 (7.82)	-.590 (14.99)
AF	+.104 (2.64)	-.662 (16.81)
AG	-.104 (2.64)	-.662 (16.91)

Shell size	Arrangement number	Number of contacts	Size contacts	Service rating	Contact location	Supersedes
32	-22	54	16	A	All	MS33689-22

Alternate insert positions					
A degrees (A°)					
U	V	W	X	Y	Z
100	260	80	110	250	280

FIGURE 11. Insert arrangement, electrical connector, shell size 32, MIL-DTL-22992, classes C, J and R, MIL-DTL-83723, series II, and SAE-AS50151 and SAE-AS95234 – Continued.

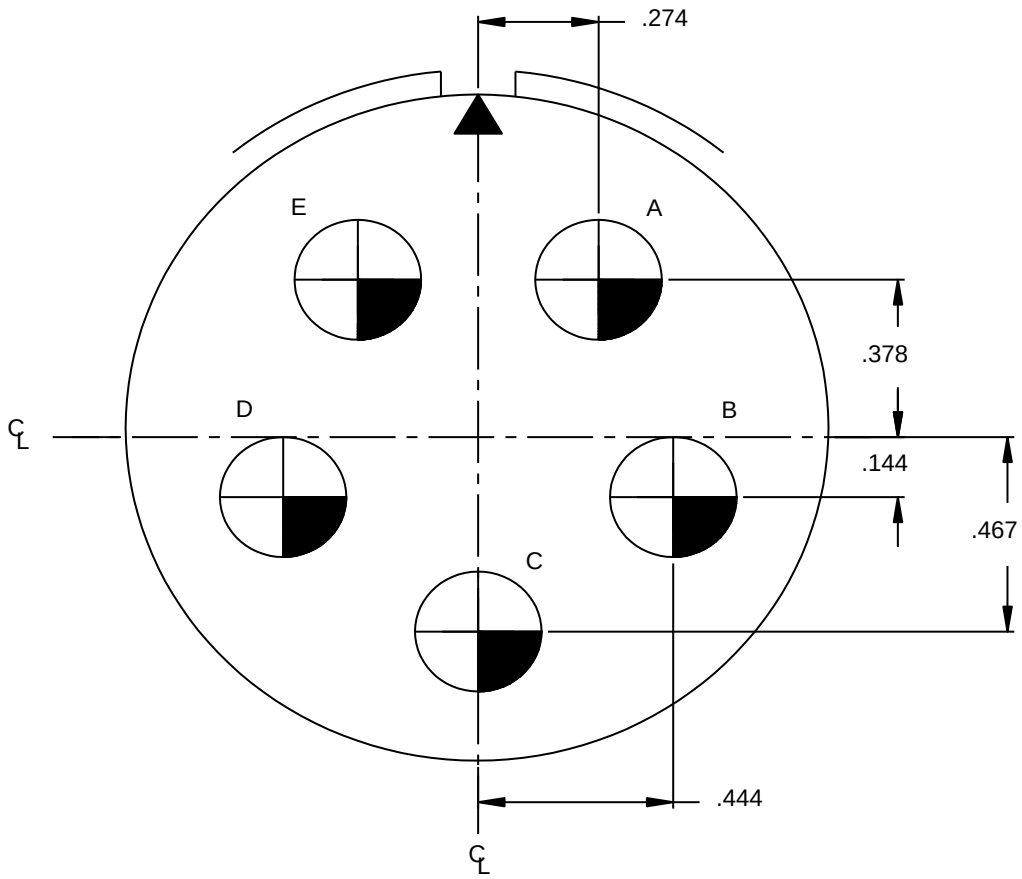

32-63

(Not applicable to MIL-DTL-22992 or MIL-DTL-83723.)

Contacts (Insert arrangement 32-63)		
Contact position identification (ID)	Contact location	
	X-axis (mm)	Y-axis (mm)
A	+.274 (6.96)	+.378 (14.94)
B	+.444 (11.28)	-.144 (3.66)
C	+.000 (0.00)	-.467 (11.86)
D	-.444 (11.28)	-.144 (3.66)
E	-.274 (6.96)	+.378 (14.94)

Shell size	Arrangement number	Number of contacts	Size contacts	Service rating	Contact location	Supersedes
32	-63	5	4	D	All	MS33689-63

Note: This insert arrangement has no alternate insert positions.

FIGURE 11. Insert arrangement, electrical connector, shell size 32, MIL-DTL-22992, classes C, J and R, MIL-DTL-83723, series II, and SAE-AS50151 and SAE-AS95234 – Continued.

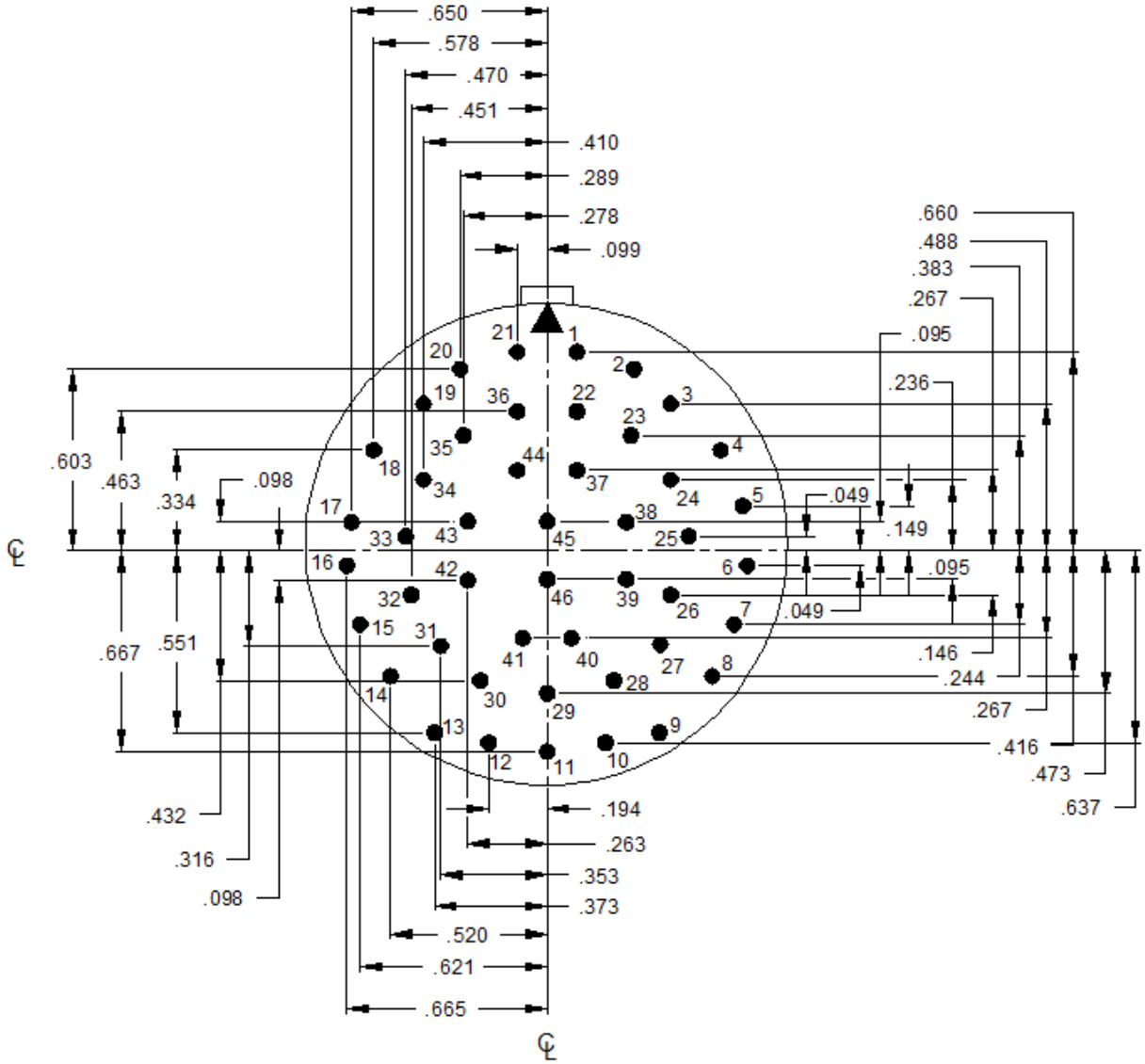

32-73

(Not applicable for design of Air Force Airborne Equipment for SAE-AS50151 and MIL-DTL-83723 series II. Active for new design for SAE-AS95234.)

Contacts (Insert arrangement 32-73)		
Contact position identification (ID)	Contact location	
	X-axis (mm)	Y-axis (mm)
1	+.099 (2.51)	+.660 (16.76)
2	+.289 (7.34)	+.603 (15.32)
3	+.451 (11.46)	+.488 (12.40)
4	+.578 (14.68)	+.334 (8.48)
5	+.650 (16.51)	+.149 (3.78)

FIGURE 11. Insert arrangement, electrical connector, shell size 32, MIL-DTL-22992, classes C, J and R, MIL-DTL-83723, series II, and SAE-AS50151 and SAE-AS95234 – Continued.

Contacts (Insert arrangement 32-73)		
Contact position identification (ID)	Contact location	
	X-axis (mm)	Y-axis (mm)
6	+.665 (16.89)	-.049 (1.24)
7	+.621 (15.77)	-.244 (6.20)
8	+.520 (13.21)	-.416 (10.57)
9	+.373 (9.47)	-.551 (14.00)
10	+.194 (4.93)	-.637 (16.18)
11	+.000 (0.00)	-.667 (16.94)
12	-.194 (4.93)	-.637 (16.18)
13	-.373 (9.47)	-.551 (14.00)
14	-.520 (13.21)	-.416 (10.57)
15	-.621 (15.77)	-.244 (6.20)
16	-.665 (16.89)	-.049 (1.24)
17	-.650 (16.51)	+.149 (3.78)
18	-.578 (14.68)	+.334 (8.48)
19	-.451 (11.46)	+.488 (12.40)
20	-.289 (7.34)	+.603 (15.32)
21	-.099 (2.51)	+.660 (16.76)
22	+.099 (2.51)	+.463 (11.76)
23	+.278 (7.06)	+.383 (9.73)
24	+.410 (10.41)	+.236 (5.99)
25	+.470 (11.94)	+.049 (1.24)
26	+.451 (11.46)	-.146 (3.71)
27	+.353 (8.97)	-.316 (8.03)
28	+.194 (4.93)	-.432 (10.97)
29	+.000 (0.00)	-.473 (12.01)
30	-.194 (4.93)	-.432 (10.97)
31	-.353 (8.97)	-.316 (8.03)
32	-.451 (11.46)	-.146 (3.71)
33	-.470 (11.94)	+.049 (1.24)
34	-.410 (10.41)	+.236 (5.99)
35	-.278 (7.06)	+.383 (9.73)
36	-.099 (2.51)	+.463 (11.76)
37	+.099 (2.51)	+.267 (6.78)
38	+.263 (6.68)	+.095 (2.41)
39	+.263 (6.68)	-.095 (2.41)
40	+.099 (2.51)	-.267 (6.78)
41	-.099 (2.51)	-.267 (6.78)
42	-.263 (6.68)	-.098 (2.49)
43	-.263 (6.68)	+.098 (2.49)
44	-.099 (2.51)	+.267 (6.78)
45	+.000 (0.00)	+.095 (2.41)
46	+.000 (0.00)	-.095 (2.41)

FIGURE 11. Insert arrangement, electrical connector, shell size 32, MIL-DTL-22992, classes C, J and R, MIL-DTL-83723, series II, and SAE-AS50151 and SAE-AS95234 – Continued.

Insert arrangement 32-73						
Shell size	Arrangement number	Number of contacts	Size contacts	Service rating	Contact location	Supersedes
32	-73	46	16	A	All	MS33689-73

Alternate insert positions			
A degrees (A°)			
W	X	Y	Z
36	---	---	---

FIGURE 11. Insert arrangement, electrical connector, shell size 32, MIL-DTL-22992, classes C, J and R, MIL-DTL-83723, series II, and SAE-AS50151 and SAE-AS95234 – Continued.

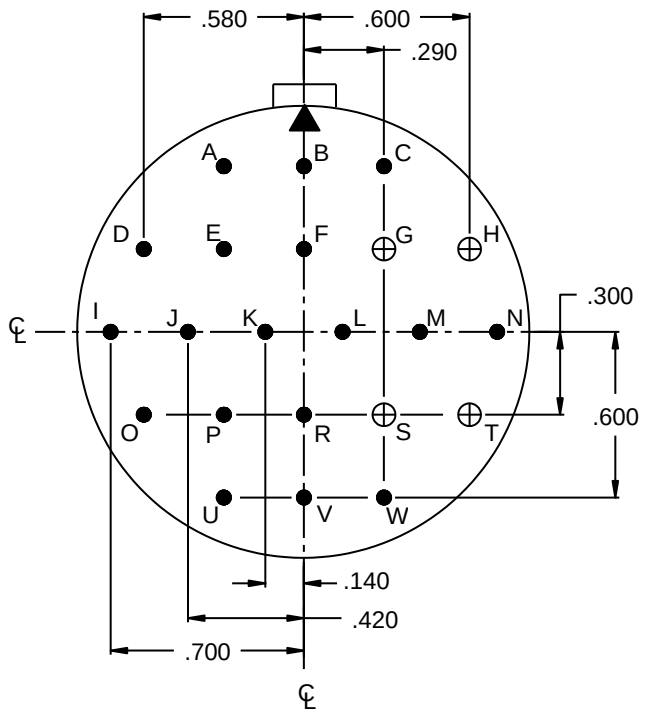

36-1

(Not applicable to MIL-DTL-22992.)

(Inactive for New Design after 13 May 1954 for SAE-AS50151 and MIL-DTL-83723 series II. Active for new design for SAE-AS95234.)

Contacts (Insert arrangement 36-1)		
Contact position (ID)	Contact location	
	X-axis (mm)	Y-axis (mm)
A	-.290 (7.37)	+.600 (15.24)
B	+.000 (0.00)	+.600 (15.24)
C	+.290 (7.37)	+.600 (15.24)
D	-.580 (14.73)	+.300 (7.62)
E	-.290 (7.37)	+.300 (7.62)
F	+.000 (0.00)	+.300 (7.62)
G	+.290 (7.37)	+.300 (7.62)
H	+.600 (15.24)	+.300 (7.62)
I	-.700 (17.78)	+.000 (0.00)
J	-.420 (10.67)	+.000 (0.00)
K	-.140 (3.56)	+.000 (0.00)

Contacts (Insert arrangement 36-1)		
Contact position (ID)	Contact location	
	X-axis (mm)	Y-axis (mm)
L	+.140 (3.56)	+.000 (0.00)
M	+.420 (10.67)	+.000 (0.00)
N	+.700 (17.78)	+.000 (0.00)
O	-.580 (14.73)	-.300 (7.62)
P	-.290 (7.37)	-.300 (7.62)
R	+.000 (0.00)	-.300 (7.62)
S	+.290 (7.37)	-.300 (7.62)
T	+.600 (15.24)	-.300 (7.62)
U	-.290 (7.37)	-.600 (15.24)
V	+.000 (0.00)	-.600 (15.24)
W	+.290 (7.37)	-.600 (15.24)

FIGURE 12. Insert arrangement, electrical connector, shell size 36, MIL-DTL-22992, classes C, J and R, MIL-DTL-83723, series II, and SAE-AS50151 and SAE-AS95234.

Insert arrangement 36-1						
Shell size	Arrangement number	Number of contacts	Size contacts	Service rating	Contact location	Supersedes
36	-1	18	16	D	All others	MS33690-1
		4	12	D	G,H,S,T	

Alternate insert positions			
A degrees (A°)			
W	X	Y	Z
80	110	250	280

FIGURE 12. Insert arrangement, electrical connector, shell size 36, MIL-DTL-22992, classes C, J and R, MIL-DTL-83723, series II, and SAE-AS50151 and SAE-AS95234 – Continued.

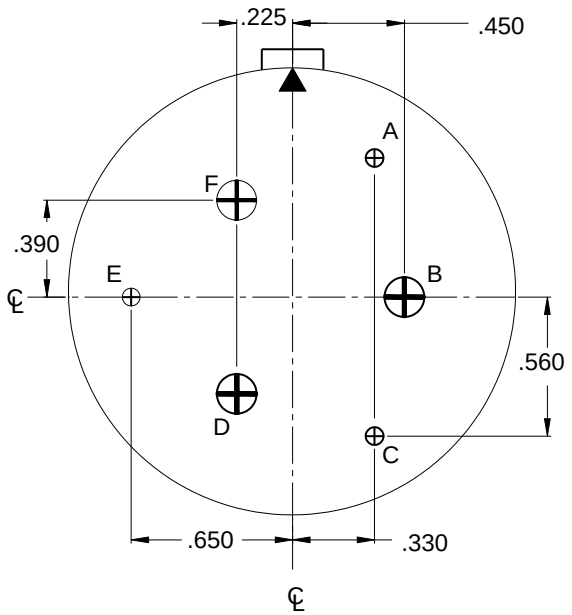

36-3

Contacts (Insert arrangement 36-3)		
Contact position identification (ID)	Contact location	
	X-axis (mm)	Y-axis (mm)
A	+.330 (8.38)	+.560 (14.22)
B	+.450 (11.43)	+.000 (0.00)
C	+.330 (8.38)	-.560 (14.22)
D	-.225 (5.72)	-.390 (9.91)
E	-.650 (16.76)	+.000 (0.00)
F	-.225 (5.72)	+.390 (9.91)

Shell size	Arrangement number	Number of contacts	Size contacts	Service rating	Contact location	Supersedes
36	-3	3	12	D	A,C,E	MS33690-3
		3	0	D	B,D,F	

Alternate insert positions			
A degrees (A°)			
W	X	Y	Z
70	145	215	290

FIGURE 12. Insert arrangement, electrical connector, shell size 36, MIL-DTL-22992, classes C, J and R, MIL-DTL-83723, series II, and SAE-AS50151 and SAE-AS95234 - Continued.

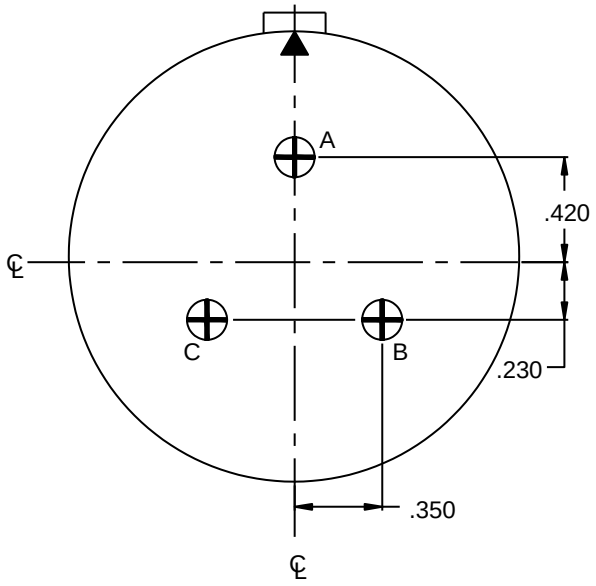

36-4

(Inactive for New Design after 13 May 1954 for SAE-AS50151 and MIL-DTL-83723 series II. Active for new design for SAE-AS95234.)

(Not applicable to MIL-DTL-22992.)

Contacts (Insert arrangement 36-4)		
Contact position identification (ID)	Contact location	
	X-axis (mm)	Y-axis (mm)
A	+.000 (0.00)	+.420 (10.67)
B	+.350 (8.89)	-.230 (5.84)
C	-.350 (8.89)	-.230 (5.84)

Shell size	Arrangement number	Number of contacts	Size contacts	Service rating	Contact location	Supersedes
36	-4	1	0	D	A	MS33690-4
		2		A	B,C	

Alternate insert positions			
A degrees (A°)			
W	X	Y	Z
70	145	215	290

FIGURE 12. Insert arrangement, electrical connector, shell size 36, MIL-DTL-22992, classes C, J and R, MIL-DTL-83723, series II, and SAE-AS50151 and SAE-AS95234 - Continued.

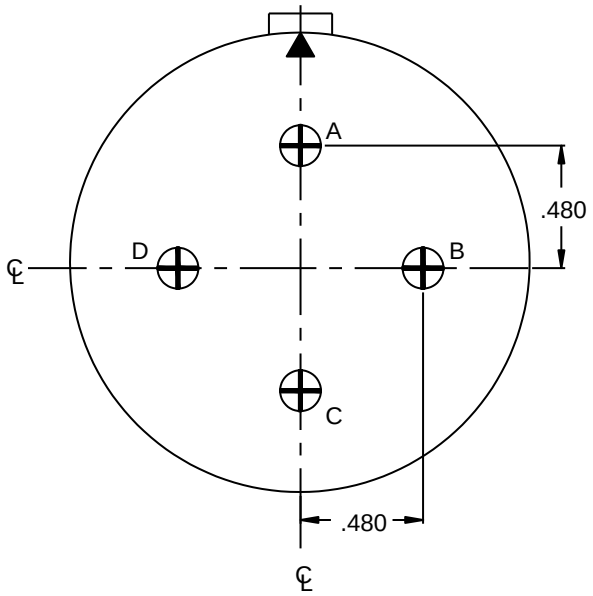

36-5

Contacts (Insert arrangement 36-5)		
Contact position identification (ID)	Contact location	
	X-axis (mm)	Y-axis (mm)
A	+.000 (0.00)	+.480 (12.19)
B	+.480 (12.19)	+.000 (0.00)
C	+.000 (0.00)	-.480 (12.19)
D	-.480 (12.19)	+.000 (0.00)

Shell size	Arrangement number	Number of contacts	Size contacts	Service rating	Contact location	Supersedes
36	-5	4	0	A	All	MS33690-5

Alternate insert positions			
A degrees (A°)			
W	X	Y	Z
---	120	240	---

FIGURE 12. Insert arrangement, electrical connector, shell size 36, MIL-DTL-22992, classes C, J and R, MIL-DTL-83723, series II, and SAE-AS50151 and SAE-AS95234 - Continued.

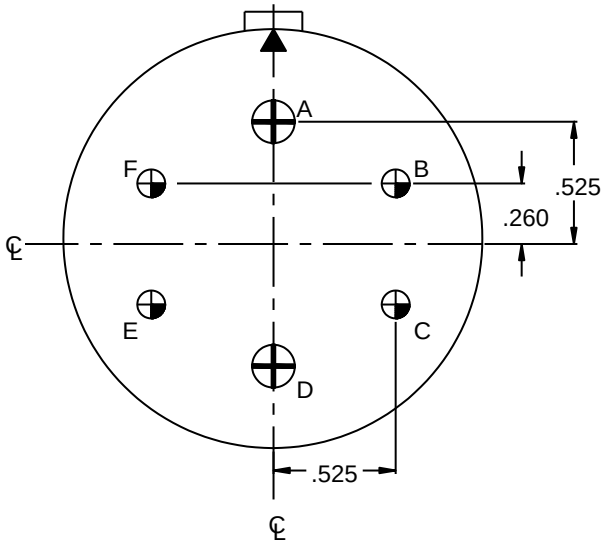

36-6

Contacts (Insert arrangement 36-6)		
Contact position identification (ID)	Contact location	
	X-axis (mm)	Y-axis (mm)
A	+.000 (0.00)	+.525 (13.34)
B	+.525 (13.34)	+.260 (6.60)
C	+.525 (13.34)	-.260 (6.60)
D	+.000 (0.00)	-.525 (13.34)
E	-.525 (13.34)	-.260 (6.60)
F	-.525 (13.34)	+.260 (6.60)

Shell size	Arrangement number	Number of contacts	Size contacts	Service rating	Contact location	Supersedes
36	-6	4	4	A	All others	MS33690-6
		2	0		A,D	

Alternate insert positions			
A degrees (A°)			
W	X	Y	Z
35	110	250	325

FIGURE 12. Insert arrangement, electrical connector, shell size 36, MIL-DTL-22992, classes C, J and R, MIL-DTL-83723, series II, and SAE-AS50151 and SAE-AS95234 - Continued.

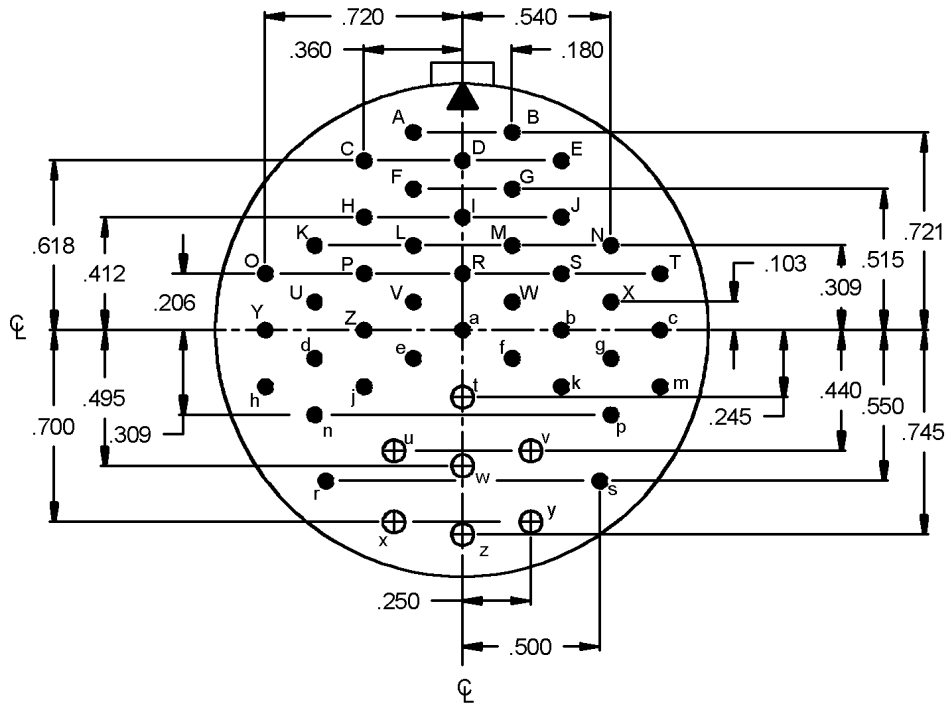

36-7

Contacts (Insert arrangement 36-7)		
Contact position identification (ID)	Contact location	
	X-axis (mm)	Y-axis (mm)
A	-.180 (4.57)	+.721 (18.31)
B	+.180 (4.57)	+.721 (18.31)
C	-.360 (9.14)	+.618 (15.70)
D	+.000 (0.00)	+.618 (15.70)
E	+.360 (9.14)	+.618 (15.70)
F	-.180 (4.57)	+.515 (13.08)
G	+.180 (4.57)	+.515 (13.08)
H	-.360 (9.14)	+.412 (10.46)
I	+.000 (0.00)	+.412 (10.46)
J	+.360 (9.14)	+.412 (10.46)
K	-.540 (13.72)	+.309 (7.85)
L	-.180 (4.57)	+.309 (7.85)
M	+.180 (4.57)	+.309 (7.85)
N	+.540 (13.72)	+.309 (7.85)
O	-.720 (18.29)	+.206 (5.23)
P	-.360 (9.14)	+.206 (5.23)
R	+.000 (0.00)	+.206 (5.23)
S	+.360 (9.14)	+.206 (5.23)
T	+.720 (18.29)	+.206 (5.23)

FIGURE 12. Insert arrangement, electrical connector, shell size 36, MIL-DTL-22992, classes C, J and R, MIL-DTL-83723, series II, and SAE-AS50151 and SAE-AS95234 - Continued.

Contacts (Insert arrangement 36-7)		
Contact position identification (ID)	Contact location	
	X-axis (mm)	Y-axis (mm)
U	-.540 (13.72)	+.103 (2.62)
V	-.180 (4.57)	+.103 (2.62)
W	+.180 (4.57)	+.103 (2.62)
X	+.540 (13.72)	+.103 (2.62)
Y	-.720 (18.29)	+.000 (0.00)
Z	-.360 (9.14)	+.000 (0.00)
a	+.000 (0.00)	+.000 (0.00)
b	+.360 (9.14)	+.000 (0.00)
c	+.720 (18.29)	+.000 (0.00)
d	-.540 (13.72)	-.103 (2.62)
e	-.180 (4.57)	-.103 (2.62)
f	+.180 (4.57)	-.103 (2.62)
g	+.540 (13.72)	-.103 (2.62)
h	-.720 (18.29)	-.206 (5.23)
j	-.360 (9.14)	-.206 (5.23)
k	+.360 (9.14)	-.206 (5.23)
m	+.720 (18.29)	-.206 (5.23)
n	-.540 (13.72)	-.309 (7.85)
p	+.540 (13.72)	-.309 (7.85)
r	-.500 (12.70)	-.550 (13.97)
s	+.500 (12.70)	-.550 (13.97)
t	+.000 (0.00)	-.245 (6.22)
u	-.250 (6.35)	-.440 (11.18)
v	+.250 (6.35)	-.440 (11.18)
w	+.000 (0.00)	-.495 (12.57)
x	-.250 (6.35)	-.700 (17.78)
y	+.250 (6.35)	-.700 (17.78)
z	+.000 (0.00)	-.745 (18.92)

Shell size	Arrangement number	Number of contacts	Size contacts	Service rating	Contact location	Supersedes
36	-7	40	16	A	All others	MS33690-7
		7	12	A	t,u,v,w,x,y,z	

Alternate insert positions			
A degrees (A°)			
W	X	Y	Z
80	110	250	280

FIGURE 12. Insert arrangement, electrical connector, shell size 36, MIL-DTL-22992, classes C, J and R, MIL-DTL-83723, series II, and SAE-AS50151 and SAE-AS95234 - Continued.

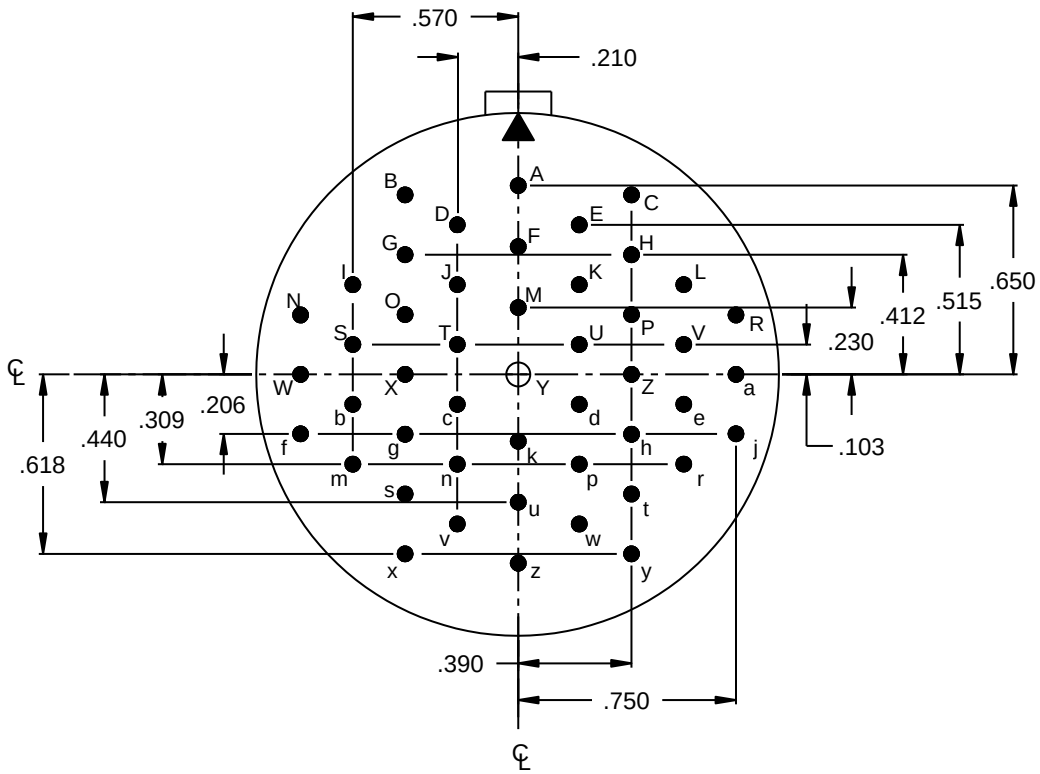

36-8

Contacts (Insert arrangement 36-8)		
Contact position identification (ID)	Contact location	
	X-axis (mm)	Y-axis (mm)
A	+.000 (0.00)	+.650 (16.51)
B	-.390 (9.91)	+.618 (15.70)
C	+.390 (9.91)	+.618 (15.70)
D	-.210 (5.33)	+.515 (13.08)
E	+.210 (5.33)	+.515 (13.08)
F	+.000 (0.00)	+.440 (11.18)
G	-.390 (9.91)	+.412 (10.46)
H	+.390 (9.91)	+.412 (10.46)
I	-.570 (14.48)	+.309 (7.85)
J	-.210 (5.33)	+.309 (7.85)
K	+.210 (5.33)	+.309 (7.85)
L	+.570 (14.48)	+.309 (7.85)
M	+.000 (0.00)	+.230 (5.84)
N	-.750 (19.05)	+.206 (5.23)
O	-.390 (9.91)	+.206 (5.23)
P	+.390 (9.91)	+.206 (5.23)
R	+.750 (19.05)	+.206 (5.23)

FIGURE 12. Insert arrangement, electrical connector, shell size 36, MIL-DTL-22992, classes C, J and R, MIL-DTL-83723, series II, and SAE-AS50151 and SAE-AS95234 - Continued.

Contacts (Insert arrangement 36-8)		
	Contact location	
	X-axis (mm)	Y-axis (mm)
S	-.570 (14.48)	+.103 (2.62)
T	-.210 (5.33)	+.103 (2.62)
U	+.210 (5.33)	+.103 (2.62)
V	+.570 (14.48)	+.103 (2.62)
W	-.750 (19.05)	+.000 (0.00)
X	-.390 (9.91)	+.000 (0.00)
Y	+.000 (0.00)	+.000 (0.00)
Z	+.390 (9.91)	+.000 (0.00)
a	+.750 (19.05)	+.000 (0.00)
b	-.570 (14.48)	-.103 (2.62)
c	-.210 (5.33)	-.103 (2.62)
d	+.210 (5.33)	-.103 (2.62)
e	+.570 (14.48)	-.103 (2.62)
f	-.750 (19.05)	-.206 (5.23)
g	-.390 (9.91)	-.206 (5.23)
h	+.390 (9.91)	-.206 (5.23)
j	+.750 (19.05)	-.206 (5.23)
k	+.000 (0.00)	-.230 (5.84)
m	-.570 (14.48)	-.309 (7.85)
n	-.210 (5.33)	-.309 (7.85)
p	+.210 (5.33)	-.309 (7.85)
r	+.570 (14.48)	-.309 (7.85)
s	-.390 (9.91)	-.412 (10.46)
t	+.390 (9.91)	-.412 (10.46)
u	+.000 (0.00)	-.440 (11.18)
v	-.210 (5.33)	-.515 (13.08)
w	+.210 (5.33)	-.515 (13.08)
x	-.390 (9.91)	-.618 (15.70)
y	+.390 (9.91)	-.618 (15.70)
z	+.000 (0.00)	-.650 (16.51)

Shell size	Arrangement number	Number of contacts	Size contacts	Service rating	Contact location	Supersedes
36	-8	46	16	A	All others	MS33690-8
		1	12	A	Y	

Alternate insert positions			
A degrees (A°)			
W	X	Y	Z
80	110	250	280

FIGURE 12. Insert arrangement, electrical connector, shell size 36, MIL-DTL-22992, classes C, J and R, MIL-DTL-83723, series II, and SAE-AS50151 and SAE-AS95234 - Continued.

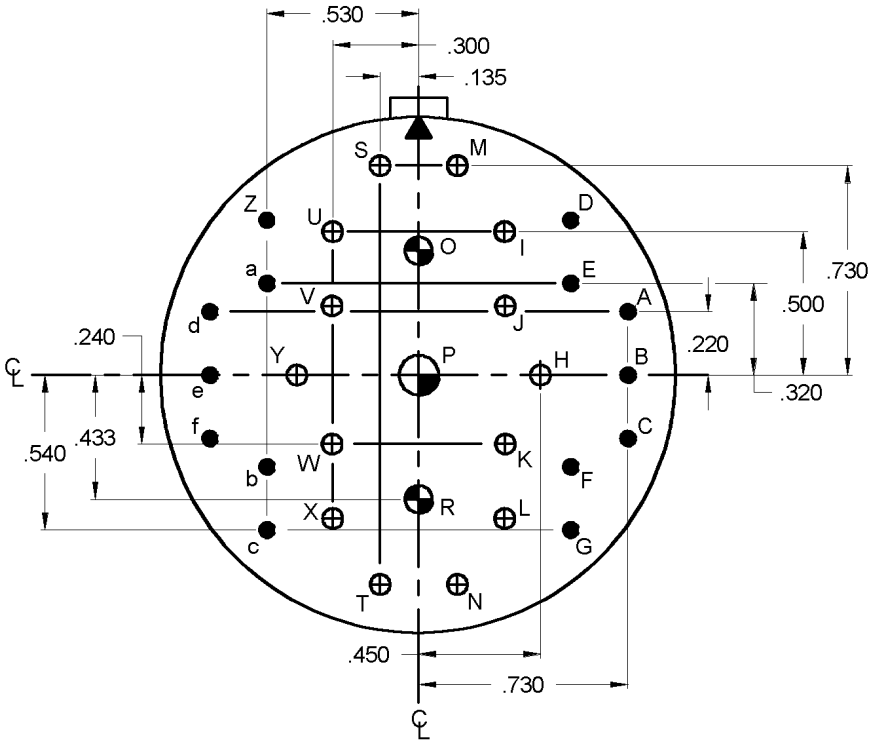

36-9

Contacts (Insert arrangement 36-9)		
Contact position identification (ID)	Contact location	
	X-axis (mm)	Y-axis (mm)
A	+.730 (18.54)	+.220 (5.59)
B	+.730 (18.54)	+.000 (0.00)
C	+.730 (18.54)	-.220 (5.59)
D	+.530 (13.46)	+.540 (13.72)
E	+.530 (13.46)	+.320 (8.13)
F	+.530 (13.46)	-.320 (8.13)
G	+.530 (13.46)	-.540 (13.72)
H	+.450 (11.43)	+.000 (0.00)
I	+.300 (7.62)	+.500 (12.70)
J	+.300 (7.62)	+.240 (6.10)
K	+.300 (7.62)	-.240 (6.10)
L	+.300 (7.62)	-.500 (12.70)
M	+.135 (3.43)	+.730 (18.54)
N	+.135 (3.43)	-.730 (18.54)
O	+.000 (0.00)	+.433 (11.00)
P	+.000 (0.00)	+.000 (0.00)
R	+.000 (0.00)	-.433 (11.00)

FIGURE 12. Insert arrangement, electrical connector, shell size 36, MIL-DTL-22992, classes C, J and R, MIL-DTL-83723, series II, and SAE-AS50151 and SAE-AS95234 - Continued.

Contacts (Insert arrangement 36-9)		
Contact position identification (ID)	Contact location	
	X-axis (mm)	Y-axis (mm)
S	-.135 (3.43)	+.730 (18.54)
T	-.135 (3.43)	-.730 (18.54)
U	-.300 (7.62)	+.500 (12.70)
V	-.300 (7.62)	+.240 (6.10)
W	-.300 (7.62)	-.240 (6.10)
X	-.300 (7.62)	-.500 (12.70)
Y	-.450 (11.43)	+.000 (0.00)
Z	-.530 (13.46)	+.540 (13.72)
a	-.530 (13.46)	+.320 (8.13)
b	-.530 (13.46)	-.320 (8.13)
c	-.530 (13.46)	-.540 (13.72)
d	-.730 (18.54)	+.220 (5.59)
e	-.730 (18.54)	+.000 (0.00)
f	-.730 (18.54)	-.220 (5.59)

Shell size	Arrangement number	Number of contacts	Size contacts	Service rating	Contact location	Supersedes
36	-9	14	16	A	All others	MS33690-9
		14	12	A	H,I,J,K,L,M,N,S,T,U,V,Y,W,X	
		2	8	A	O,R	
		1	4	A	P	

Alternate insert positions			
A degrees (A°)			
W	X	Y	Z
80	125	235	280

FIGURE 12. Insert arrangement, electrical connector, shell size 36, MIL-DTL-22992, classes C, J and R, MIL-DTL-83723, series II, and SAE-AS50151 and SAE-AS95234 - Continued.

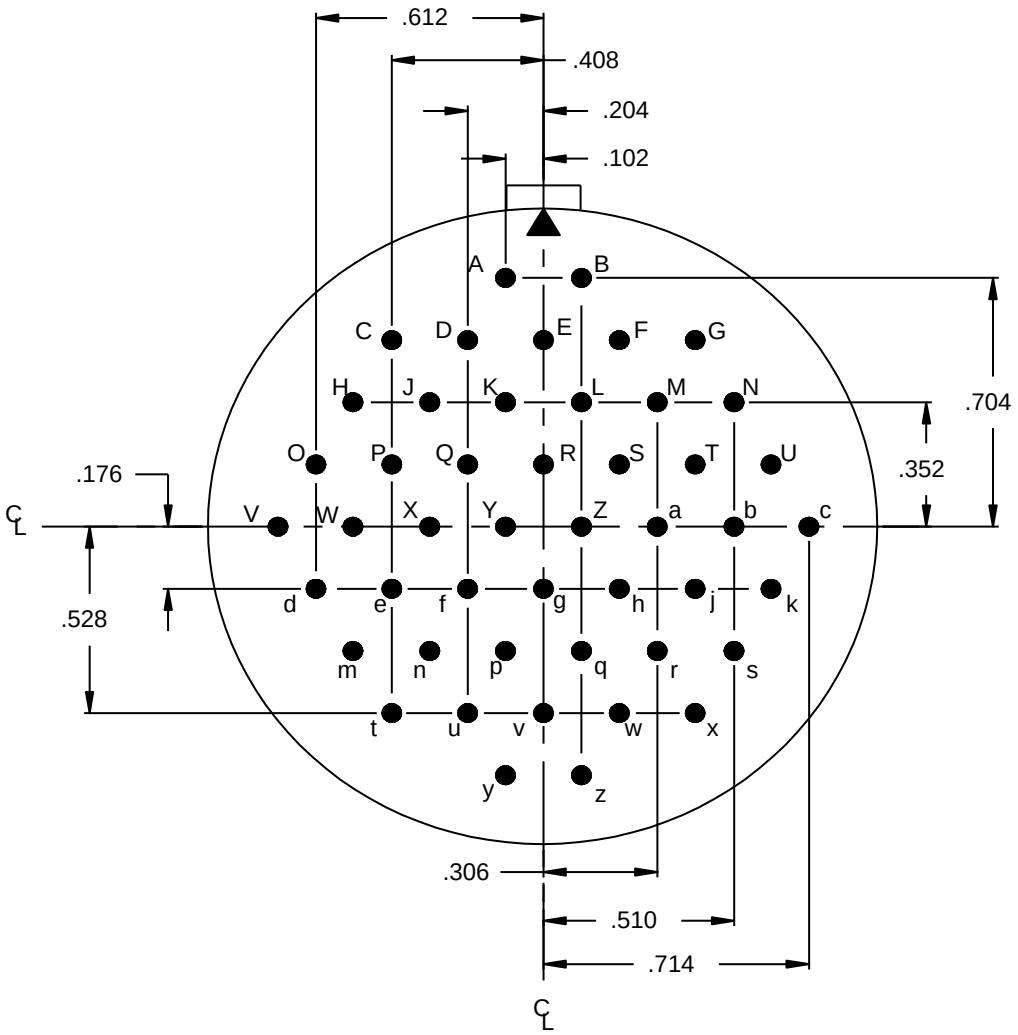

36-10

Contacts (Insert arrangement 36-10)		
Contact position identification (ID)	Contact location	
	X-axis (mm)	Y-axis (mm)
A	-.102 (2.59)	+.704 (17.88)
B	+.102 (2.59)	+.704 (17.88)
C	-.408 (10.36)	+.528 (13.41)
D	-.204 (5.18)	+.528 (13.41)
E	+.000 (0.00)	+.528 (13.41)
F	+.204 (5.18)	+.528 (13.41)
G	+.408 (10.36)	+.528 (13.41)
H	-.510 (12.95)	+.352 (8.94)
J	-.306 (0.00)	+.352 (8.94)

FIGURE 12. Insert arrangement, electrical connector, shell size 36, MIL-DTL-22992, classes C, J and R, MIL-DTL-83723, series II, and SAE-AS50151 and SAE-AS95234 - Continued.

Contacts (Insert arrangement 36-10)		
Contact position identification (ID)	Contact location	
	X-axis (mm)	Y-axis (mm)
K	-.102 (2.59)	+.352 (8.94)
L	+.102 (2.59)	+.352 (8.94)
M	+.306 (0.00)	+.352 (8.94)
N	+.510 (12.95)	+.352 (8.94)
O	-.612 (15.54)	+.176 (4.47)
P	-.408 (10.36)	+.176 (4.47)
Q	-.204 (5.18)	+.176 (4.47)
R	+.000 (0.00)	+.176 (4.47)
S	+.204 (5.18)	+.176 (4.47)
T	+.408 (10.36)	+.176 (4.47)
U	+.612 (15.54)	+.176 (4.47)
V	-.714 (18.14)	+.000 (0.00)
W	-.510 (12.95)	+.000 (0.00)
X	-.306 (0.00)	+.000 (0.00)
Y	-.102 (2.59)	+.000 (0.00)
Z	+.102 (2.59)	+.000 (0.00)
a	+.306 (0.00)	+.000 (0.00)
b	+.510 (12.95)	+.000 (0.00)
c	+.714 (18.14)	+.000 (0.00)
d	-.612 (15.54)	-.176 (4.47)
e	-.408 (10.36)	-.176 (4.47)
f	-.204 (5.18)	-.176 (4.47)
g	+.000 (0.00)	-.176 (4.47)
h	+.204 (5.18)	-.176 (4.47)
j	+.408 (10.36)	-.176 (4.47)
k	+.612 (15.54)	-.176 (4.47)
m	-.510 (12.95)	-.352 (8.94)
n	-.306 (0.00)	-.352 (8.94)
p	-.102 (2.59)	-.352 (8.94)
q	+.102 (2.59)	-.352 (8.94)
r	+.306 (0.00)	-.352 (8.94)
s	+.510 (12.95)	-.352 (8.94)
t	-.408 (10.36)	-.528 (13.41)
u	-.204 (5.18)	-.528 (13.41)
v	+.000 (0.00)	-.528 (13.41)
w	+.204 (5.18)	-.528 (13.41)
x	+.408 (10.36)	-.528 (13.41)
y	-.102 (2.59)	-.704 (17.88)
z	+.102 (2.59)	-.704 (17.88)

FIGURE 12. Insert arrangement, electrical connector, shell size 36, MIL-DTL-22992, classes C, J and R, MIL-DTL-83723, series II, and SAE-AS50151 and SAE-AS95234 - Continued.

Insert arrangement 36-10						
Shell size	Arrangement number	Number of contacts	Size contacts	Service rating	Contact location	Supersedes
36	-10	48	16	A	All	MS33690-10

Alternate insert positions			
A degrees (A°)			
W	X	Y	Z
80	125	235	280

FIGURE 12. Insert arrangement, electrical connector, shell size 36, MIL-DTL-22992, classes C, J and R, MIL-DTL-83723, series II, and SAE-AS50151 and SAE-AS95234 - Continued.

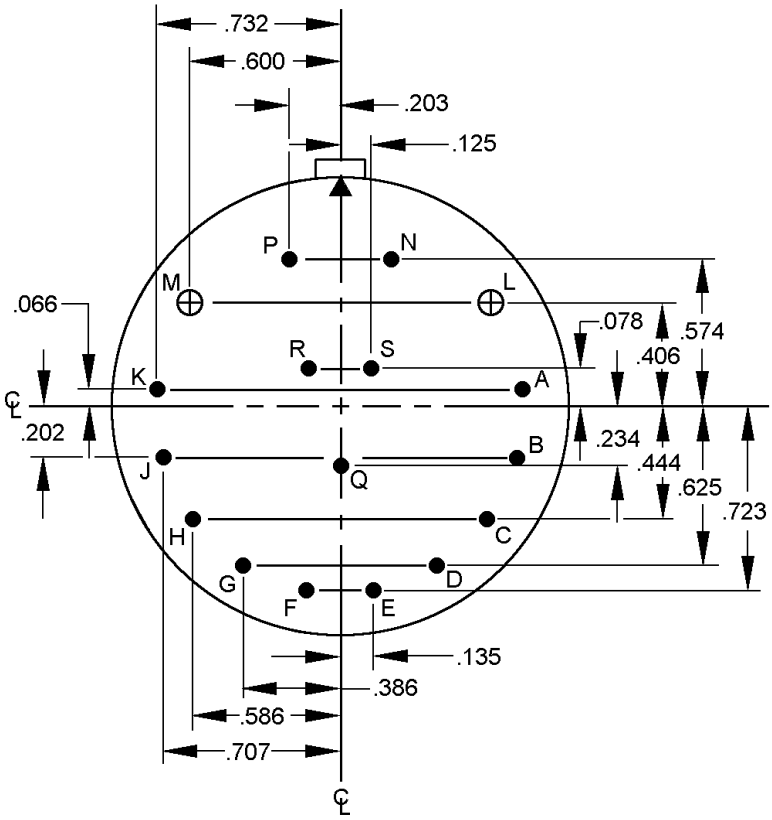

36-13

(Inactive for New Design after 17 Dec 1958 for SAE-AS50151 and MIL-DTL-83723 series II. Active for new design for SAE-AS95234.)

(Not applicable to MIL-DTL-22992.)

Contacts (Insert arrangement 36-13)		
Contact position (ID)	Contact location	
	X-axis (mm)	Y-axis (mm)
A	+.732 (18.59)	+.066 (1.68)
B	+.707 (17.96)	-.202 (5.13)
C	+.586 (14.88)	-.444 (11.28)
D	+.386 (9.80)	-.625 (15.88)
E	+.135 (3.43)	-.723 (18.36)
F	-.135 (3.43)	-.723 (18.36)
G	-.386 (9.80)	-.625 (15.88)
H	-.586 (14.88)	-.444 (11.28)
J	-.707 (17.96)	-.202 (5.13)

Contacts (Insert arrangement 36-13)		
Contact position (ID)	Contact location	
	X-axis (mm)	Y-axis (mm)
K	-.732 (18.59)	+.066 (1.68)
L	+.600 (15.24)	+.406 (10.31)
M	-.600 (14.24)	+.406 (10.31)
N	+.203 (5.16)	+.574 (14.58)
P	-.203 (5.16)	+.574 (14.58)
R	-.125 (3.18)	+.078 (1.98)
S	+.125 (3.18)	+.078 (1.98)
Q	+.000 (0.00)	-.234 (5.94)
---	---	---

FIGURE 12. Insert arrangement, electrical connector, shell size 36, MIL-DTL-22992, classes C, J and R, MIL-DTL-83723, series II, and SAE-AS50151 and SAE-AS95234 - Continued..

Insert arrangement 36-13						
Shell size	Arrangement number	Number of contacts	Size contacts	Service rating	Contact location	Supersedes
36	-13	3	16	E	N,P,Q	MS33690-13
		12		A	All others	
		2	12	A	M,L	

Alternate insert positions			
A degrees (A°)			
W	X	Y	Z
80	110	250	280

FIGURE 12. Insert arrangement, electrical connector, shell size 36, MIL-DTL-22992, classes C, J and R, MIL-DTL-83723, series II, and SAE-AS50151 and SAE-AS95234 - Continued..

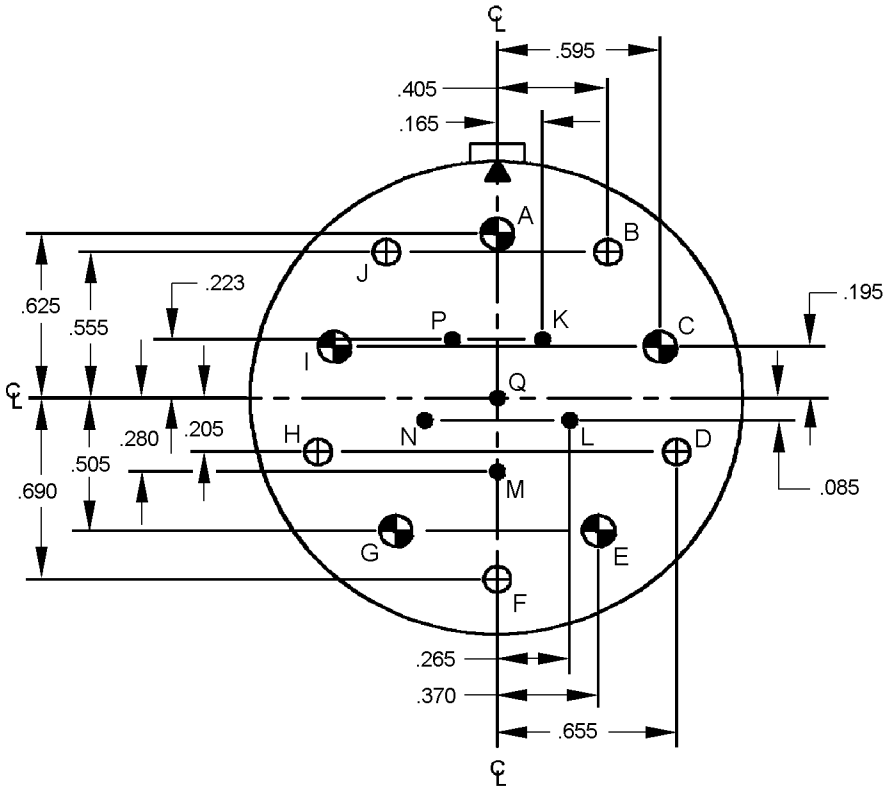

36-14

(Inactive for New Design after 17 Dec 1958 for SAE-AS50151 and MIL-DTL-83723 series II. Active for new design for SAE-AS95234.)

(Not applicable to MIL-DTL-22992.)

Contacts (Insert arrangement 36-14)		
Contact position (ID)	Contact location	
	X-axis (mm)	Y-axis (mm)
A	+.000 (0.00)	+.625 (15.88)
B	+.405 (10.29)	+.555 (14.10)
C	+.595 (15.11)	+.195 (4.95)
D	+.655 (16.64)	-.205 (5.21)
E	+.370 (9.40)	-.505 (12.83)
F	+.000 (0.00)	-.690 (17.53)
G	-.370 (9.40)	-.505 (12.83)
H	-.655 (16.64)	-.205 (5.21)

Contacts (Insert arrangement 36-14)		
Contact position (ID)	Contact location	
	X-axis (mm)	Y-axis (mm)
I	-.595 (15.11)	+.195 (4.95)
J	-.405 (10.29)	+.555 (14.10)
K	+.165 (4.19)	+.223 (5.66)
L	+.265 (6.73)	-.085 (2.16)
M	+.000 (0.00)	-.280 (7.11)
N	-.265 (6.73)	-.085 (2.16)
P	-.165 (4.19)	+.223 (5.66)
Q	+.000 (0.00)	+.000 (0.00)

FIGURE 12. Insert arrangement, electrical connector, shell size 36, MIL-DTL-22992, classes C, J and R, MIL-DTL-83723, series II, and SAE-AS50151 and SAE-AS95234 - Continued.

Insert arrangement 36-14						
Shell size	Arrangement number	Number of contacts	Size contacts	Service rating	Contact location	Supersedes
36	-14	6	16	D	All others	MS33690-14
		5	12	D	B,D,F,H,J	
		5	8	D	A,C,E,G,I	

Alternate insert positions			
A degrees (A°)			
W	X	Y	Z
90	180	270	---

FIGURE 12. Insert arrangement, electrical connector, shell size 36, MIL-DTL-22992, classes C, J and R, MIL-DTL-83723, series II, and SAE-AS50151 and SAE-AS95234 - Continued.

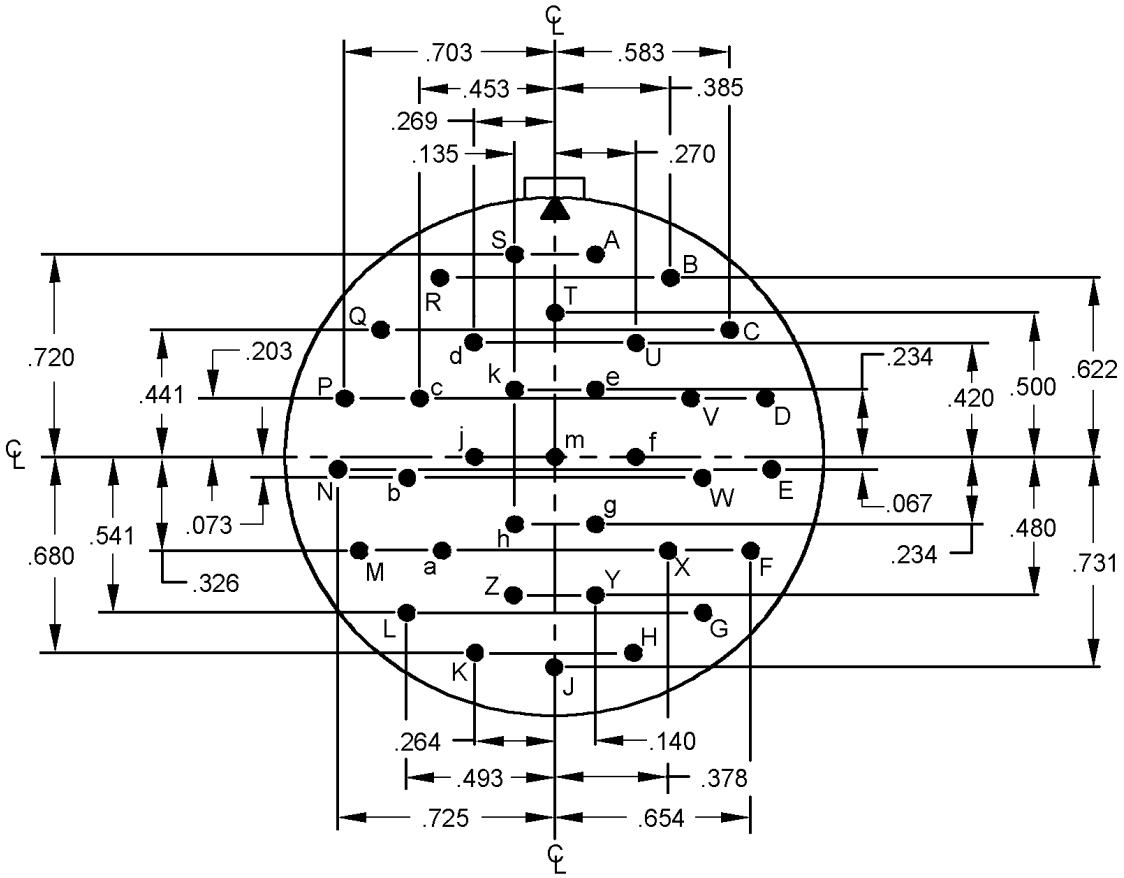

36-15

Contacts (Insert arrangement 36-15)		
Contact position identification (ID)	Contact location	
	X-axis (mm)	Y-axis (mm)
A	+.140 (3.56)	+.720 (18.29)
B	+.102 (2.59)	+.622 (15.80)
C	+.583 (14.81)	+.441 (11.20)
D	+.703 (17.86)	+.203 (5.16)
E	+.140 (3.56)	-.067 (1.70)
F	+.654 (16.61)	-.326 (8.28)
G	+.493 (12.52)	-.541 (13.74)
H	-.510 (12.95)	-.680 (17.27)
J	+.000 (0.00)	-.731 (18.57)
K	-.102 (2.59)	-.680 (17.27)
L	-.493 (12.52)	-.541 (13.74)
M	-.654 (16.61)	-.326 (8.28)
N	-.725 (18.42)	-.067 (1.70)
O	-.720 (18.29)	+.176 (4.47)
P	-.408 (10.36)	+.203 (5.16)
Q	-.204 (5.18)	+.176 (4.47)

FIGURE 12. Insert arrangement, electrical connector, shell size 36, MIL-DTL-22992, classes C, J and R, MIL-DTL-83723, series II, and SAE-AS50151 and SAE-AS95234 - Continued.

Contacts (Insert arrangement 36-15)		
Contact position identification (ID)	Contact location	
	X-axis (mm)	Y-axis (mm)
R	+.000 (0.00)	+.622 (15.80)
S	+.204 (5.18)	+.720 (18.29)
T	+.000 (0.00)	+.500 (12.70)
U	+.270 (6.86)	+.420 (10.67)
V	+.453 (11.51)	+.203 (5.16)
W	+.493 (12.52)	+.000 (0.00)
X	+.378 (9.60)	+.000 (0.00)
Y	+.140 (3.56)	+.000 (0.00)
Z	+.102 (2.59)	+.000 (0.00)
a	-.378 (9.60)	-.326 (8.28)
b	-.493 (12.52)	+.000 (0.00)
c	-.453 (11.51)	+.203 (5.16)
d	-.269 (6.83)	+.420 (10.67)
e	-.140 (3.56)	-.176 (4.47)
f	+.270 (6.86)	+.000 (0.00)
g	+.000 (0.00)	-.176 (4.47)
h	+.204 (5.18)	-.176 (4.47)
j	-.269 (6.83)	+.000 (0.00)
k	+.360 (9.14)	+.234 (5.94)
m	+.000 (0.00)	+.000 (0.00)

Shell size	Arrangement number	Number of contacts	Size contacts	Service rating	Contact location	Supersedes
36	-15	35	16	D	M	MS33690-15
				A	All others	

Alternate insert positions			
A degrees (A°)			
W	X	Y	Z
60	125	245	305

FIGURE 12. Insert arrangement, electrical connector, shell size 36, MIL-DTL-22992, classes C, J and R, MIL-DTL-83723, series II, and SAE-AS50151 and SAE-AS95234 - Continued.

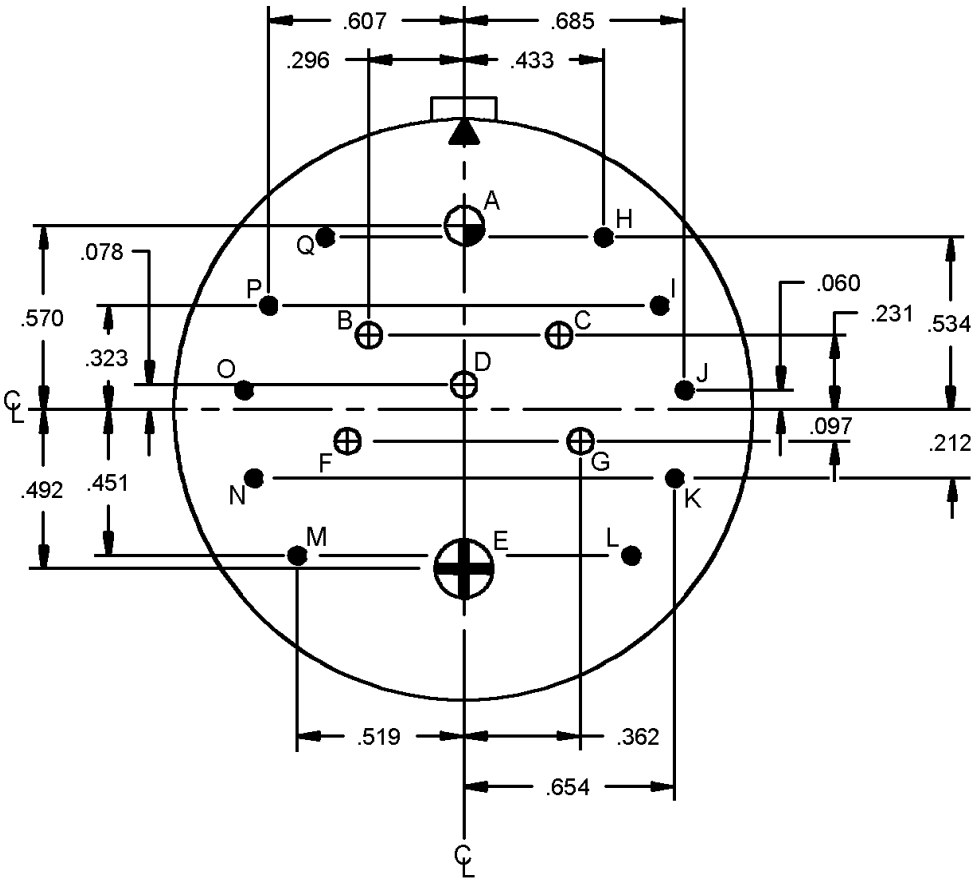

36-19

(Inactive for New Design after 17 Dec 1958 for SAE-AS50151 and MIL-DTL-83723 series II. Active for new design for SAE-AS95234.)

(Not applicable to MIL-DTL-22992.)

Contacts (Insert arrangement 36-19)		
Contact position (ID)	Contact location	
	X-axis (mm)	Y-axis (mm)
A	+.000 (0.00)	+.570 (14.48)
B	-.296 (7.52)	+.231 (5.87)
C	+.296 (7.52)	+.231 (5.87)
D	+.000 (0.00)	+.078 (1.98)
E	+.000 (0.00)	-.492 (12.50)
F	-.362 (9.19)	-.097 (2.46)
G	+.362 (9.19)	-.097 (2.46)
H	+.433 (11.00)	+.534 (13.56)
I	+.607 (15.42)	+.323 (8.20)

Contacts (Insert arrangement 36-19)		
Contact position (ID)	Contact location	
	X-axis (mm)	Y-axis (mm)
J	+.685 (17.40)	+.060 (1.52)
K	+.654 (16.61)	-.212 (5.38)
L	+.519 (13.18)	-.451 (11.46)
M	-.519 (13.18)	-.451 (11.46)
N	-.654 (16.61)	-.212 (5.38)
O	-.685 (17.40)	+.060 (1.52)
P	-.607 (15.42)	+.323 (8.20)
Q	-.433 (11.00)	+.534 (13.56)
---	---	---

FIGURE 12. Insert arrangement, electrical connector, shell size 36, MIL-DTL-22992, classes C, J and R, MIL-DTL-83723, series II, and SAE-AS50151 and SAE-AS95234 - Continued.

Insert arrangement 36-19						
Shell size	Arrangement number	Number of contacts	Size contacts	Service rating	Contact location	Supersedes
36	-19	10	16	D	All others	MS33690-19
		5	12	D	B,C,D,F,G	
		1	4	D	A	
		1	0	D	E	

Alternate insert positions			
A degrees (A°)			
W	X	Y	Z
80	110	250	280

FIGURE 12. Insert arrangement, electrical connector, shell size 36, MIL-DTL-22992, classes C, J and R, MIL-DTL-83723, series II, and SAE-AS50151 and SAE-AS95234 - Continued.

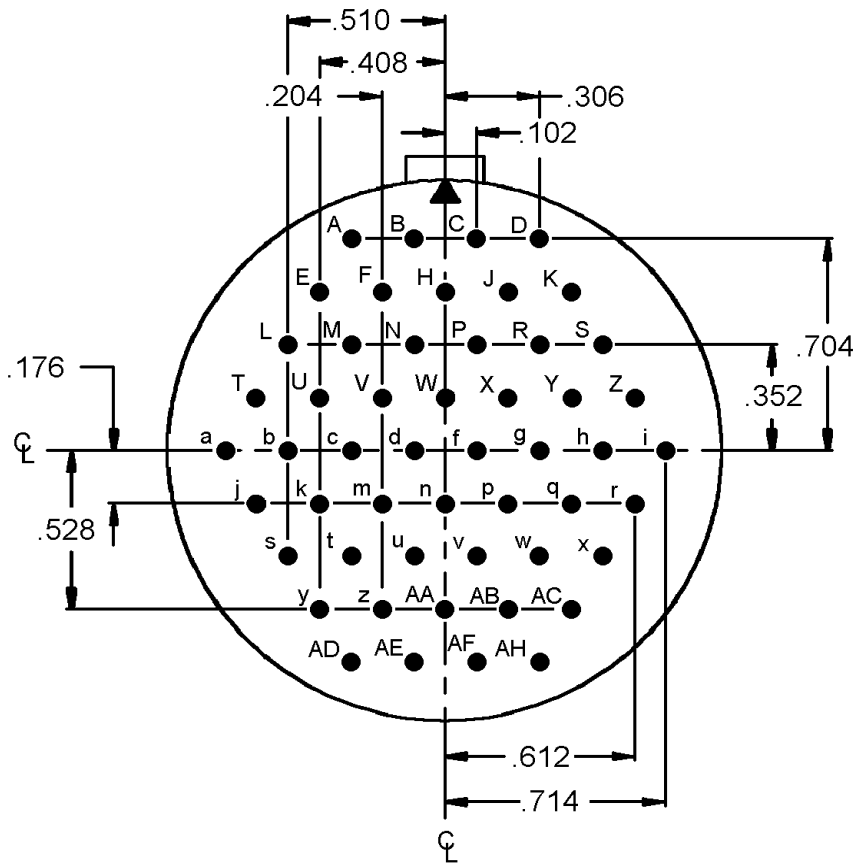

36-52

Contacts (Insert arrangement 36-52)		
Contact position identification (ID)	Contact location	
	X-axis (mm)	Y-axis (mm)
A	-.306 (7.77)	+.704 (17.88)
B	-.102 (2.59)	+.704 (17.88)
C	+.102 (2.59)	+.704 (17.88)
D	+.306 (7.77)	+.704 (17.88)
E	-.408 (10.36)	+.528 (13.41)
F	-.204 (5.18)	+.528 (13.41)
H	+.000 (0.00)	+.528 (13.41)
J	+.204 (5.18)	+.528 (13.41)
K	+.408 (10.36)	+.528 (13.41)
L	-.510 (12.95)	+.352 (8.94)
M	-.306 (7.77)	+.352 (8.94)
N	-.102 (2.59)	+.352 (8.94)
P	+.102 (2.59)	+.352 (8.94)
R	+.306 (7.77)	+.352 (8.94)
S	+.510 (12.95)	+.352 (8.94)
T	-.612 (15.54)	+.176 (4.47)

FIGURE 12. Insert arrangement, electrical connector, shell size 36, MIL-DTL-22992, classes C, J and R, MIL-DTL-83723, series II, and SAE-AS50151 and SAE-AS95234 - Continued.

Contacts (Insert arrangement 36-52)		
Contact position identification (ID)	Contact location	
	X-axis (mm)	Y-axis (mm)
U	-.408 (10.36)	+.176 (4.47)
V	-.204 (5.18)	+.176 (4.47)
W	+.000 (0.00)	+.176 (4.47)
X	+.204 (5.18)	+.176 (4.47)
Y	+.408 (10.36)	+.176 (4.47)
Z	+.612 (15.54)	+.176 (4.47)
a	-.714 (18.14)	+.000 (0.00)
b	-.510 (12.95)	+.000 (0.00)
c	-.306 (7.77)	+.000 (0.00)
d	-.102 (2.59)	+.000 (0.00)
f	+.102 (2.59)	+.000 (0.00)
g	+.306 (7.77)	+.000 (0.00)
h	+.510 (12.95)	+.000 (0.00)
i	+.714 (18.14)	+.000 (0.00)
j	-.612 (15.54)	-.176 (4.47)
k	-.408 (10.36)	-.176 (4.47)
m	-.204 (5.18)	-.176 (4.47)
n	+.000 (0.00)	-.176 (4.47)
p	+.204 (5.18)	-.176 (4.47)
q	+.408 (10.36)	-.176 (4.47)
r	+.612 (15.54)	-.176 (4.47)
s	-.510 (12.95)	-.352 (8.94)
t	-.306 (7.77)	-.352 (8.94)
u	-.102 (2.59)	-.352 (8.94)
v	+.102 (2.59)	-.352 (8.94)
w	+.306 (7.77)	-.352 (8.94)
x	+.510 (12.95)	-.352 (8.94)
y	-.408 (10.36)	-.528 (13.41)
z	-.204 (5.18)	-.528 (13.41)
AA	+.000 (0.00)	-.528 (13.41)
AB	+.204 (5.18)	-.528 (13.41)
AC	+.408 (10.36)	-.528 (13.41)
AD	-.306 (7.77)	-.704 (17.88)
AE	-.102 (2.59)	-.704 (17.88)
AF	+.102 (2.59)	-.704 (17.88)
AH	+.306 (7.77)	-.704 (17.88)

Shell size	Arrangement number	Number of contacts	Size contacts	Service rating	Contact location	Supersedes
36	-52	52	16	A	All	MS33690-52

Alternate insert positions			
A degrees (A°)			
W	X	Y	Z
72	144	216	288

FIGURE 12. Insert arrangement, electrical connector, shell size 36, MIL-DTL-22992, classes C, J and R, MIL-DTL-83723, series II, and SAE-AS50151 and SAE-AS95234 - Continued.

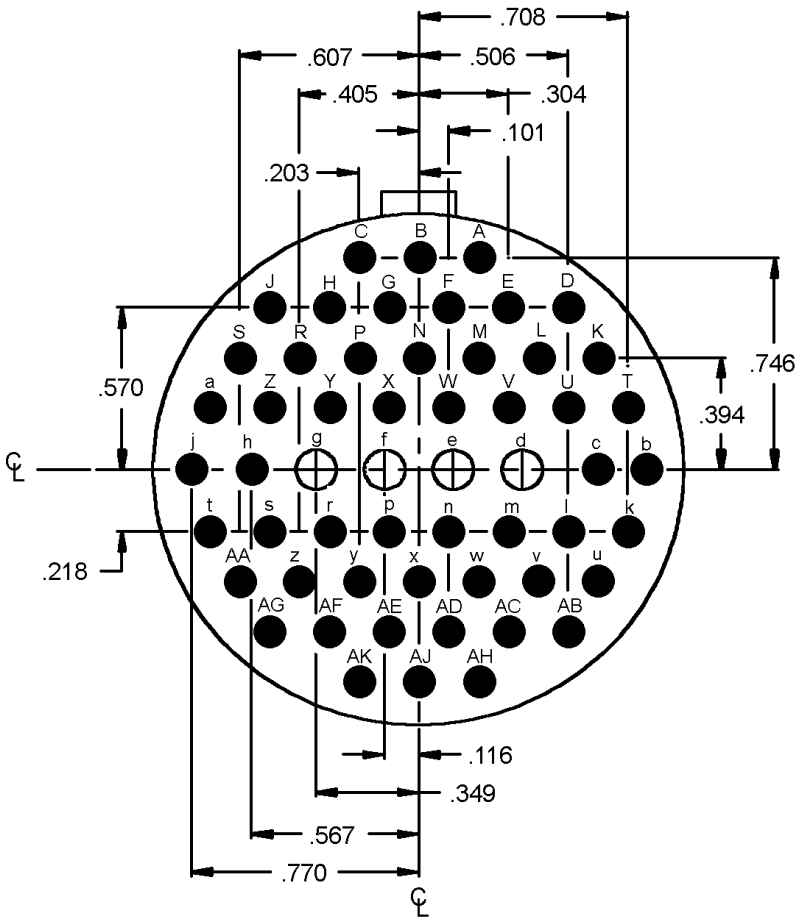

36-66

Contacts (Insert arrangement 36-66)		
Contact position identification (ID)	Contact location	
	X-axis (mm)	Y-axis (mm)
A	+.203 (5.16)	+.746 (18.95)
B	+.000 (0.00)	+.746 (18.95)
C	-.203 (5.16)	+.746 (18.95)
D	+.506 (12.85)	+.570 (14.48)
E	+.304 (7.72)	+.570 (14.48)
F	+.101 (2.57)	+.570 (14.48)
G	-.101 (2.57)	+.570 (14.48)
H	-.304 (7.72)	+.570 (14.48)
J	-.506 (12.85)	+.570 (14.48)
K	+.607 (15.42)	+.394 (10.01)

FIGURE 12. Insert arrangement, electrical connector, shell size 36, MIL-DTL-22992, classes C, J and R, MIL-DTL-83723, series II, and SAE-AS50151 and SAE-AS95234 - Continued.

Contacts (Insert arrangement 36-66)		
Contact position identification (ID)	Contact location	
	X-axis (mm)	Y-axis (mm)
L	+.405 (10.29)	+.394 (10.01)
M	+.203 (5.16)	+.394 (10.01)
N	+.000 (0.00)	+.394 (10.01)
P	-.203 (5.16)	+.394 (10.01)
R	-.405 (10.29)	+.394 (10.01)
S	-.607 (15.42)	+.394 (10.01)
T	+.708 (17.98)	+.218 (5.54)
U	+.506 (12.85)	+.218 (5.54)
V	+.304 (7.72)	+.218 (5.54)
W	+.101 (2.57)	+.218 (5.54)
X	-.101 (2.57)	+.218 (5.54)
Y	-.304 (7.72)	+.218 (5.54)
Z	-.506 (12.85)	+.218 (5.54)
a	-.708 (17.98)	+.218 (5.54)
b	+.770 (19.56)	+.000 (0.00)
c	+.567 (14.40)	+.000 (0.00)
d	+.349 (8.86)	+.000 (0.00)
e	+.101 (2.57)	+.000 (0.00)
f	-.101 (2.57)	+.000 (0.00)
g	-.349 (8.86)	+.000 (0.00)
h	-.567 (14.40)	+.000 (0.00)
j	-.770 (19.56)	+.000 (0.00)
k	+.708 (17.98)	-.218 (5.54)
l	+.506 (12.85)	-.218 (5.54)
m	+.304 (7.72)	-.218 (5.54)
n	+.101 (2.57)	-.218 (5.54)
p	-.101 (2.57)	-.218 (5.54)
r	-.304 (7.72)	-.218 (5.54)
s	-.506 (12.85)	-.218 (5.54)
t	-.708 (17.98)	-.218 (5.54)
u	+.607 (15.42)	-.394 (10.01)
v	+.405 (10.29)	-.394 (10.01)
w	+.203 (5.16)	-.394 (10.01)
x	+.000 (0.00)	-.394 (10.01)
y	-.203 (5.16)	-.394 (10.01)
z	-.405 (10.29)	-.394 (10.01)
AA	-.607 (15.42)	-.394 (10.01)
AB	+.506 (12.85)	-.570 (14.48)
AC	+.304 (7.72)	-.570 (14.48)
AD	+.101 (2.57)	-.570 (14.48)
AE	-.101 (2.57)	-.570 (14.48)
AF	-.304 (7.72)	-.570 (14.48)
AG	-.506 (12.85)	-.570 (14.48)
AH	+.203 (5.16)	-.746 (18.95)
AJ	+.000 (0.00)	-.746 (18.95)
AK	-.203 (5.16)	-.746 (18.95)

FIGURE 12. Insert arrangement, electrical connector, shell size 36, MIL-DTL-22992, classes C, J and R, MIL-DTL-83723, series II, and SAE-AS50151 and SAE-AS95234 - Continued.

Insert arrangement 36-66						
Shell size	Arrangement number	Number of contacts	Size contacts	Service rating	Contact location	Supersedes
36	-66	52	16	A	All others	MS33690-66
		4	12		g,f,e,d	

Alternate insert positions			
A degrees (A°)			
W	X	Y	Z
110	250	260	280

FIGURE 12. Insert arrangement, electrical connector, shell size 36, MIL-DTL-22992, classes C, J and R, MIL-DTL-83723, series II, and SAE-AS50151 and SAE-AS95234 - Continued.

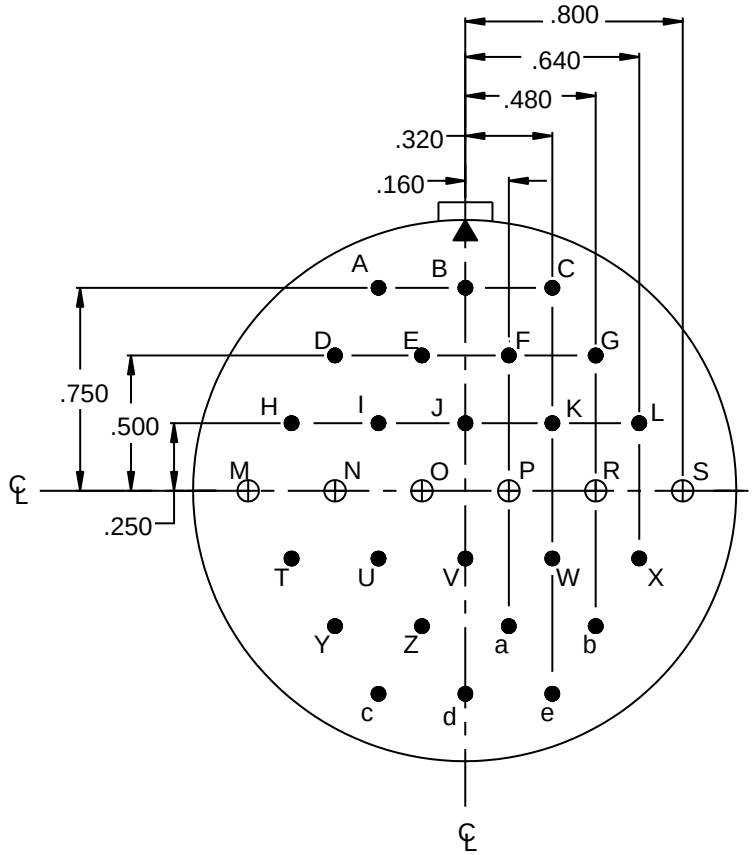

40-1

Contacts (Insert arrangement 40-1)		
Contact position identification (ID)	Contact location	
	X-axis (mm)	Y-axis (mm)
A	-.320 (8.13)	+.750 (19.05)
B	+.000 (0.00)	+.750 (19.05)
C	+.320 (8.13)	+.750 (19.05)
D	-.480 (12.19)	+.500 (12.70)
E	-.160 (4.06)	+.500 (12.70)
F	+.160 (4.06)	+.500 (12.70)
G	+.480 (12.19)	+.500 (12.70)
H	-.640 (16.26)	+.250 (6.35)
I	-.320 (8.13)	+.250 (6.35)
J	+.000 (0.00)	+.250 (6.35)
K	+.320 (8.13)	+.250 (6.35)
L	+.640 (16.26)	+.250 (6.35)
M	-.800 (20.32)	+.000 (0.00)

FIGURE 13. Insert arrangement, electrical connector, shell size 40, MIL-DTL-22992, classes C, J and R, MIL-DTL-83723, series II, and SAE-AS50151.

Contacts (Insert arrangement 40-1)		
Contact position identification (ID)	Contact location	
	X-axis (mm)	Y-axis (mm)
N	-.480 (12.19)	+.000 (0.00)
O	-.160 (4.06)	+.000 (0.00)
P	+.160 (4.06)	+.000 (0.00)
R	+.480 (12.19)	+.000 (0.00)
S	+.800 (20.32)	+.000 (0.00)
T	-.640 (16.26)	-.250 (6.35)
U	-.320 (8.13)	-.250 (6.35)
V	+.000 (0.00)	-.250 (6.35)
W	+.320 (8.13)	-.250 (6.35)
X	+.640 (16.26)	-.250 (6.35)
Y	-.480 (12.19)	-.500 (12.70)
Z	-.160 (4.06)	-.500 (12.70)
a	+.160 (4.06)	-.500 (12.70)
b	+.480 (12.19)	-.500 (12.70)
c	-.320 (8.13)	-.750 (19.05)
d	+.000 (0.00)	-.750 (19.05)
e	+.320 (8.13)	-.750 (19.05)

Shell size	Arrangement number	Number of contacts	Size contacts	Service rating	Contact location	Supersedes
40	-1	24	16	D	All others	MS33691-1
		6	12		M,N,O,P,R,S	

Alternate insert positions			
A degrees (A°)			
W	X	Y	Z
65	130	235	300

FIGURE 13. Insert arrangement, electrical connector, shell size 40, MIL-DTL-22992, classes C, J and R, MIL-DTL-83723, series II, and SAE-AS50151.

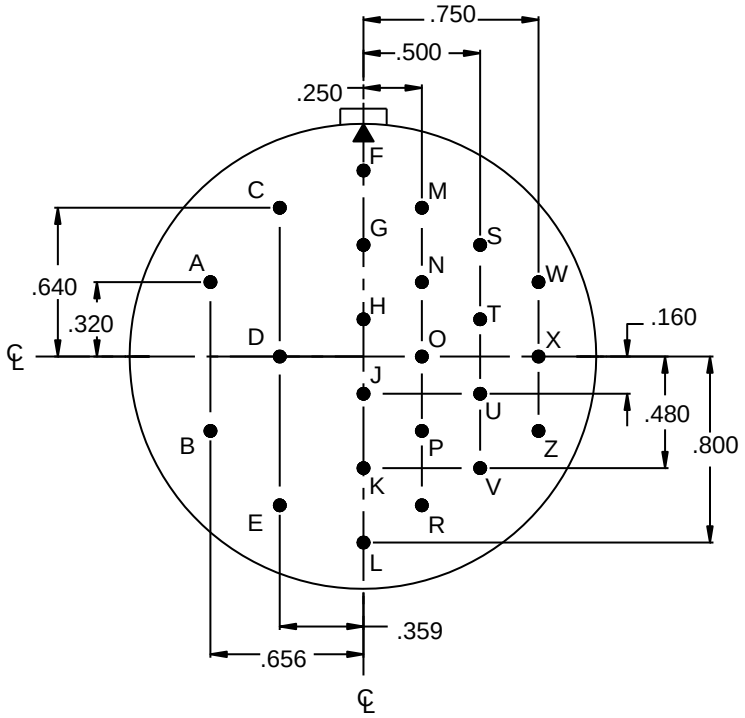

40-2

(Not applicable to MIL-DTL-22992.)

Contacts (Insert arrangement 40-2)		
Contact position (ID)	Contact location	
	X-axis (mm)	Y-axis (mm)
A	-.656 (16.66)	+.320 (8.13)
B	-.656 (16.66)	-.320 (8.13)
C	-.359 (9.12)	+.640 (16.26)
D	-.359 (9.12)	+.000 (0.00)
E	-.359 (9.12)	-.640 (16.26)
F	+.000 (0.00)	+.800 (20.32)
G	+.000 (0.00)	+.480 (12.19)
H	+.000 (0.00)	+.160 (4.06)
J	+.000 (0.00)	-.160 (4.06)
K	+.000 (0.00)	-.480 (12.19)
L	+.000 (0.00)	-.800 (20.32)
M	+.250 (6.35)	+.640 (16.26)

Contacts (Insert arrangement 40-2)		
Contact position (ID)	Contact location	
	X-axis (mm)	Y-axis (mm)
N	+.250 (6.35)	+.320 (8.13)
O	+.250 (6.35)	+.000 (0.00)
P	+.250 (6.35)	-.320 (8.13)
R	+.250 (6.35)	-.640 (16.26)
S	+.500 (12.70)	+.480 (12.19)
T	+.500 (12.70)	+.160 (4.06)
U	+.500 (12.70)	-.160 (4.06)
V	+.500 (12.70)	-.480 (12.19)
W	+.750 (19.05)	+.320 (8.13)
X	+.750 (19.05)	+.000 (0.00)
Z	+.750 (19.05)	-.320 (8.13)
---	---	---

FIGURE 13. Insert arrangement, electrical connector, shell size 40, MIL-DTL-22992, classes C, J and R, MIL-DTL-83723, series II, and SAE-AS50151 – Continued.

Insert arrangement 40-2						
Shell size	Arrangement number	Number of contacts	Size contacts	Service rating	Contact location	Supersedes
40	-2	5	16	B	A,B,C,D,E	MS33691-2
		18	16	D	All others	

Alternate insert positions			
A degrees (A°)			
W	X	Y	Z
80	110	250	280

FIGURE 13. Insert arrangement, electrical connector, shell size 40, MIL-DTL-22992, classes C, J and R, MIL-DTL-83723, series II, and SAE-AS50151 – Continued.

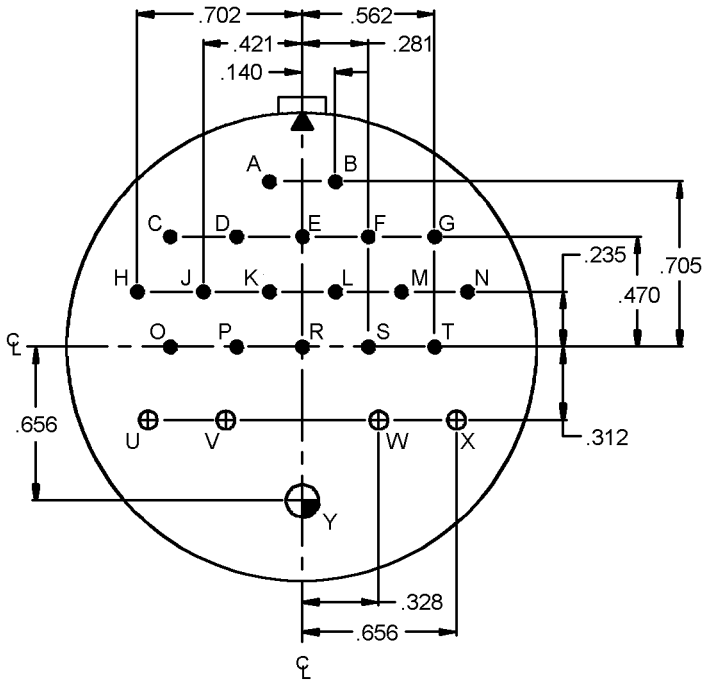

40-3

(Not applicable to MIL-DTL-22992)

Contacts (Insert arrangement 40-3)		
Contact position (ID)	Contact location	
	X-axis (mm)	Y-axis (mm)
A	-.140 (3.56)	+.705 (17.91)
B	+.140 (3.56)	+.705 (17.91)
C	-.562 (14.27)	+.470 (11.94)
D	-.281 (7.14)	+.470 (11.94)
E	+.000 (0.00)	+.470 (11.94)
F	+.281 (7.14)	+.470 (11.94)
G	+.562 (14.27)	+.470 (11.94)
H	-.702 (17.83)	+.235 (5.97)
J	-.421 (10.69)	+.235 (5.97)
K	-.140 (3.56)	+.235 (5.97)
L	+.140 (3.56)	+.235 (5.97)
M	+.421 (10.69)	+.235 (5.97)

Contacts (Insert arrangement 40-3)		
Contact position (ID)	Contact location	
	X-axis (mm)	Y-axis (mm)
N	+.702 (17.83)	+.235 (5.97)
O	-.562 (14.27)	+.000 (0.00)
P	-.281 (7.14)	+.000 (0.00)
R	+.000 (0.00)	+.000 (0.00)
S	+.281 (7.14)	+.000 (0.00)
T	+.562 (14.27)	+.000 (0.00)
U	-.656 (16.66)	-.312 (7.92)
V	-.328 (8.33)	-.312 (7.92)
W	+.328 (8.33)	-.312 (7.92)
X	+.656 (16.66)	-.312 (7.92)
Y	+.000 (0.00)	-.656 (16.66)
---	---	---

FIGURE 13. Insert arrangement, electrical connector, shell size 40, MIL-DTL-22992, classes C, J and R, MIL-DTL-83723, series II, and SAE-AS50151 – Continued.

Insert arrangement 40-3						
Shell size	Arrangement number	Number of contacts	Size contacts	Service rating	Contact location	Supersedes
40	-3	18	16	D	All others	MS33691-3
		4	12	D	U,V,W,X	
		1	4	D	Y	

Alternate insert positions			
A degrees (A°)			
W	X	Y	Z
80	110	250	280

FIGURE 13. Insert arrangement, electrical connector, shell size 40, MIL-DTL-22992, classes C, J and R, MIL-DTL-83723, series II, and SAE-AS50151 – Continued.

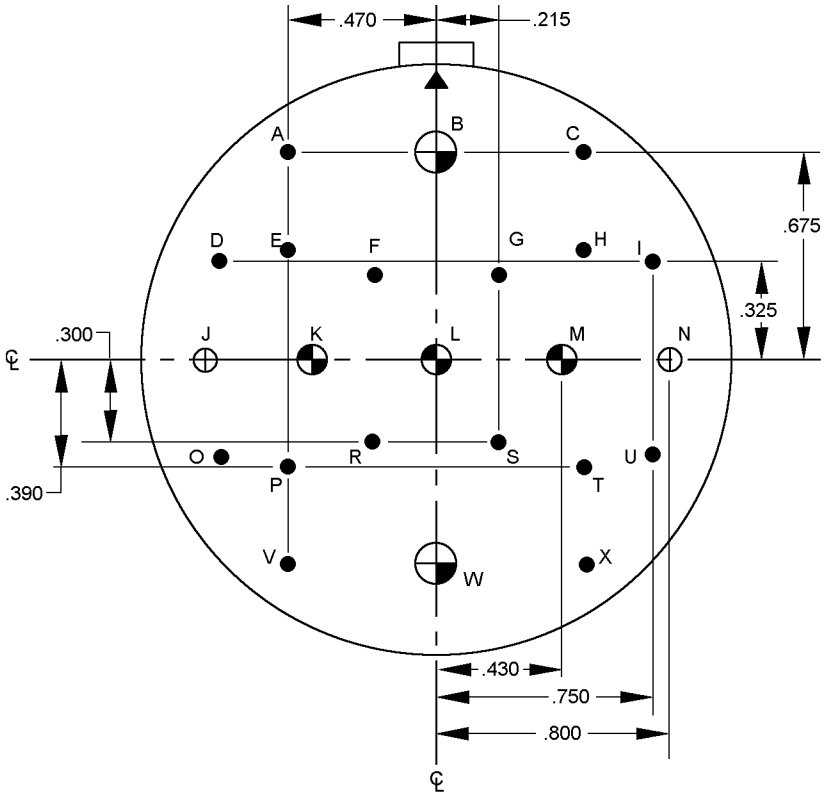

40-4

(Not applicable to MIL-DTL-22992.)

Contacts (Insert arrangement 40-4)		
Contact position (ID)	Contact location	
	X-axis (mm)	Y-axis (mm)
A	-.470 (11.94)	+.675 (17.15)
B	+.000 (0.00)	+.675 (17.15)
C	+.470 (11.94)	+.675 (17.15)
D	-.750 (19.05)	+.325 (8.26)
E	-.470 (11.94)	+.390 (9.91)
F	-.215 (5.46)	+.300 (7.62)
G	+.215 (5.46)	+.300 (7.62)
H	+.470 (11.94)	+.390 (9.91)
I	+.750 (19.05)	+.325 (8.26)
J	-.800 (20.32)	+.000 (0.00)
K	-.430 (10.92)	+.000 (0.00)
L	+.000 (0.00)	+.000 (0.00)

Contacts (Insert arrangement 40-4)		
Contact position (ID)	Contact location	
	X-axis (mm)	Y-axis (mm)
M	+.430 (10.92)	+.000 (0.00)
N	+.800 (20.32)	+.000 (0.00)
O	-.750 (19.05)	-.325 (8.26)
P	-.470 (11.94)	-.390 (9.91)
R	-.215 (5.46)	-.300 (7.62)
S	+.215 (5.46)	-.300 (7.62)
T	+.470 (11.94)	-.390 (9.91)
U	+.750 (19.05)	-.325 (8.26)
V	-.470 (11.94)	-.675 (17.15)
W	+.000 (0.00)	-.675 (17.15)
X	+.470 (11.94)	-.675 (17.15)
---	---	---

FIGURE 13. Insert arrangement, electrical connector, shell size 40, MIL-DTL-22992, classes C, J and R, MIL-DTL-83723, series II, and SAE-AS50151 – Continued.

Insert arrangement 40-4						
Shell size	Arrangement number	Number of contacts	Size contacts	Service rating	Contact location	Supersedes
40	-4	16	16	D	All others	MS33691-4
		2	12	D	J,N	
		3	8	D	K,L,M	
		2	4	D	B,W	

Alternate insert positions			
A degrees (A°)			
W	X	Y	Z
80	110	250	280

FIGURE 13. Insert arrangement, electrical connector, shell size 40, MIL-DTL-22992, classes C, J and R, MIL-DTL-83723, series II, and SAE-AS50151 – Continued.

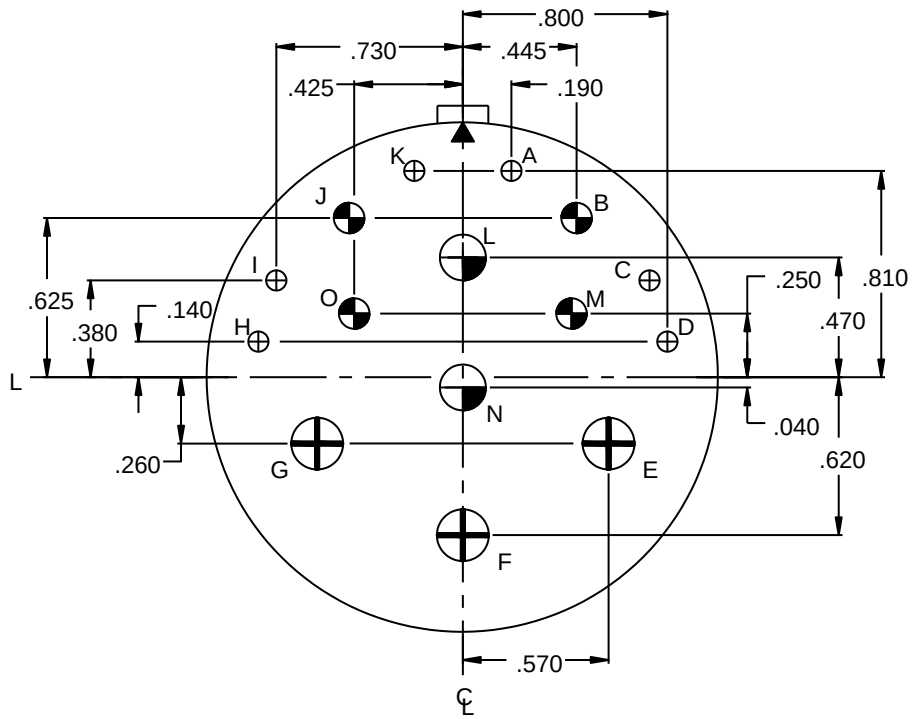

40-5

(Not applicable to MIL-DTL-22992.)

Contacts (Insert arrangement 40-5)		
Contact position (ID)	Contact location	
	X-axis (mm)	Y-axis (mm)
A	+.190 (4.83)	+.810 (20.57)
B	+.445 (11.30)	+.625 (15.88)
C	+.730 (18.54)	+.380 (9.65)
D	+.800 (20.32)	+.140 (3.56)
E	+.570 (14.48)	-.260 (6.60)
F	+.000 (0.00)	-.620 (15.75)
G	-.570 (14.48)	-.260 (6.60)
H	-.800 (20.32)	+.140 (3.56)

Contacts (Insert arrangement 40-5)		
Contact position (ID)	Contact location	
	X-axis (mm)	Y-axis (mm)
I	-.730 (18.54)	+.380 (9.65)
J	-.445 (11.30)	+.625 (15.88)
K	-.190 (4.83)	+.810 (20.57)
L	+.000 (0.00)	+.470 (11.94)
M	+.425 (10.80)	+.250 (6.35)
N	+.000 (0.00)	-.040 (1.02)
O	-.425 (10.80)	+.250 (6.35)
---	---	---

FIGURE 13. Insert arrangement, electrical connector, shell size 40, MIL-DTL-22992, classes C, J and R, MIL-DTL-83723, series II, and SAE-AS50151 – Continued.

Insert arrangement 40-5						
Shell size	Arrangement number	Number of contacts	Size contacts	Service rating	Contact location	Supersedes
40	-5	6	12	A	A,C,D,H,I,K	MS33691-5
		4	8	A	B,M,O,J	
		2	4	A	L,N	
		3	0	A	G,F,E	

Alternate insert positions			
A degrees (A°)			
W	X	Y	Z
80	110	250	280

FIGURE 13. Insert arrangement, electrical connector, shell size 40, MIL-DTL-22992, classes C, J and R, MIL-DTL-83723, series II, and SAE-AS50151 – Continued.

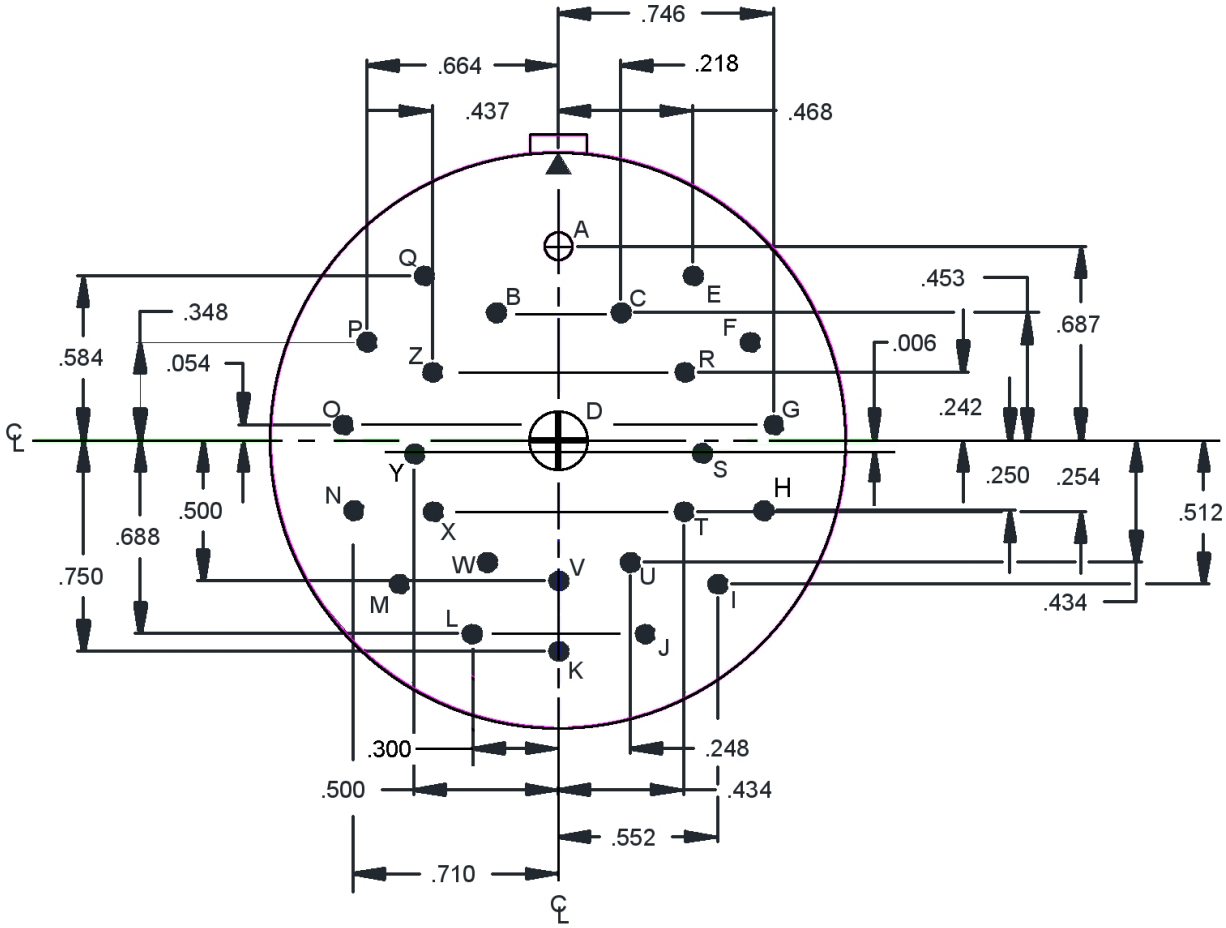

40-6

(Not applicable to MIL-DTL-22992.)

Contacts (Insert arrangement 40-6)		
Contact position identification (ID)	Contact location	
	X-axis (mm)	Y-axis (mm)
A	+.000 (0.00)	+.687 (17.45)
B	-.218 (5.54)	+.453 (11.51)
C	+.218 (5.54)	+.453 (11.51)
D	+.000 (0.00)	+.000 (0.00)
E	+.468 (11.89)	+.584 (14.83)
F	+.664 (16.87)	+.348 (8.84)
G	+.746 (18.95)	+.054 (1.37)
H	+.710 (18.03)	-.250 (6.35)
I	+.552 (14.02)	-.512 (13.00)
J	+.300 (7.62)	-.688 (17.45)

FIGURE 13. Insert arrangement, electrical connector, shell size 40, MIL-DTL-22992, classes C, J and R, MIL-DTL-83723, series II, and SAE-AS50151 – Continued.

Contacts (Insert arrangement 40-6)		
Contact position identification (ID)	Contact location	
	X-axis (mm)	Y-axis (mm)
K	+.000 (0.00)	-.750 (19.05)
L	-.300 (7.62)	-.688 (17.45)
M	-.552 (14.02)	-.512 (13.00)
N	-.710 (18.03)	-.250 (6.35)
O	-.746 (18.95)	+.054 (1.37)
P	-.664 (16.87)	+.348 (8.84)
Q	-.468 (11.89)	+.584 (14.84)
R	+.437 (11.10)	+.242 (6.15)
S	+.500 (12.70)	-.006 (0.15)
T	+.434 (11.02)	-.254 (6.15)
U	+.248 (6.30)	-.434 (11.02)
V	+.000 (0.00)	-.500 (12.70)
W	-.248 (6.30)	-.434 (11.02)
X	-.434 (11.02)	-.254 (6.15)
Y	-.500 (12.70)	-.006 (0.15)
Z	-.437 (11.10)	+.242 (6.15)

Shell size	Arrangement number	Number of contacts	Size contacts	Service rating	Contact location	Supersedes
40	-6	24	16	D	All others	MS33691-6
		1	12	D	A	
		1	0	D	D	

Alternate insert positions			
A degrees (A°)			
W	X	Y	Z
80	110	250	280

FIGURE 13. Insert arrangement, electrical connector, shell size 40, MIL-DTL-22992, classes C, J and R, MIL-DTL-83723, series II, and SAE-AS50151 – Continued.

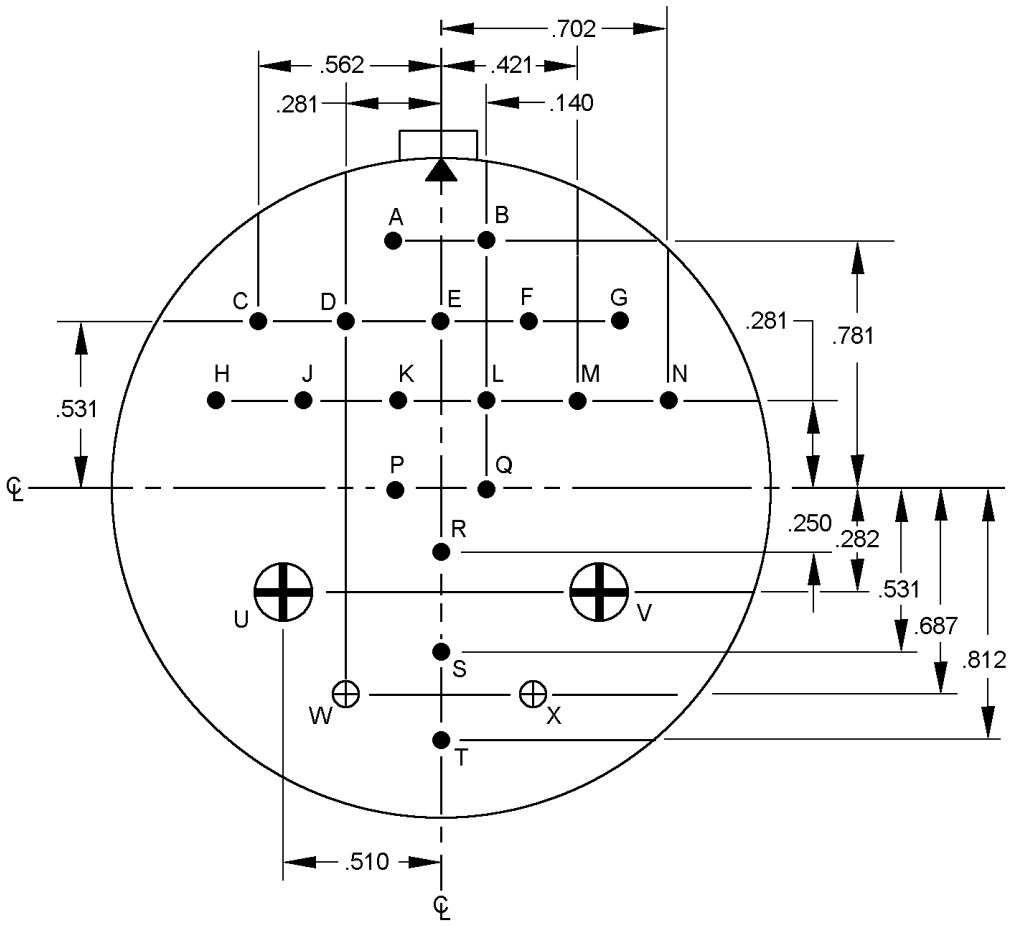

40-7

(Not applicable to MIL-DTL-22992.)

Contacts (Insert arrangement 40-7)		
Contact position identification (ID)	Contact location	
	X-axis (mm)	Y-axis (mm)
A	-.140 (3.56)	+.781 (19.84)
B	+.140 (3.56)	+.781 (19.84)
C	-.562 (14.27)	+.531 (13.49)
D	-.281 (7.14)	+.531 (13.49)
E	+.000 (0.00)	+.531 (13.49)
F	+.281 (7.14)	+.531 (13.49)
G	+.562 (14.27)	+.531 (13.49)
H	-.702 (17.83)	+.281 (7.14)
J	-.421 (10.69)	+.281 (7.14)
K	-.140 (3.56)	+.281 (7.14)

FIGURE 13. Insert arrangement, electrical connector, shell size 40, MIL-DTL-22992, classes C, J and R, MIL-DTL-83723, series II, and SAE-AS50151 – Continued.

Contacts (Insert arrangement 40-7)		
Contact position identification (ID)	Contact location	
	X-axis (mm)	Y-axis (mm)
L	+.140 (3.56)	+.281 (7.14)
M	+.421 (10.69)	+.281 (7.14)
N	+.702 (17.83)	+.281 (7.14)
P	-.140 (3.56)	+.000 (0.00)
Q	+.140 (3.56)	+.000 (0.00)
R	+.000 (0.00)	-.250 (6.35)
S	+.000 (0.00)	-.531 (13.49)
T	+.000 (0.00)	-.812 (20.62)
U	-.510 (12.95)	-.282 (7.16)
V	+.510 (12.95)	-.282 (7.16)
W	-.281 (7.14)	-.687 (17.45)
X	+.281 (7.14)	-.687 (17.45)

Shell size	Arrangement number	Number of contacts	Size contacts	Service rating	Contact location	Supersedes
40	-7	2	12	A	W,X	MS33691-7
		2	0	A	U,V	
		2	16	A	P,Q	
		16	16	D	All others	

Alternate insert positions			
A degrees (A°)			
W	X	Y	Z
80	110	250	280

FIGURE 13. Insert arrangement, electrical connector, shell size 40, MIL-DTL-22992, classes C, J and R, MIL-DTL-83723, series II, and SAE-AS50151 – Continued.

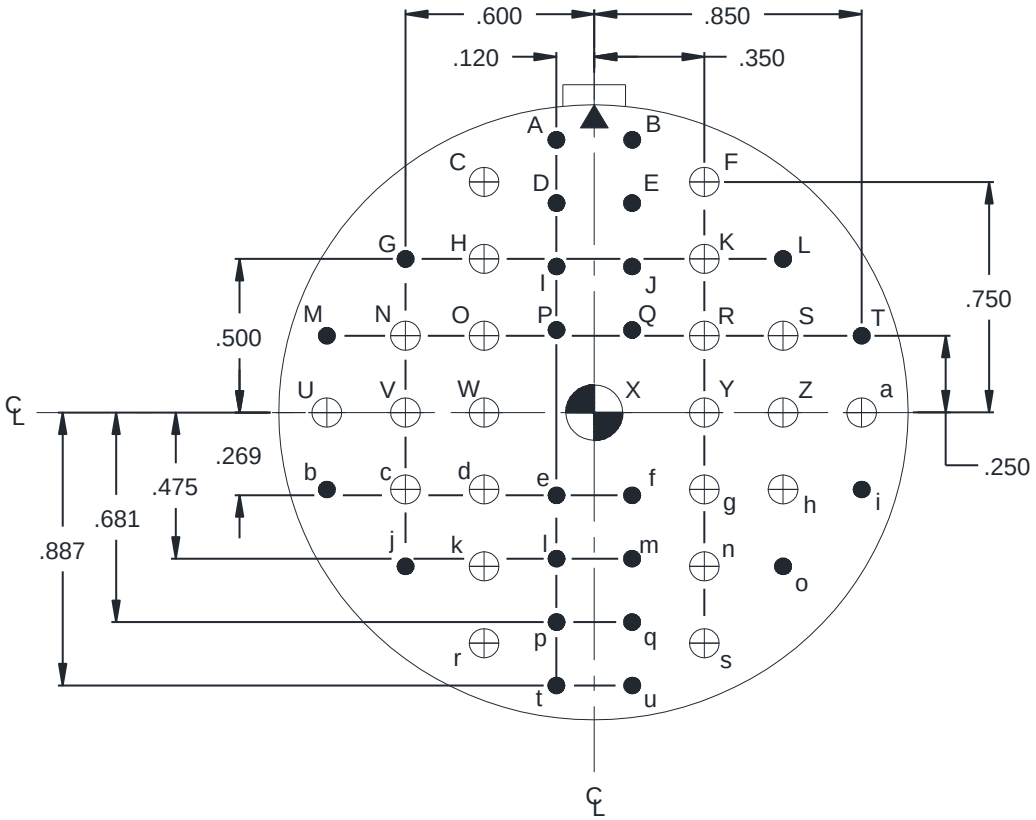

40-9

Contacts (Insert arrangement 40-9)		
Contact position identification (ID)	Contact location	
	X-axis (mm)	Y-axis (mm)
A	-.120 (3.05)	+.887 (22.53)
B	+.120 (3.05)	+.887 (22.53)
C	-.350 (8.89)	+.750 (19.05)
D	-.120 (3.05)	+.681 (17.30)
E	+.120 (3.05)	+.681 (17.30)
F	+.350 (8.89)	+.750 (19.05)
G	-.600 (15.24)	+.500 (12.70)
H	-.350 (8.89)	+.500 (12.70)
I	-.120 (3.05)	+.475 (12.07)
J	+.120 (3.05)	+.475 (12.07)
K	+.350 (8.89)	+.500 (12.70)
L	+.600 (15.24)	+.500 (12.70)
M	-.850 (21.59)	+.250 (6.35)
N	-.600 (15.24)	+.250 (6.35)
O	-.350 (8.89)	+.250 (6.35)

FIGURE 13. Insert arrangement, electrical connector, shell size 40, MIL-DTL-22992, classes C, J and R, MIL-DTL-83723, series II, and SAE-AS50151 – Continued.

Contacts (Insert arrangement 40-9)		
Contact position identification (ID)	Contact location	
	X-axis (mm)	Y-axis (mm)
P	-.120 (3.05)	+.269 (6.83)
Q	+.120 (3.05)	+.269 (6.83)
R	+.350 (8.89)	+.250 (6.35)
S	+.600 (15.24)	+.250 (6.35)
T	+.850 (21.59)	+.250 (6.35)
U	-.850 (21.59)	+.000 (0.00)
V	-.600 (15.24)	+.000 (0.00)
W	-.350 (8.89)	+.000 (0.00)
X	+.000 (0.00)	+.000 (0.00)
Y	+.350 (8.89)	+.000 (0.00)
Z	+.600 (15.24)	+.000 (0.00)
a	+.850 (21.59)	+.000 (0.00)
b	-.850 (21.59)	-.250 (6.35)
c	-.600 (15.24)	-.250 (6.35)
d	-.350 (8.89)	-.250 (6.35)
e	-.120 (3.05)	-.269 (6.83)
f	+.120 (3.05)	-.269 (6.83)
g	+.350 (8.89)	-.250 (6.35)
h	+.600 (15.24)	-.250 (6.35)
i	+.850 (21.59)	-.250 (6.35)
j	-.600 (15.24)	-.500 (12.70)
k	-.350 (8.89)	-.500 (12.70)
l	-.120 (3.05)	-.475 (12.07)
m	+.120 (3.05)	-.475 (12.07)
n	+.350 (8.89)	-.500 (12.70)
o	+.600 (15.24)	-.500 (12.70)
p	-.120 (3.05)	-.681 (17.30)
q	+.120 (3.05)	-.681 (17.30)
r	-.350 (8.89)	-.750 (19.05)
s	+.350 (8.89)	-.750 (19.05)
t	-.120 (3.05)	-.887 (22.53)
u	+.120 (3.05)	-.887 (22.53)

Shell size	Arrangement number	Number of contacts	Size contacts	Service rating	Contact location	Supersedes
40	-9	24	16	A	All others	MS33691-9
		22	12		C,F,H,K,N,O,R,S,U,V,W,Y,Z, a,c,d,g,h,k,n,r,s	
		1	8		X	

Alternate insert positions			
A degrees (A°)			
W	X	Y	Z
65	125	225	310

FIGURE 13. Insert arrangement, electrical connector, shell size 40, MIL-DTL-22992, classes C, J and R, MIL-DTL-83723, series II, and SAE-AS50151 – Continued.

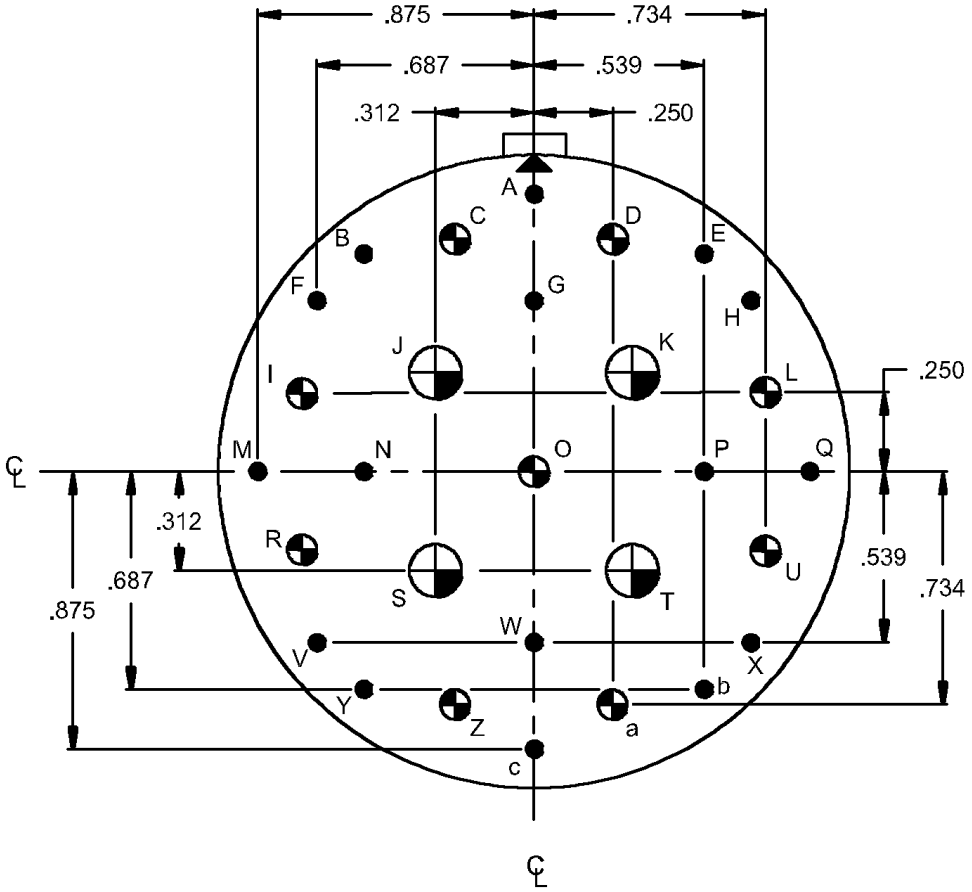

40-10

(Not applicable to MIL-DTL-22992.)

Contacts (Insert arrangement 40-10)		
Contact position identification (ID)	Contact location	
	X-axis (mm)	Y-axis (mm)
A	+.000 (0.00)	+.875 (22.23)
B	-.539 (13.69)	+.687 (17.45)
C	-.250 (6.35)	+.734 (18.64)
D	+.250 (6.35)	+.734 (18.64)
E	+.539 (13.69)	+.687 (17.45)
F	-.687 (17.45)	+.539 (13.69)
G	+.000 (0.00)	+.539 (13.69)
H	+.687 (17.45)	+.539 (13.69)
I	-.734 (18.64)	+.250 (6.35)
J	-.312 (7.92)	+.312 (7.92)
K	+.312 (7.92)	+.312 (7.92)
L	+.734 (18.64)	+.250 (6.35)

FIGURE 13. Insert arrangement, electrical connector, shell size 40, MIL-DTL-22992, classes C, J and R, MIL-DTL-83723, series II, and SAE-AS50151 – Continued.

Contacts (Insert arrangement 40-10)		
Contact position identification (ID)	Contact location	
	X-axis (mm)	Y-axis (mm)
M	-.875 (22.23)	+.000 (0.00)
N	-.539 (13.69)	+.000 (0.00)
O	+.000 (0.00)	+.000 (0.00)
P	+.539 (13.69)	+.000 (0.00)
Q	+.875 (22.23)	+.000 (0.00)
R	-.734 (18.64)	-.250 (6.35)
S	-.312 (7.92)	-.312 (7.92)
T	+.312 (7.92)	-.312 (7.92)
U	+.734 (18.64)	-.250 (6.35)
V	-.687 (17.45)	-.539 (13.69)
W	+.000 (0.00)	-.539 (13.69)
X	+.687 (17.45)	-.539 (13.69)
Y	-.539 (13.69)	-.687 (17.45)
Z	-.250 (6.35)	-.734 (18.64)
a	+.250 (6.35)	-.734 (18.64)
b	+.539 (13.69)	-.687 (17.45)
c	+.000 (0.00)	-.875 (22.23)

Shell size	Arrangement number	Number of contacts	Size contacts	Service rating	Contact location	Supersedes
40	-10	16	16	A	All others	MS33691-10
		9	8	A	C,D,I,L,O,R,U,Z,a	
		4	4	A	J,K,S,T	

Alternate insert positions			
A degrees (A°)			
W	X	Y	Z
65	125	225	310

FIGURE 13. Insert arrangement, electrical connector, shell size 40, MIL-DTL-22992, classes C, J and R, MIL-DTL-83723, series II, and SAE-AS50151 – Continued.

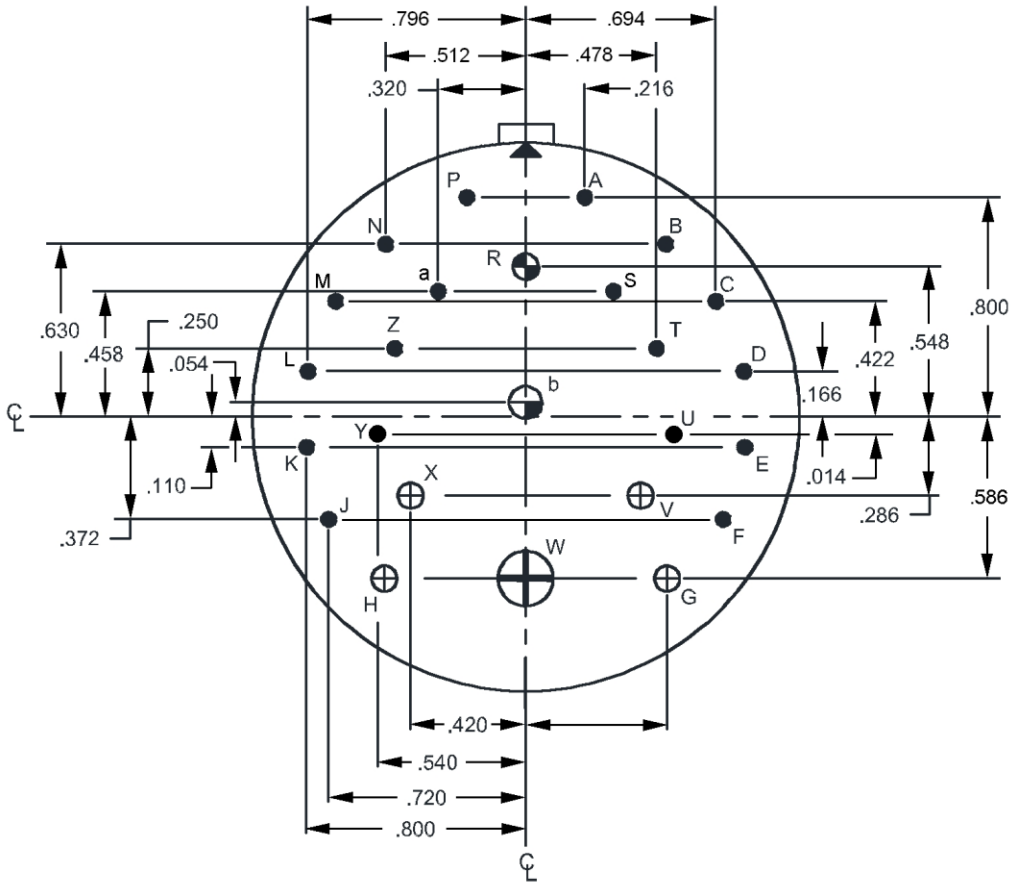

40-11

(Not applicable to MIL-DTL-22992.)

Contacts (Insert arrangement 40-11)		
Contact position identification (ID)	Contact location	
	X-axis (mm)	Y-axis (mm)
A	+.216 (5.49)	+.800 (20.32)
B	+.512 (13.00)	+.630 (16.00)
C	+.694 (17.63)	+.422 (10.72)
D	+.796 (20.22)	+.166 (4.22)
E	+.800 (20.32)	-.110 (2.79)
F	+.720 (18.29)	-.372 (9.45)
G	+.516 (13.11)	-.586 (14.88)
H	-.516 (13.11)	-.586 (14.88)
J	-.720 (18.29)	-.372 (9.45)
K	-.800 (20.32)	-.110 (2.79)
L	-.796 (20.22)	+.166 (4.22)
M	-.694 (17.63)	+.422 (10.72)
N	-.512 (13.00)	+.630 (16.00)

FIGURE 13. Insert arrangement, electrical connector, shell size 40, MIL-DTL-22992, classes C, J and R, MIL-DTL-83723, series II, and SAE-AS50151 – Continued.

Contacts (Insert arrangement 40-11)		
Contact position identification (ID)	Contact location	
	X-axis (mm)	Y-axis (mm)
P	-.216 (5.49)	+.800 (20.32)
R	+.000 (0.00)	+.548 (13.92)
S	+.320 (8.13)	+.458 (11.63)
T	+.478 (12.14)	+.250 (6.35)
U	+.540 (13.72)	-.014 (0.36)
V	+.420 (10.67)	-.286 (7.26)
W	+.000 (0.00)	-.586 (14.88)
X	-.420 (10.67)	-.286 (7.26)
Y	-.540 (13.72)	-.014 (0.36)
Z	-.478 (12.14)	+.250 (6.35)
a	-.320 (8.13)	+.458 (11.63)
b	+.000 (0.00)	+.054 (1.37)

Shell size	Arrangement number	Number of contacts	Size contacts	Service rating	Contact location	Supersedes
40	-11	18	16	D	All others	MS33691-11
		4	12	D	G,H,X,V	
		1	8	D	R	
		1	4	D	b	
		1	0	D	W	

Alternate insert positions			
A degrees (A°)			
W	X	Y	Z
80	110	250	280

FIGURE 13. Insert arrangement, electrical connector, shell size 40, MIL-DTL-22992, classes C, J and R, MIL-DTL-83723, series II, and SAE-AS50151 – Continued.

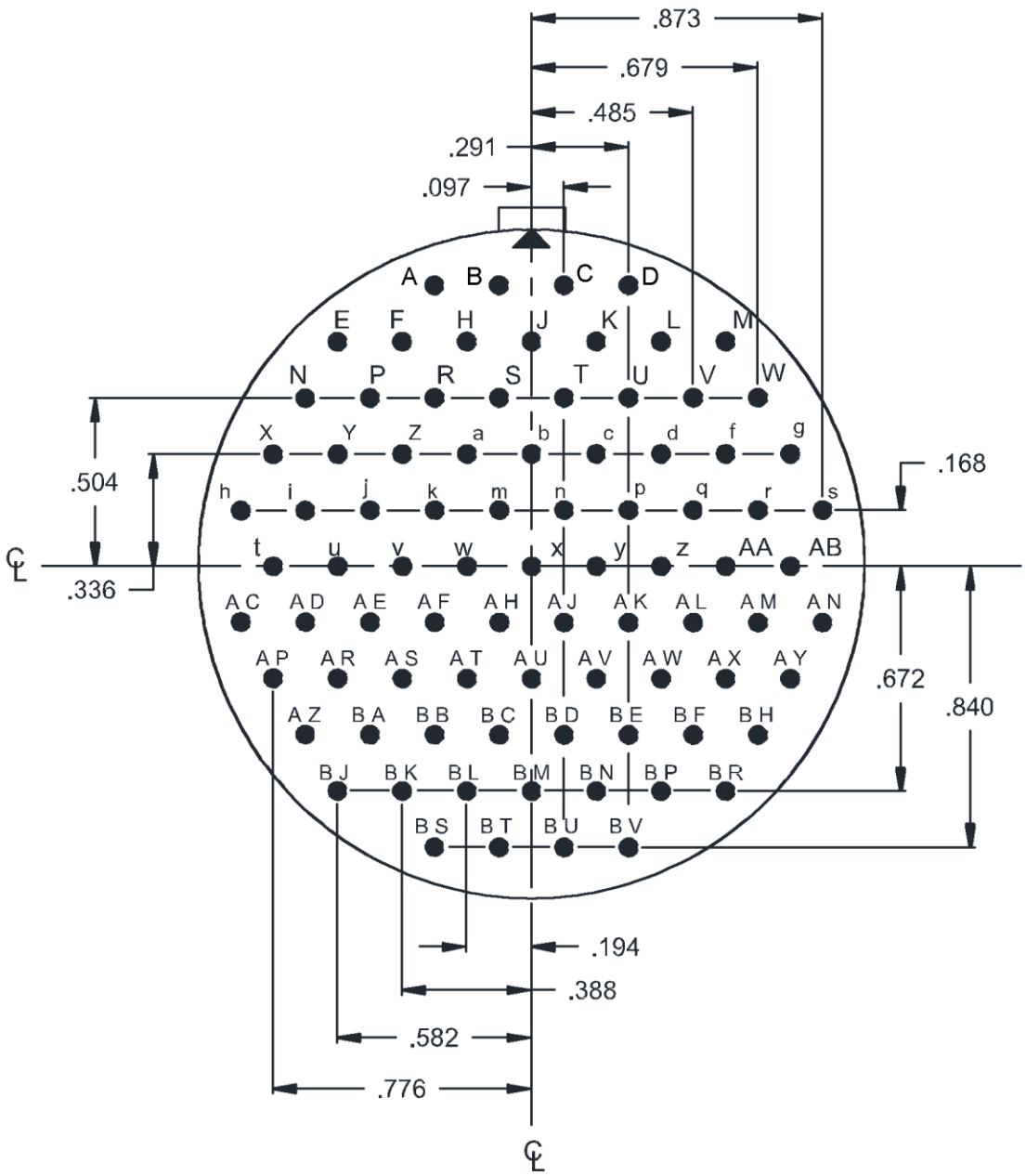

FIGURE 13. Insert arrangement, electrical connector, shell size 40, MIL-DTL-22992, classes C, J and R, MIL-DTL-83723, series II, and SAE-AS50151 – Continued.

Contacts (Insert Arrangement 40-56)		
Contact position identification (ID)	Contact location	
	X-axis (mm)	Y-axis (mm)
A	-.291 (7.39)	+.840 (21.34)
B	-.097 (2.46)	+.840 (21.34)
C	+.097 (2.46)	+.840 (21.34)
D	+.291 (7.39)	+.840 (21.34)
E	-.582 (14.78)	+.672 (17.07)
F	-.388 (9.86)	+.672 (17.07)
H	-.194 (4.93)	+.672 (17.07)
J	+.000 (0.00)	+.672 (17.07)
K	+.194 (4.93)	+.672 (17.07)
L	+.388 (9.86)	+.672 (17.07)
M	+.582 (14.78)	+.672 (17.07)
N	-.679 (17.25)	+.504 (12.80)
P	-.485 (12.32)	+.504 (12.80)
R	-.291 (7.39)	+.504 (12.80)
S	-.097 (2.46)	+.504 (12.80)
T	+.097 (2.46)	+.504 (12.80)
U	+.291 (7.39)	+.504 (12.80)
V	+.485 (12.32)	+.504 (12.80)
W	+.679 (17.25)	+.504 (12.80)
X	-.776 (19.71)	+.336 (8.53)
Y	-.582 (14.78)	+.336 (8.53)
Z	-.388 (9.86)	+.336 (8.53)
a	-.194 (4.93)	+.336 (8.53)
b	+.000 (0.00)	+.336 (8.53)
c	+.194 (4.93)	+.336 (8.53)
d	+.388 (9.86)	+.336 (8.53)
f	+.582 (14.78)	+.336 (8.53)
g	+.776 (19.71)	+.336 (8.53)
h	-.873 (22.17)	+.168 (4.27)
i	-.679 (17.25)	+.168 (4.27)
j	-.485 (12.32)	+.168 (4.27)
k	-.291 (7.39)	+.168 (4.27)
m	-.097 (2.46)	+.168 (4.27)
n	+.097 (2.46)	+.168 (4.27)
p	+.291 (7.39)	+.168 (4.27)
q	+.485 (12.32)	+.168 (4.27)
r	+.679 (17.25)	+.168 (4.27)
s	+.873 (22.17)	+.168 (4.27)
t	-.776 (19.71)	+.000 (0.00)
u	-.582 (14.78)	+.000 (0.00)
v	-.388 (9.86)	+.000 (0.00)
w	-.194 (4.93)	+.000 (0.00)
x	+.000 (0.00)	+.000 (0.00)
y	+.194 (4.93)	+.000 (0.00)
z	+.388 (9.86)	+.000 (0.00)

FIGURE 13. Insert arrangement, electrical connector, shell size 40, MIL-DTL-22992, classes C, J and R, MIL-DTL-83723, series II, and SAE-AS50151 – Continued.

Contacts (Insert Arrangement 40-56)		
Contact position identification (ID)	Contact location	
	X-axis (mm)	Y-axis (mm)
AA	+.582 (14.78)	+.000 (0.00)
AB	+.776 (19.71)	+.000 (0.00)
AC	-.873 (22.17)	-.168 (4.27)
AD	-.679 (17.25)	-.168 (4.27)
AE	-.485 (12.32)	-.168 (4.27)
AF	-.291 (7.39)	-.168 (4.27)
AH	-.097 (2.46)	-.168 (4.27)
AJ	+.097 (2.46)	-.168 (4.27)
AK	+.291 (7.39)	-.168 (4.27)
AL	+.485 (12.32)	-.168 (4.27)
AM	+.679 (17.25)	-.168 (4.27)
AN	+.873 (22.17)	-.168 (4.27)
AP	-.776 (19.71)	-.336 (8.53)
AR	-.582 (14.78)	-.336 (8.53)
AS	-.388 (9.86)	-.336 (8.53)
AT	-.194 (4.93)	-.336 (8.53)
AU	+.000 (0.00)	-.336 (8.53)
AV	+.194 (4.93)	-.336 (8.53)
AW	+.388 (9.86)	-.336 (8.53)
AX	+.582 (14.78)	-.336 (8.53)
AY	+.776 (19.71)	-.336 (8.53)
AZ	-.679 (17.25)	-.504 (12.80)
BA	-.485 (12.32)	-.504 (12.80)
BB	-.291 (7.39)	-.504 (12.80)
BC	-.097 (2.46)	-.504 (12.80)
BD	+.097 (2.46)	-.504 (12.80)
BE	+.291 (7.39)	-.504 (12.80)
BF	+.485 (12.32)	-.504 (12.80)
BH	+.679 (17.25)	-.504 (12.80)
BJ	-.582 (14.78)	-.672 (17.07)
BK	-.388 (9.86)	-.672 (17.07)
BL	-.194 (4.93)	-.672 (17.07)
BM	+.000 (0.00)	-.672 (17.07)
BN	+.194 (4.93)	-.672 (17.07)
BP	+.388 (9.86)	-.672 (17.07)
BR	+.582 (14.78)	-.672 (17.07)
BS	-.291 (7.39)	-.840 (21.34)
BT	-.097 (2.46)	-.840 (21.34)
BU	+.097 (2.46)	-.840 (21.34)
BV	+.291 (7.39)	-.840 (21.34)

FIGURE 13. Insert arrangement, electrical connector, shell size 40, MIL-DTL-22992, classes C, J and R, MIL-DTL-83723, series II, and SAE-AS50151 – Continued.

Insert Arrangement 40-56						
Shell size	Arrangement number	Number of contacts	Size contacts	Service rating	Contact location	Supersedes
40	-56	85	16	A	All	MS33691-56

Alternate insert positions			
A degrees (A°)			
W	X	Y	Z
72	144	216	288

FIGURE 13. Insert arrangement, electrical connector, shell size 40, MIL-DTL-22992, classes C, J and R, MIL-DTL-83723, series II, and SAE-AS50151 – Continued.

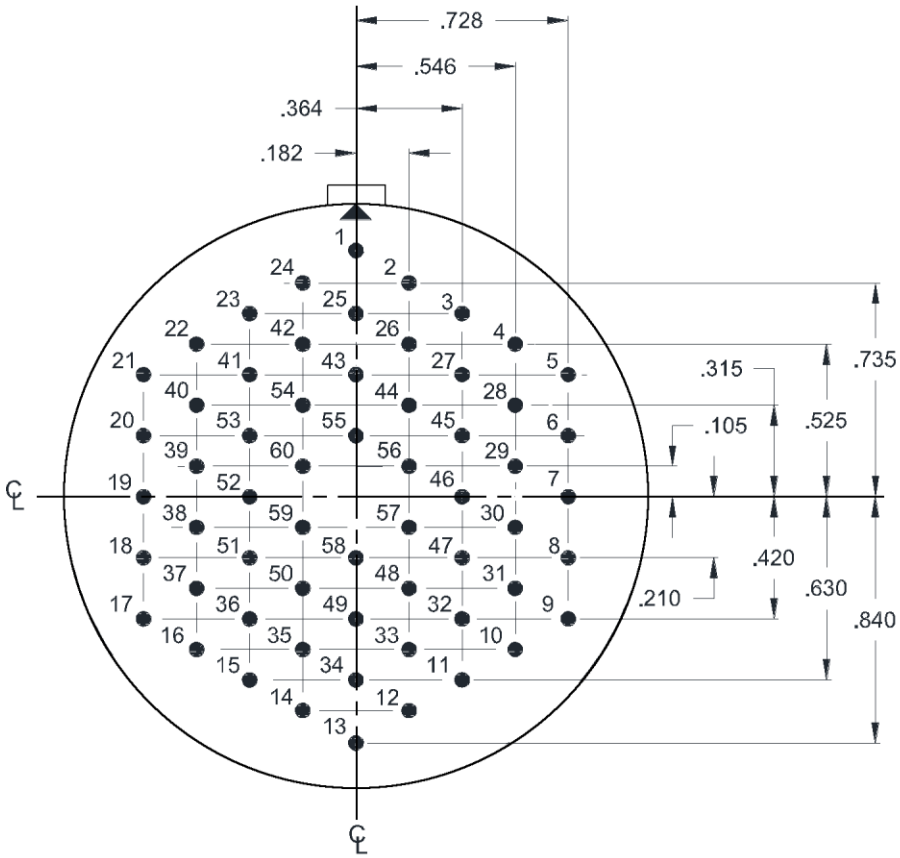

40-62

Contacts (Insert arrangement 40-62)		
Contact position identification (ID)	Contact location	
	X-axis (mm)	Y-axis (mm)
1	+.000 (0.00)	+.840 (21.34)
2	+.182 (4.62)	+.735 (18.67)
3	+.364 (9.25)	+.630 (16.00)
4	+.546 (13.87)	+.525 (13.34)
5	+.728 (18.49)	+.420 (10.67)
6	+.728 (18.49)	+.210 (5.33)
7	+.728 (18.49)	+.000 (0.00)
8	+.728 (18.49)	-.210 (5.33)
9	+.728 (18.49)	-.420 (10.67)
10	+.546 (13.87)	-.525 (13.34)
11	+.364 (9.25)	-.630 (16.00)
12	+.182 (4.62)	-.735 (18.67)
13	+.000 (0.00)	-.840 (21.34)
14	-.182 (4.62)	-.735 (18.67)

FIGURE 13. Insert arrangement, electrical connector, shell size 40, MIL-DTL-22992, classes C, J and R, MIL-DTL-83723, series II, and SAE-AS50151 – Continued.

Contacts (Insert arrangement 40-62)		
Contact position identification (ID)	Contact location	
	X-axis (mm)	Y-axis (mm)
15	-.364 (9.25)	-.630 (16.00)
16	-.546 (13.87)	-.525 (13.34)
17	-.728 (18.49)	-.420 (10.67)
18	-.728 (18.49)	-.210 (5.33)
19	-.728 (18.49)	+.000 (0.00)
20	-.728 (18.49)	+.210 (5.33)
21	-.728 (18.49)	+.420 (10.67)
22	-.546 (13.87)	+.525 (13.34)
23	-.364 9.25)	+.630 (16.00)
24	-.182 (4.62)	+.735 (18.67)
25	+.000 (0.00)	+.630 (16.00)
26	+.182 (4.62)	+.525 (13.34)
27	+.364 (9.25)	+.420 (10.67)
28	+.546 (13.87)	+.315 (8.00)
29	+.546 (13.87)	+.105 (2.67)
30	+.546 (13.87)	-.105 (2.67)
31	+.546 (13.87)	-.315 (8.00)
32	+.364 (9.25)	-.420 (10.67)
33	+.182 (4.62)	-.525 (13.34)
34	+.000 (0.00)	-.630 (16.00)
35	-.182 (4.62)	-.525 (13.34)
36	-.364 (9.25)	-.420 (10.67)
37	-.546 (13.87)	-.315 (8.00)
38	-.546 (13.87)	-.105 (2.67)
39	-.546 (13.87)	+.105 (2.67)
40	-.546 (13.87)	+.315 (8.00)
41	-.364 (9.25)	+.420 (10.67)
42	-.182 (4.62)	+.525 (13.34)
43	+.000 (0.00)	+.420 (10.67)
44	+.182 (4.62)	+.315 (8.00)
45	+.364 (9.25)	+.210 (5.33)
46	+.364 (9.25)	+.000 (0.00)
47	+.364 (9.25)	-.210 (5.33)
48	+.182 (4.62)	-.315 (8.00)
49	+.000 (0.00)	-.420 (10.67)
50	-.182 (4.62)	-.315 (8.00)
51	-.364 (9.25)	-.210 (5.33)
52	-.364 (9.25)	+.000 (0.00)
53	-.364 (9.25)	+.210 (5.33)
54	-.182 (4.62)	+.315 (8.00)
55	+.000 (0.00)	+.210 (5.33)
56	+.182 (4.62)	+.105 (2.67)
57	+.182 (4.62)	-.105 (2.67)
58	+.000 (0.00)	-.210 (5.33)
59	-.182 (4.62)	-.105 (2.67)
60	-.182 (4.62)	+.105 (2.67)

FIGURE 13. Insert arrangement, electrical connector, shell size 40, MIL-DTL-22992, classes C, J and R, MIL-DTL-83723, series II, and SAE-AS50151 – Continued.

Insert arrangement 40-62						
Shell size	Arrangement number	Number of contacts	Size contacts	Service rating	Contact location	Supersedes
40	-62	60	16	A	All	MS33691-62

Alternate insert positions			
A degrees (A°)			
W	X	Y	Z
30	130	220	290

FIGURE 13. Insert arrangement, electrical connector, shell size 40, MIL-DTL-22992, classes C, J and R, MIL-DTL-83723, series II, and SAE-AS50151 – Continued.

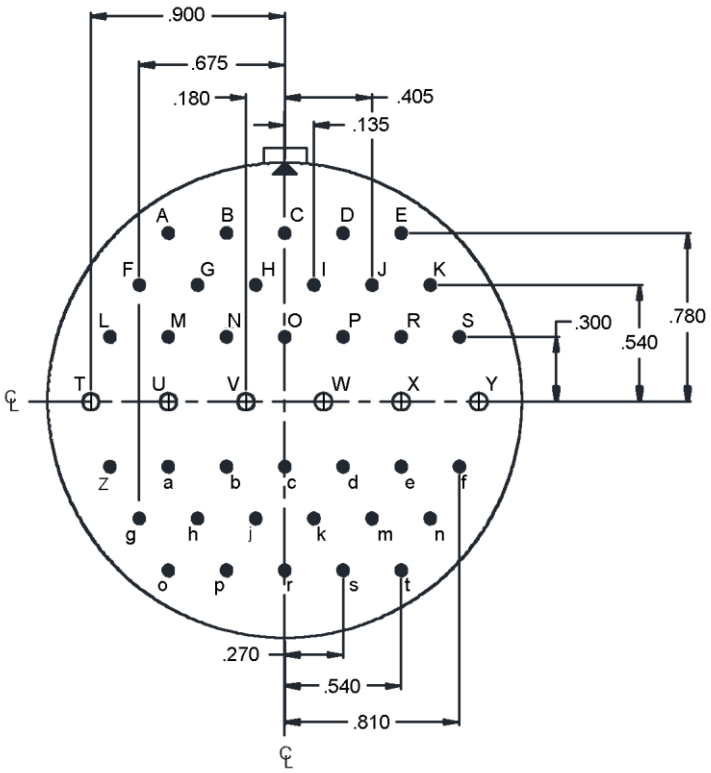

44-1

Contacts (Insert arrangement 44-1)		
Contact position identification (ID)	Contact location	
	X-axis (mm)	Y-axis (mm)
A	-.540 (13.72)	+.780 (19.81)
B	-.270 (6.86)	+.780 (19.81)
C	+.000 (0.00)	+.780 (19.81)
D	+.270 (6.86)	+.780 (19.81)
E	+.540 (13.72)	+.780 (19.81)
F	-.675 (17.15)	+.540 (13.72)
G	-.405 (10.29)	+.540 (13.72)
H	-.135 (3.43)	+.540 (13.72)
I	+.135 (3.43)	+.540 (13.72)
J	+.405 (10.29)	+.540 (13.72)
K	+.675 (17.15)	+.540 (13.72)
L	-.810 (20.57)	+.300 (7.62)
M	-.540 (13.72)	+.300 (7.62)
N	-.270 (6.86)	+.300 (7.62)
O	+.000 (0.00)	+.300 (7.62)

FIGURE 14. Insert arrangement, electrical connector, shell size 44 (MIL-DTL-22992, classes C, J and R, MIL-DTL-83723, series II, and SAE-AS50151 and SAE-AS50151).

Contacts (Insert arrangement 44-1)		
Contact position identification (ID)	Contact location	
	X-axis (mm)	Y-axis (mm)
P	+.270 (6.86)	+.300 (7.62)
R	+.540 (13.72)	+.300 (7.62)
S	+.810 (20.57)	+.300 (7.62)
T	-.900 (22.86)	+.000 (0.00)
U	-.540 (13.72)	+.000 (0.00)
V	-.180 (4.57)	+.000 (0.00)
W	+.180 (4.57)	+.000 (0.00)
X	+.540 (13.72)	+.000 (0.00)
Y	+.900 (22.86)	+.000 (0.00)
Z	-.810 (20.57)	-.300 (7.62)
a	-.540 (13.72)	-.300 (7.62)
b	-.270 (6.86)	-.300 (7.62)
c	+.000 (0.00)	-.300 (7.62)
d	+.270 (6.86)	-.300 (7.62)
e	+.540 (13.72)	-.300 (7.62)
f	+.810 (20.57)	-.300 (7.62)
g	-.675 (17.15)	-.540 (13.72)
h	-.405 (10.29)	-.540 (13.72)
j	-.135 (3.43)	-.540 (13.72)
k	+.135 (3.43)	-.540 (13.72)
m	+.405 (10.29)	-.540 (13.72)
n	+.675 (17.15)	-.540 (13.72)
o	-.540 (13.72)	-.780 (19.81)
p	-.270 (6.86)	-.780 (19.81)
r	+.000 (0.00)	-.780 (19.81)
s	+.270 (6.86)	-.780 (19.81)
t	+.540 (13.72)	-.780 (19.81)

Shell size	Arrangement number	Number of contacts	Size contacts	Service rating	Contact location	Supersedes
44	-1	36	16	D	All others	MS33692-1
		6	12		T,U,V,W,X,Y	

Alternate insert positions			
A degrees (A°)			
W	X	Y	Z
65	125	225	310

FIGURE 14. Insert arrangement, electrical connector, shell size 44 (MIL-DTL-22992, classes C, J and R, MIL-DTL-83723, series II, and SAE-AS50151 and SAE-AS50151).

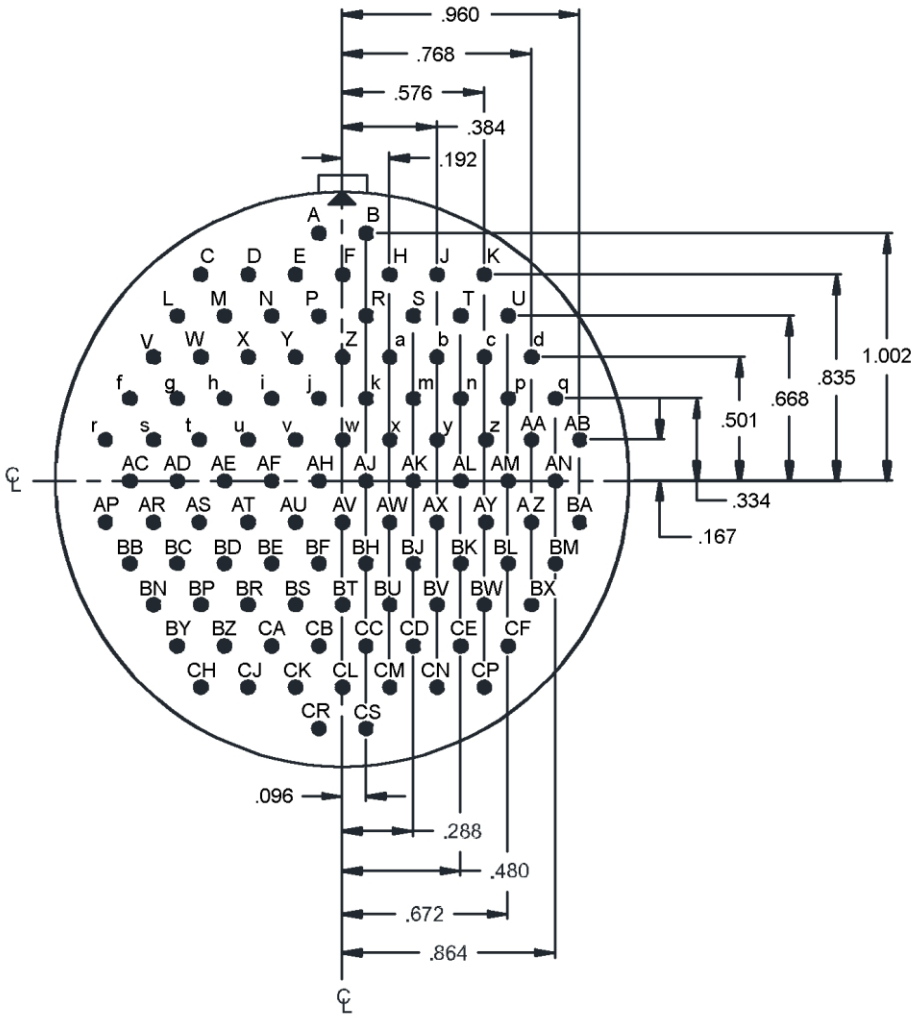

44-52

Contacts (Insert Arrangement 44-52)		
Contact position identification (ID)	Contact location	
	X-axis (mm)	Y-axis (mm)
A	-.096 (2.44)	+1.002 (25.45)
B	+.096 (2.44)	+1.002 (25.45)
C	-.576 (14.63)	+.835 (21.21)
D	-.384 (9.75)	+.835 (21.21)
E	-.192 (4.88)	+.835 (21.21)
F	+.000 (0.00)	+.835 (21.21)
H	+.192 (4.88)	+.835 (21.21)
J	+.384 (9.75)	+.835 (21.21)
K	+.576 (14.63)	+.835 (21.21)
L	-.672 (17.07)	+.668 (16.97)
M	-.480 (12.19)	+.668 (16.97)

FIGURE 14. Insert arrangement, electrical connector, shell size 44 (MIL-DTL-22992, classes C, J and R, MIL-DTL-83723, series II, and SAE-AS50151 and SAE-AS50151).

Contacts (Insert Arrangement 44-52)		
Contact position identification (ID)	Contact location	
	X-axis (mm)	Y-axis (mm)
N	-.288 (7.32)	+.668 (16.97)
P	-.096 (2.44)	+.668 (16.97)
R	+.096 (2.44)	+.668 (16.97)
S	+.288 (7.32)	+.668 (16.97)
T	+.480 (12.19)	+.668 (16.97)
U	+.672 (17.07)	+.668 (16.97)
V	-.768 (19.51)	+.501 (12.73)
W	-.576 (14.63)	+.501 (12.73)
X	-.384 (9.75)	+.501 (12.73)
Y	-.192 (4.88)	+.501 (12.73)
Z	+.000 (0.00)	+.501 (12.73)
a	+.192 (4.88)	+.501 (12.73)
b	+.384 (9.75)	+.501 (12.73)
c	+.576 (14.63)	+.501 (12.73)
d	+.768 (19.51)	+.501 (12.73)
f	-.864 (21.95)	+.334 (8.48)
g	-.672 (17.07)	+.334 (8.48)
h	-.480 (12.19)	+.334 (8.48)
i	-.288 (7.32)	+.334 (8.48)
j	-.096 (2.44)	+.334 (8.48)
k	+.096 (2.44)	+.334 (8.48)
m	+.288 (7.32)	+.334 (8.48)
n	+.480 (12.19)	+.334 (8.48)
p	+.672 (17.07)	+.334 (8.48)
q	+.864 (21.95)	+.334 (8.48)
r	-.960 (24.38)	+.167 (4.24)
s	-.768 (19.51)	+.167 (4.24)
t	-.576 (14.63)	+.167 (4.24)
u	-.384 (9.75)	+.167 (4.24)
v	-.192 (4.88)	+.167 (4.24)
w	+.000 (0.00)	+.167 (4.24)
x	+.192 (4.88)	+.167 (4.24)
y	+.384 (9.75)	+.167 (4.24)
z	+.576 (14.63)	+.167 (4.24)
AA	+.768 (19.51)	+.167 (4.24)
AB	+.960 (24.38)	+.167 (4.24)
AC	-.864 (21.95)	+.000 (0.00)
AD	-.672 (17.07)	+.000 (0.00)
AE	-.480 (12.19)	+.000 (0.00)
AF	-.288 (7.32)	+.000 (0.00)
AH	-.096 (2.44)	+.000 (0.00)
AJ	+.096 (2.44)	+.000 (0.00)
AK	+.288 (7.32)	+.000 (0.00)
AL	+.480 (12.19)	+.000 (0.00)
AM	+.672 (17.07)	+.000 (0.00)

FIGURE 14. Insert arrangement, electrical connector, shell size 44 (MIL-DTL-22992, classes C, J and R, MIL-DTL-83723, series II, and SAE-AS50151 and SAE-AS50151).

Contacts (Insert Arrangement 44-52)		
Contact position identification (ID)	Contact location	
	X-axis (mm)	Y-axis (mm)
AN	+.864 (21.95)	+.000 (0.00)
AP	-.960 (24.38)	-.167 (4.24)
AR	-.768 (19.51)	-.167 (4.24)
AS	-.576 (14.63)	-.167 (4.24)
AT	-.384 (9.75)	-.167 (4.24)
AU	-.192 (4.88)	-.167 (4.24)
AV	+.000 (0.00)	-.167 (4.24)
AW	+.192 (4.88)	-.167 (4.24)
AX	+.384 (9.75)	-.167 (4.24)
AY	+.576 (14.63)	-.167 (4.24)
AZ	+.768 (19.51)	-.167 (4.24)
BA	+.960 (24.38)	-.167 (4.24)
BB	-.864 (21.95)	-.334 (8.46)
BC	-.672 (17.07)	-.334 (8.46)
BD	-.480 (12.19)	-.334 (8.46)
BE	-.288 (7.32)	-.334 (8.46)
BF	-.096 (2.44)	-.334 (8.46)
BH	+.096 (2.44)	-.334 (8.46)
BJ	+.288 (7.32)	-.334 (8.46)
BK	+.480 (12.19)	-.334 (8.46)
BL	+.672 (17.07)	-.334 (8.46)
BM	+.864 (21.95)	-.334 (8.46)
BN	-.768 (19.51)	-.501 (12.73)
BP	-.576 (14.63)	-.501 (12.73)
BR	-.384 (9.75)	-.501 (12.73)
BS	-.192 (4.88)	-.501 (12.73)
BT	+.000 (0.00)	-.501 (12.73)
BU	+.192 (4.88)	-.501 (12.73)
BV	+.384 (9.75)	-.501 (12.73)
BW	+.576 (14.63)	-.501 (12.73)
BX	+.768 (19.51)	-.501 (12.73)
BY	-.672 (17.07)	-.668 (16.97)
BZ	-.480 (12.19)	-.668 (16.97)
CA	-.288 (7.32)	-.668 (16.97)
CB	-.096 (2.44)	-.668 (16.97)
CC	+.096 (2.44)	-.668 (16.97)
CD	+.288 (7.32)	-.668 (16.97)
CE	+.480 (12.19)	-.668 (16.97)
CF	+.672 (17.07)	-.668 (16.97)
CH	-.576 (14.63)	-.835 (21.21)
CJ	-.384 (9.75)	-.835 (21.21)
CK	-.192 (4.88)	-.835 (21.21)
CL	+.000 (0.00)	-.835 (21.21)

FIGURE 14. Insert arrangement, electrical connector, shell size 44 (MIL-DTL-22992, classes C, J and R, MIL-DTL-83723, series II, and SAE-AS50151 and SAE-AS50151).

Contacts (Insert Arrangement 44-52)		
Contact position identification (ID)	Contact location	
	X-axis (mm)	Y-axis (mm)
CM	+.192 (4.88)	-.835 (21.21)
CN	+.384 (9.75)	-.835 (21.21)
CP	+.576 (14.63)	-.835 (21.21)
CR	-.096 (2.44)	-1.002 (25.45)
CS	+.096 (2.44)	-1.002 (25.45)

Shell size	Arrangement number	Number of contacts	Size contacts	Service rating	Contact location	Supersedes
44	-52	104	16	A	All	MS33692-52

Alternate insert positions			
A degrees (A°)			
W	X	Y	Z
72	135	225	288

FIGURE 14. Insert arrangement, electrical connector, shell size 44 (MIL-DTL-22992, classes C, J and R, MIL-DTL-83723, series II, and SAE-AS50151 and SAE-AS50151).

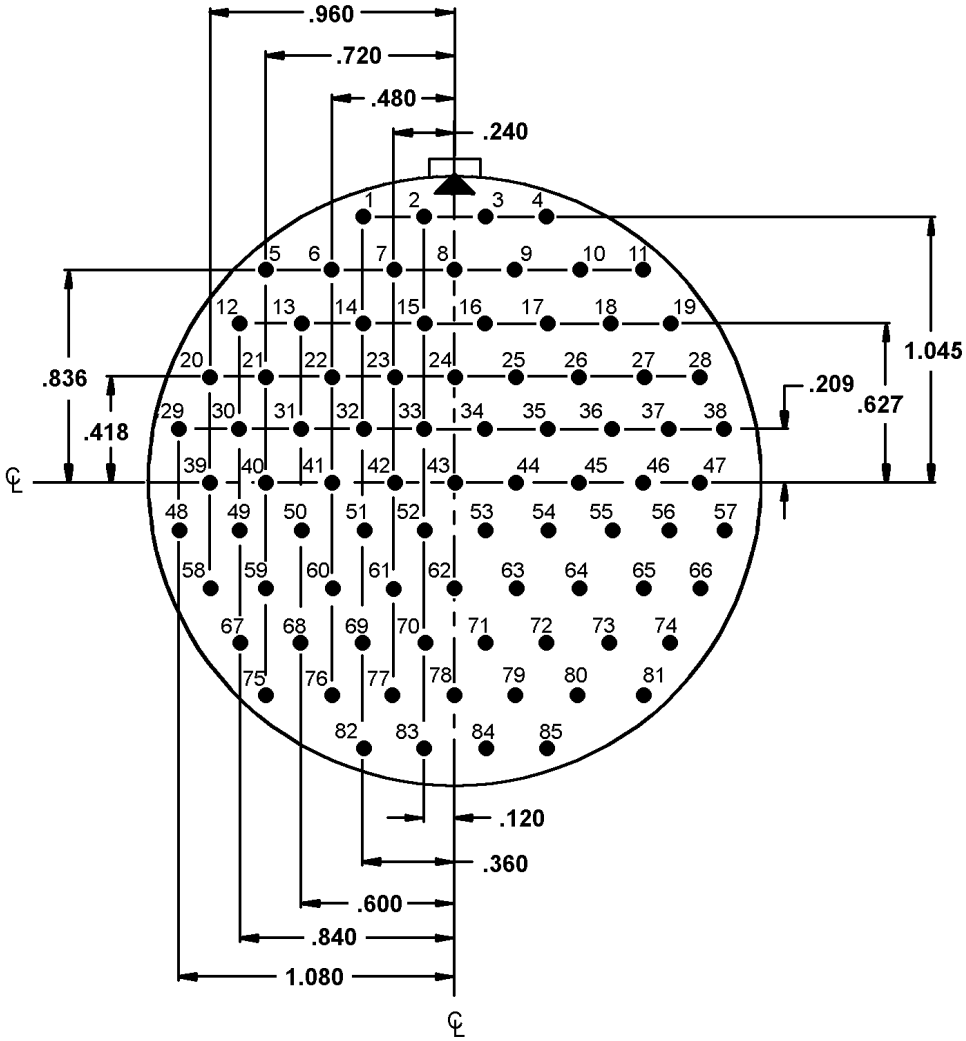

48-62

(Shell size 48 applies to SAE-AS5015 only.)

Contacts (Insert arrangement 48-62)		
Contact position identification (ID)	Contact location	
	X-axis (mm)	Y-axis (mm)
1	-.360 (9.14)	+1.045 (26.54)
2	-.120 (3.05)	+1.045 (26.54)
3	+.120 (3.05)	+1.045 (26.54)
4	+.360 (9.14)	+1.045 (26.54)
5	-.720 (18.29)	+.836 (21.23)
6	-.480 (12.19)	+.836 (21.23)

FIGURE 15. Insert arrangement, electrical connector, shell size 48, SAE-AS50151.

Contacts (Insert arrangement 48-62)		
Contact position identification (ID)	Contact location	
	X-axis (mm)	Y-axis (mm)
7	-.240 (6.10)	+.836 (21.23)
8	+.000 (0.00)	+.836 (21.23)
9	+.240 (6.10)	+.836 (21.23)
10	+.480 (12.19)	+.836 (21.23)
11	+.720 (18.29)	+.836 (21.23)
12	-.840 (21.34)	+.627 (15.93)
13	-.600 (15.24)	+.627 (15.93)
14	-.360 (9.14)	+.627 (15.93)
15	-.120 (3.05)	+.627 (15.93)
16	+.120 (3.05)	+.627 (15.93)
17	+.360 (9.14)	+.627 (15.93)
18	+.600 (15.24)	+.627 (15.93)
19	+.840 (21.34)	+.627 (15.93)
20	-.960 (24.38)	+.418 (10.62)
21	-.720 (18.29)	+.418 (10.62)
22	-.480 (12.19)	+.418 (10.62)
23	-.240 (6.10)	+.418 (10.62)
24	+.000 (0.00)	+.418 (10.62)
25	+.240 (6.10)	+.418 (10.62)
26	+.480 (12.19)	+.418 (10.62)
27	+.720 (18.29)	+.418 (10.62)
28	+.960 (24.38)	+.418 (10.62)
29	-1.080 (27.43)	+.209 (5.31)
30	-.840 (21.34)	+.209 (5.31)
31	-.600 (15.24)	+.209 (5.31)
32	-.360 (9.14)	+.209 (5.31)
33	-.120 (3.05)	+.209 (5.31)
34	+.120 (3.05)	+.209 (5.31)
35	+.360 (9.14)	+.209 (5.31)
36	+.600 (15.24)	+.209 (5.31)
37	+.840 (21.34)	+.209 (5.31)
38	+1.080 (27.43)	+.209 (5.31)
39	-.960 (24.38)	+.000 (0.00)
40	-.720 (18.29)	+.000 (0.00)
41	-.480 (12.19)	+.000 (0.00)
42	-.240 (6.10)	+.000 (0.00)
43	+.000 (0.00)	+.000 (0.00)
44	+.240 (6.10)	+.000 (0.00)
45	+.480 (12.19)	+.000 (0.00)
46	+.720 (18.29)	+.000 (0.00)
47	+.960 (24.38)	+.000 (0.00)
48	-1.080 (27.43)	-.209 (5.31)
49	-.840 (21.34)	-.209 (5.31)
50	-.600 (15.24)	-.209 (5.31)
51	-.360 (9.14)	-.209 (5.31)

FIGURE 15. Insert arrangement, electrical connector, shell size 48, SAE-AS50151.

Contacts (Insert arrangement 48-62)		
Contact position identification (ID)	Contact location	
	X-axis (mm)	X-axis (mm)
52	-.120 (3.05)	-.209 (5.31)
53	+.120 (3.05)	-.209 (5.31)
54	+.360 (9.14)	-.209 (5.31)
55	+.600 (15.24)	-.209 (5.31)
56	+.840 (21.34)	-.209 (5.31)
57	+1.080 (27.43)	-.209 (5.31)
58	-.960 (24.38)	-.418 (10.62)
59	-.720 (18.29)	-.418 (10.62)
60	-.480 (12.19)	-.418 (10.62)
61	-.240 (6.10)	-.418 (10.62)
62	+.000 (0.00)	-.418 (10.62)
63	+.240 (6.10)	-.418 (10.62)
64	+.480 (12.19)	-.418 (10.62)
65	+.720 (18.29)	-.418 (10.62)
66	+.960 (24.38)	-.418 (10.62)
67	-.840 (21.34)	-.627 (15.93)
68	-.600 (15.24)	-.627 (15.93)
69	-.360 (9.14)	-.627 (15.93)
70	-.120 (3.05)	-.627 (15.93)
71	+.120 (3.05)	-.627 (15.93)
72	+.360 (9.14)	-.627 (15.93)
73	+.600 (15.24)	-.627 (15.93)
74	+.840 (21.34)	-.627 (15.93)
75	-.720 (18.29)	-.836 (21.23)
76	-.480 (12.19)	-.836 (21.23)
77	-.240 (6.10)	-.836 (21.23)
78	+.000 (0.00)	-.836 (21.23)
79	+.240 (6.10)	-.836 (21.23)
80	+.480 (12.19)	-.836 (21.23)
81	+.720 (18.29)	-.836 (21.23)
82	-.360 (9.14)	-1.045 (26.54)
83	-.120 (3.05)	-1.045 (26.54)
84	+.120 (3.05)	-1.045 (26.54)
85	+.360 (9.14)	-1.045 (26.54)

Shell size	Arrangement number	Number of contacts	Size contacts	Service rating	Contact location	Supersedes
48	-62	85	16	D	All	MS33693-62

Alternate insert positions			
A degrees (A°)			
W	X	Y	Z
72	144	216	288

FIGURE 15. Insert arrangement, electrical connector, shell size 48, SAE-AS50151.

CONCLUDING MATERIAL

Custodians:
Army – CR
Navy – AS
Air Force – 85
DLA – CC

Preparing activity:
DLA - CC

(Project **5935-2016-146**)

Review activities:
Army – AR
Navy – EC
Air Force – 19, 99

NOTE: The activities listed above were interested in this document as of the date of this document. Since organizations and responsibilities can change, you should verify the currency of the information above using the ASSIST Online database at https://assist.dla.mil.