INCH-POUND
MIL-STD-1285D
w/ CHANGE 1
10 November 2010
SUPERSEDING
MIL-STD-1285D
7 September 2004

DEPARTMENT OF DEFENSE
STANDARD PRACTICE

MARKING OF
ELECTRICAL AND ELECTRONIC PARTS

AMSC N/A

FSC 59GP

FORWARD

1. This standard is approved for use by all Departments and Agencies of the Department of Defense.

2. This standard provides uniform marking requirements for electrical and electronic parts. The requirements that are common to all parts are contained in sections 4 and 5. Individual requirements applicable to specific parts are contained in the appendixes of this standard. These sections are numbered to identify the applicable federal supply class (such as Federal Stock Class (FSC) section 5905 - Resistors).

* 3. Comments, suggestions, or question on this document should be addressed to DLA Land and Maritime, ATTN: VAT, Post Office Box 3990, Columbus, Ohio 43218-3990 or email to resistor@dla.mil. Since contact information can change, you may want to verify the currency of this address information using the ASSIST Online database at https://assist.daps.dla.mil.

* SUMMARY OF CHANGE 1 MODIFICATIONS

1. Foreword change DSCC name to DLA Land and Maritime; also ASSIST online web site has been changed to https://assist.daps.dla.mil.

2. Paragraph 2.2.1 changed the URL for the ASSIST quicksearch web site.

3. Paragraph 2.3, add a Uniform Resource Locator (URL) for all documents sited; delete cancel document "ANSI Y10.5" and add "IEEE 280".

4. Paragraph 2.4, changed to include the words "Unless otherwise noted herein or in the contract".

5. Paragraph 4.3, replaced cancel document "ANSI Y10.5" with superseded document "IEEE 280".

6. Paragraph 6.7 changed "Changes from previous issue" paragraph.

7. Appendix K, paragraph K.2.2.1, changed the URL for the ASSIST quicksearch web site.

8. Appendix K, Section K.2.3, changed to include the words "Unless otherwise noted herein or in the contract".

9. Appendix L, paragraph L.2.2.1, changed the URL for the ASSIST quicksearch web site.

10. Appendix L, Section L.2.3 changed to include the words "Unless otherwise noted herein or in the contract".

11. Appendix N, Title change.

12. Appendix N, paragraph N.2.2.1, changed the URL for the ASSIST quicksearch web site.

13. Appendix N, paragraph N.2.3, add Non-Government publication paragraph.

14. Appendix N, paragraph N.2.4, changed to include the words "Unless otherwise noted herein or in the contract".

15. Appendix N, paragraph N.3.1.1, add "card holders" to existing paragraph.

16. Appendix N, paragraph N.3.1.2, rename paragraph title.

17. Appendix N, paragraph N.3.1.2.1, rewritten paragraph.

18. Appendix N, paragraph N.3.1.2.2, editorial changes.

19. Appendix N, add paragraphs N.3.1.3, N.3.1.4, and N.3.1.4.1.

20. Concluding material, changes "Air Force-11" to "Air Force-85" and the ASSIST quicksearch web site.

21. The following modifications to MIL-STD-1285D have been made:

PARAGRAPH	MODIFICATION
Foreword	Changed
2.2.1	Changed
2.3	Changed
2.4	Changed
4.3	Changed
6.7	Changed
K.2.2.1	Changed
K.2.3	Changed
L.2.2.1	Changed
L.2.3	Changed
Appendix N title	Changed
N.2.2.1	Changed
N.2.3	Added
N.2.4	Changed
N.3.1.1	Changed
N.3.1.2	Renamed
N.3.1.2.1	Changed
N.3.1.2.2	Changed
N.3.1.3	Added
N.3.1.4	Added
N3.1.4.1	Added
Concluding material	Changed

CONTENTS

PARAGRAPH		PAGE
	FORWARD	ii
*	SUMMARY OF CHANGE 1 MODICIATIONS	iii
1.	SCOPE	1
1.1	Scope	1
1.2	Applicability	1
1.3	Classification	1
2.	APPLICABLE DOCUMENTS	2
2.1	General	2
2.2	Government documents	2
2.2.1	Specifications, standards, and handbooks	2
2.2.2	Other Government documents, drawings, and publications	2
2.3	Non-Government publications	3
2.4	Order of precedence	3
3.	DEFINITIONS	4
3.1	Acquisition document	4
3.2	Altered item drawing	4
3.3	Commercial and Government Entity (CAGE)	4
3.4	Commercial item	4
3.5	Commercial Off The Shelf (COTS) products (also referred to as commercial products)	4
3.6	Design activity	4
3.7	Design activity, current	4
3.8	Design activity, identification	4
3.9	Design activity, original	4
3.10	Document	4
3.11	Electrostatic discharge (ESD) sensitive devices	4
3.12	Functional marking	4
3.13	Manufacturer	4
3.14	Manufacturer's identification	4
3.15	NATO supply code for manufacturers (NSCM)	5
3.16	Order of precedence	5
3.17	Part or Identifying Number (PIN)	5
3.18	Part or Identifying Number (PIN) marking	5
3.19	Physical characteristics marking	5
3.20	Selected item drawing	5
3.21	Sequence of markings	5
3.22	Source control drawing	5
3.23	Special characteristics	5
3.24	Specification data	5
3.25	Typographical marking	5
3.26	Vendor item drawing	5
3.27	Warranty	5

CONTENTS

PARAGRAPH		PAGE
4.	GENERAL REQUIREMENTS	6
4.1	General	6
4.2	Marking process	6
4.3	Symbols	6
4.4	Polarity and functional markings	6
4.5	Part identification marking	6
4.5.1	Approved standards marking	6
4.5.2	Approved government specification marking	6
4.5.3	Marking parts acquired from, but not manufactured by, the design activity	6
4.5.4	Marking of altered or selected items	7
4.5.5	Marking of source control items	7
4.5.6	Marking of vendor items	7
4.5.7	Marking of commercial off the shelf (COTS) items	7
4.5.8	Marking of reidentified items	7
4.5.9	Method I (typographical marking)	7
4.5.9.1	Full marking	8
4.5.9.2	Minimum marking	8
4.5.10	Method II (color coding)	8
4.6	Recycled, recovered, or environmentally preferable materials	8
5.	DETAIL REQUIREMENTS	
5.1	Physical characteristics marking	10
5.2	Typographical marking (method I)	10
5.2.1	Identifying number	10
5.2.2	Design activity code	10
5.2.3	“JAN” and "J" marking	10
5.2.3.1	“JAN” and "J" marking (for DoD specifications only)	10
5.2.4	Source code	10
5.2.5	Date code	11
5.2.6	Lot symbol	11
5.2.7	Characteristics and ratings	11
5.2.8	Distributor’s symbol	11
5.3	Color coding (method II)	11
5.3.1	Part	11
5.3.2	Electrical characteristics	11
5.3.3	Other characteristics and ratings	11
5.4	Electrostatic discharge (ESD) sensitive device items	11
5.5	Security classification	12
5.6	Warranted items	12

CONTENTS

PARAGRAPH		PAGE
6.	NOTES	
6.1	Intended use	13
6.2	Acquisition requirements	13
6.3	Permanency and legibility tests	13
6.4	Method I marking	13
6.4.1	Full marking	13
6.4.2	Guidance for acquisition document writers	14
6.4.2.1	Procedures for using the tables for a cylindrical part with dimensions of 0.091 inch (2.31 millimeters) diameter and 0.250 inch (6.35 millimeters) lengths	14
6.4.2.2	Procedures for using the tables for a flat marking surface	14
6.5	Tailoring guidance	15
6.6	Subject term (key word) listing	15
6.7	Changes from previous issue	16

FIGURES		
1.	Method I marking example for approved standards or government specifications	7
2.	ESD sensitive devices attention symbols and labels	12
3.	Example of warranty marking	12
4.	Method I marking example for commercial part	13
5.	Method I marking for source control documents	13
6.	Method I marking for vendor item documents	14
A-1	Circuit diagram and terminal identification FSC (5905)	18
A-2.	Marking of composition type resistors	19
C-1.	Method I marking example for engineering drawing	23
C-2.	Method I marking example for engineering drawing, continued	23
E-1.	Termination identification for multi-phase circuit breakers	25
F-1.	Termination identification	28
H-1.	Symbols and markings for terminals	30
H-2.	Symbols and markings for relay coil terminals	31
H-3.	Symbols and color-codes for lead wire terminals	33
H-4.	Circuit diagram and terminal identification (FSC 5945)	33
I-1.	Examples of typical circuit diagrams	34
I-2.	Typical color-coding of cylindrical coils	36

TABLES		PAGE
I.	Order of precedence for typographical markings	8
II.	Color codes for part identification marking	9
III.	Minimum height required for “N” lines of type	15
IV.	Approximate length required for “N” characters of type	16
A-I.	Characteristic and rating marking requirements (FSC 5905)	18
A-II.	Resistance value designation	19
B-I.	Characteristic and rating marking requirements (FSC 5910)	21
H-I.	Dual coil relay markings	31
I-I.	Rating marking requirements	35

CONTENTS

APPENDIXES

	A	FSC 5905 - Resistors	17
	B	FSC 5910 - Capacitors	20
	C	FSC 5915 - Filters and Networks	22
	D	FSC 5920 - Fuses, Fuseholders, Lightning Arresters, Electrostatic Dischargers, and Telephone Protectors	24
	E	FSC 5925 - Circuit Breakers	25
	F	FSC 5930 - Switches	27
	G	FSC 5935 - Connectors	29
	H	FSC 5945 - Relays	30
	I	FSC 5950 - Coils, Inductors, and Transformers	34
	J	FSC 5955 - Piezoelectric Crystal Units and Ovens	37
	K	FSC 5961 - Semiconductor Devices	39
	L	FSC 5962 - Microelectronic Circuit Devices	43
	M	FSC 5985 - Antennas, Waveguides, and Related Equipment	46
*	N	FSC 5998 - Electrical and Electronic Assemblies, Boards, Cards, and Associated Hardware, Printed Wiring Boards	47
	O	FSC 5999 - Electrical and Electronic components, Miscellaneous Delay Lines	50
		CONCLUDING MATERIAL	51

1. SCOPE

1.1 Scope. This standard establishes requirements for the physical marking of electrical and electronic parts. This standard should be implemented by incorporating suitable requirements directly in acquisition documents.

1.2 Applicability. This standard is intended for Federal Stock Group (FSG) 59 and may be applied in acquisition documents to electrical and electronic parts that are covered by other FSG's (such as panel meters, FSC 6625) if desired. The acquiring activity will evaluate the requirements (sections, paragraphs, or sentences) in this standard to determine the extent to which each requirement can be tailored and be placed on contract in order to impose only the minimum essential needs of the Government. For additional information on application, refer to section 6.

1.3 Classification. Marking of parts will be specified in the acquisition document by the following methods, as applicable.

Method I - Typographical marking
Method II - Color coding

2. APPLICABLE DOCUMENTS

2.1 General. The documents listed in this section are specified in sections 3, 4, and 5 of this standard. This section does not include documents cited in other sections of this standard or recommended for additional information or as examples. While every effort has been made to ensure the completeness of this list, document users are cautioned that they must meet all specified requirements documents cited in sections 3, 4, and 5 of this standard, whether or not they are listed.

2.2 Government documents.

2.2.1 Specifications, standards, and handbooks. The following specifications, standards, and handbooks form a part of this document to the extent specified herein. Unless otherwise specified, the issues of these documents are those cited in the solicitation or contract.

DEPARTMENT OF DEFENSE STANDARDS

MIL-STD-104 - Limits for Electrical Insulation Color.
MIL-STD-129 - Military Marking for Shipment and Storage.
MIL-STD-130 - Identification Marking of U.S. Military Property.
MIL-STD-1686 - Electrostatic Discharge Control Program for Protection of Electrical and Electronic Parts, Assemblies and Equipment (Excluding Electrically Initiated Explosive Devices).

DEPARTMENT OF DEFENSE HANDBOOKS

MIL-HDBK-263 - Electrostatic Discharge Control Handbook for Protection of Electrical and Electronic parts, Assemblies and Equipment (Excluding Electrically Initiated Explosive Devices) (Metric).

* (Copies of the these documents are available online at https://assist.daps.dla.mil/quicksearch/ or from the Standardization Document Order Desk, 700 Robbins Avenue, Building 4D, Philadelphia, PA 19111-5094.)

2.2.2 Other Government documents, drawings, and publications. The following other Government documents, drawings, and publications form a part of this document to the extent specified herein. Unless otherwise specified, the issues are those cited in the solicitation or contract.

H4/H8 Section A - Commercial and Government entity (CAGE) (Name to Code).

* (Copies of these documents are available online at www.dlis.dla.mil/hardcopy.asp or from DLIS-USS Customer Service Office, Defense Logistics Information Service, 74 Washington Avenue N, Suite 7, Battlecreek, MI 49017-3084.)

* 2.3 Non-Government publications. The following documents form a part of this document to the extent specified herein. Unless otherwise specified, the issues of these documents are those cited in the solicitation or contract.

AMERICAN SOCIETY OF MECHANICAL ENGINEERS (ASME)

ASME Y14.100 - Engineer Drawing and Related Documentation Practices.

* (Copies of these documents are available online from www.asme.org or ASME Information Central Order/Inquiries, Post Office Box 2300, Fairfield, NJ 07007-2300.)

ELECTRONIC INDUSTRIES ALLIANCE (EIA)

EIA-359 - EIA Standard Colors for Color Identification and Coding.
EIA-STD-625 - Requirements for Handling Electrostatic-Discharge-Sensitive (ESDS) Devices.

* (Copies of these documents are available online at http://www.eia.org or from the Electronic Industries Alliance, 2500 Wilson Blvd., Arlington, VA 22201.)

* INSTITUTE OF ELECTRICAL AND ELECTRONICS ENGINEERS (IEEE)

IEEE 280 - Electrical Science and Electrical Engineering IEEE Standard Letter Symbols for Quantities Used In.
IEEE 315 - Graphic Symbols for Electrical and Electronic Diagrams.

* (Copies of these documents are available online from www.ieee.org or IEEE, Service Center, 445 Hoes Lane, Piscataway, NJ 08654-1331.)

* 2.4 Order of precedence. Unless otherwise noted herein or in the contract, in the event of a conflict between the text of this document and the references cited herein, the text of this document takes precedence. Nothing in is document, however, supersedes applicable laws and regulations unless a specific exemption has been obtained.

3. DEFINITIONS

3.1 Acquisition document. The Department of Defense specification (including specification sheets, associated specifications, and military sheet form standards), engineering drawing, or specification used for acquisition purposes.

3.2 Altered item drawing. When the physical alteration of an existing item, such as that defined by an existing drawing, specification, or standard is required, the required alteration will be depicted on an altered item drawing.

3.3 Commercial and Government Entity (CAGE). The five-position alpha numeric number assigned to manufacturing and nonmanufacturing organizations that design or manufacture-assemble an item of supply acquired and catalogued by DoD agencies (formerly FSCM, as specified in ASME Y14.100).

3.4 Commercial item. A term which includes both supplies and parts of a class or kind which is regularly used for other than Government purposes and sold or traded in the course of conducting normal business operations.

3.5 Commercial off the shelf (COTS) products (also referred to as commercial products). Products in regular production sold in substantial quantities to the general public or industry at established market or catalog prices.

3.6 Design activity. The activity having responsibility for the designs of an item. It may be a Government activity, contractor, vendor, or other.

3.7 Design activity, current. The activity currently having the responsibility for the design, drawing preparation, and maintenance of the design. Current design activity could be the original design activity or a new activity that accepted transfer of responsibility from another Government activity or contractor.

3.8 Design activity, identification. The design activity's CAGE (see 3.3) or NATO Supply Code for Manufacturers (NSCM) (see 3.15).

3.9 Design activity, original. The activity that had original responsibility for the design of an item and whose drawing number and CAGE code appear in the title block of the drawing.

3.10 Document. The specifications, drawings, lists, standards, pamphlets, reports, or other information (printed or typewritten) relating to the design, acquisition, manufacture, test, or inspection of items under the contract.

3.11 Electrostatic discharge (ESD) sensitive devices. Electronic parts having highly sensitive characteristics and delicate, miniaturized construction which are susceptible to damage or degradation, in various degrees, from environmental field forces (electrostatic, electromagnetic, magnetic, or radioactive). This susceptibility also extends to the standard electronic modules, printed circuit boards, printed wiring boards and circuit card assemblies containing one or more of these sensitive electronic parts.

3.12 Functional marking. The symbols, letters, numbers, and similar marking applied to indicate polarity, circuitry, and similar functional characteristics.

3.13 Manufacturer. A person or firm who owns or leases and operates a factory or establishment that produces (on the premises) materials, supplies, articles, or equipment required under the contract (or for the general character described by the specifications, standards, and publications).

3.14 Manufacturer's identification. The actual manufacturer's name, CAGE (see 3.3), or NSCM (see 3.15) that identifies the place of manufacture.

3.15 NATO supply code for manufacturers (NSCM). The five position alpha numeric code that is assigned to an organization entity, located in a country other than the United States or Canada, that maintains design control or is a source of supply for items acquired by agencies of the Federal Government, NATO member nations, and other participating friendly Governments (as specified in Cataloging Handbook H4/H8).

3.16 Order of precedence. The priority for selecting markings when minimum marking is specified.

3.17 Part or Identifying Number (PIN). The number used to identify an item. It is assigned by the design activity whose engineering drawings, specifications, standards, and inspection requirements control the design of the item. It may be a specification, drawing, part, model, type, or catalog number depending on the numbering system of the design activity.

3.18 Part or Identifying Number (PIN) marking. The typographical marking (method I) or color coding (method II) to be applied to the part, tag, label, or unit package to identify the part.

3.19 Physical characteristics marking. The symbols, letters, numbers, color codes, and similar markings applied to indicate terminals, leads, and similar physical characteristics.

3.20 Selected item drawing. Tightened or redefined acceptance criteria, such as selection for fit, reliability requirements, or limits within the capability range of existing items such as that depicted on an existing drawing, specification, or standard, will be delineated on a selected item drawing.

3.21 Sequence of markings. The order for specifying the physical location of markings selected in accordance with the order of precedence.

3.22 Source control drawing. A source control drawing depicts an existing commercial or vendor item which exclusively provides the performance, installation, and interchangeable characteristics required for one or more specific critical applications.

3.23 Special characteristics. The pertinent rating, operating characteristics, and other information necessary for the identification of the item.

3.24 Specification data. Information such as specification number, type, grade, class, or other identifying data.

3.25 Typographical marking. The marking of the part with printed letter or number characters.

3.26 Vendor item drawing. A vendor item drawing depicts an existing commercial item or vendor-developed item advertised or catalogued as available on an unrestricted basis on order as an “off-the-shelf” item or an item while not commercially available, is acquirable on order from a specified segment of an industry.

3.27 Warranty. A warranty is the contractual agreement between the Government and the contractor relative to the nature, usefulness, or condition of the item(s) furnished under the contract. Warranty duration is expressed in terms of hours, days, months, and number of operations. Warranty markings give notice to a user whether the item(s) is subject to the warrant provisions.

4. GENERAL REQUIREMENTS

4.1 General. Functional and part identification marking shall be applied in the location specified in the acquisition document. Where size, surface condition, or other design considerations will not allow marking in accordance with either method I or II, the acquisition document shall specify the method of application (unit package, tag, or label), and the exact marking requirements. Special marking (caution warnings, radioactive) also shall be as specified in the acquisition document. Identification and marking requirements shall be in accordance with sections 4 and 5 of this standard, the applicable FSC section of this standard, and the peculiarities as included in the acquisition document. In the event of conflict between this standard and an acquisition document, the acquisition document shall govern. In the event of conflict between sections 4 and 5 and the requirements of the appendixes, the appendixes shall have precedence.

4.2 Marking process. Any marking process that will not adversely affect the function of the finished part may be used. Any tags used shall have all burrs and rough edges removed. In addition:

a. Marking shall remain legible following completion of all inspections specified in the acquisition document for the normal life expectancy of the part (see 6.3).

b. Marking materials shall be nonfading.

c. Paper labels for attachment to parts shall not be used.

* 4.3 Symbols. Symbols used in functional and part identification marking shall be in accordance with IEEE 280 or IEEE 315.

4.4 Polarity and functional markings. Parts having polarized or other functional characteristics shall always be marked with a polarity symbol or indicators for special flow direction, rotation direction, and connections, as specified in the acquisition document. These markings, as applicable, take precedence over all other marking.

4.5 Part identification marking. Each part shall be marked in accordance with the full marking or minimum marking requirements stated herein, as specified in the acquisition document. Any other markings that may be applied to the part shall not interfere with, obscure, or confuse those specifications specified herein.

4.5.1 Approved standards marking (see ASME Y14.100). An item covered by an approved standard and used without alteration or selection shall be identified by the standard PIN (such as MS number for Department of Defense specification sheets, see figure 1).

4.5.2 Approved government specification marking (see ASME Y14.100). An item covered by an approved government specification containing a part identification system and used without alteration shall be identified by that part identification (see figure 1).

4.5.3 Marking parts acquired from, but not manufactured by, the design activity (see MIL-STD-130). When the design activity uses subcontractors for the manufacture of an item, but retains full design control, quality assurance control, and full responsibility to the acquiring activity for the delivered product, only the design activity's CAGE code is required as part of the identifying number. If design control, quality control, or delivered product warranty responsibility is delegated to such subcontractor, then both the design activities and the subcontractor's CAGE codes are required to be marked on the item.

RER65F1001M	M39XXX/1-1406L	- Identifying number
JAN ZZZ	JAN ZZZ	- “JAN” brand and trademark
12345 0433A	12345 0433A	- Source code; date code; lot symbol
1,000Ω ±1%	140 μF ±5% 6 V	- Characteristics and ratings
	XXXXXXXX	- ESD symbol if required

FIGURE 1. Method I marking example for approved standards or government specifications (see 4.5.1 and 4.5.2).

4.5.4 Marking of altered or selected items (see ASME Y14.100). Items which are altered or selected from the controlling specification or standard shall be identified by CAGE code and a part number established by the using design activity drawing which depicts requirements for such alterations or selection.

4.5.5 Marking of source control items (see MIL-STD-130). When marking of source control items, they shall be marked with the design activity’s CAGE or NSCM code, the source control notation (SOCN), and the source control part number; (such as, 12345SOCN80678932). The vendor’s CAGE code and identifying number need not be removed.

4.5.6 Marking of vendor items (see MIL-STD-130). When marking vendor items, they shall be marked with the manufacturer’s (vendor’s) PIN preceded by the manufacturer’s CAGE or NSCM code. The vendor drawing number shall not be used to physically reidentify the item from the original design activity’s PIN, in the event that a vendor item is a commercial off the shelf (COTS) item, as specified in 4.5.7.

4.5.7 Marking of commercial off the shelf (COTS) items (see MIL-STD-130). COTS items marked with commercial identification and which present no identification difficulty may be exempt from additional marking requirements unless otherwise specified by contract or order. This exemption extends to vendor items identified as COTS.

4.5.8 Marking of reidentified items (see ASME Y14.100). When items are identified by more than 15 characters (not including the CAGE or NSCM code), or do not meet the other requirements of ASME Y14.100 and a design activity has no control over this assignment, it may assign a design activity control number to the item to meet the identification requirements of that standard (NOTE: DoD specifications that are authorized to exceed the 15 digit limitations are exempt from this requirement).

4.5.9 Method I (typographical marking). The applicable markings of table I shall be individually marked on the part or unit package where necessary. Letters shall be without serifs (sans-serifs) such as Gothic of Futura capitals, and the numeral shall be Arabic except when Roman numerals are used for type designation in DoD specifications and standards. Characters generated by automation techniques (such as interactive graphic systems or stencil) are permitted. Numbers, symbols, trademarks, and other like markings shall be similar in appearance and size to the lettering. When marking processes include the use of marking materials such as inks or paints, these materials shall contrast with the body color of the part to insure legibility. The acquisition document shall specify the sequence and division of line spacing of marking based on the order of precedence specified in table I. However, the sequence may deviate from the order of precedence to accommodate the part configuration and peculiarities of identification marking.

TABLE I. Order of precedence for typographical markings.

Markings 1/ 2/	Order of precedence		
	Department of Defense specification		Engineering drawing or equipment contractor prepared specifications
	Non-ER	ER 3/	
ESD symbol (see 5.4) 4/	1	1	1
Identifying number (see 5.2.1)	2	2	2
Design activity code (see 5.2.2.)	N/A	N/A	3
"JAN" brand (see 5.2.3)	3	3	N/A
Source code (see 5.2.4) 4/	4	4	4
Date code (see 5.2.5)	5	6	5
Lot symbol (see 5.2.6)	6	7	6
Characteristics and ratings (see 5.2.7)	7	8	7
Distributor's symbol (see 5.2.8)	N/A	5	N/A

1/ See 4.4.

2/ Applicable to tube, semiconductor, microcircuit, and DoD ER specifications and other non-ER Department of Defense specifications that have provisions for "JAN" brand marking.

3/ As specified in DoD specifications.

4/ Applies to devices that are subject to damage or destruction by improper handling or storage.

4.5.9.1 Full marking. Unless otherwise specified in the acquisition document (see 4.5.9.2), all of the markings listed in table I shall be marked on the part (see 6.4).

4.5.9.2 Minimum marking. Where size, surface condition, or other design considerations will not allow full marking on the part (see 6.4.1), the acquisition document shall specify the markings for each part in accordance with table I.

4.5.10 Method II (color coding). When method II is specified in the acquisition document, color codes for part identification shall conform to table II. The standard colors shown in table II shall conform within the preferred limits of the centroid colors as specified in EIA-359. The full marking as specified in 4.5.9.1 shall be marked on the unit package.

4.6 Recycled, recovered, or environmentally preferable materials. Recycled, recovered, or environmentally preferable materials should be used to the maximum extent possible provided that the material meets or exceeds the operational and maintenance requirements, and promotes economically advantageous life cycle costs.

TABLE II. Color codes for part identification marking.

Color	Values for significant figures for color bands or dots				
	Electrical characteristic			Tolerance value 4th code 3/	Product level designator symbol 5th code 4/
	1st code number 1/	2nd code number 1/	3rd code multiplier 2/		
Blk	0	0	1	5/ ±20%	C 6/
Brn	1	1	10	±1%	M(1%/1000)
Red	2	2	100	±2%	P(.1%/1000)
Orn	3	3	1,000		R(.01%/1000)
Yel	4	4	10,000		S(.001%/1000)
Grn	5	5	100,000		
Blu	6	6	1,000,000		
Vio	7	7	10,000,000		
Gra	8	8			
Wht	9	9			
Gld			7/ 0.1	±5%	
Sil			7/ 0.01	±10%	

1/ Unless other specified in the acquisition document, the first two code elements shall represent the first and second digits of the electrical characteristic value.

2/ Except as specified in Appendix I, the third code element shall represent the factor by which the two digits are to be multiplied to complete the characteristics value identification.

3/ The tolerance value shall be identified by one code element as shown in table II.

4/ The product level designator symbol shall be identified by the last code element. (NOTE: This identification marking shall be applied only when authorized by DoD specifications.)

5/ Body color shall indicate the tolerance for coils.

6/ Value as specified in the acquisition document.

7/ Not applicable to coils (see Appendix I).

5. DETAILED REQUIREMENTS

5.1 Physical characteristics marking. Physical characteristics marking shall be as specified in the acquisition document. When color coding is required to identify “numbered” terminals, the colors shall conform to color subcolumn of table II. When the electrical insulation of terminal leads is color coded to identify “numbered” terminals, the colors shall be in accordance with MIL-STD-104.

5.2 Typographical marking (method I). When method I marking is specified in the acquisition document, the general and detailed requirements shall be as specified herein.

5.2.1 Identifying number. The identifying number shall be as specified in the acquisition document. The identifying number may be a part number as specified in DoD specification and ASME Y14.100, a type number (such as 1N2100W or F-1A), or a type designation (such as RNR50C1050FM), or a number identifying a definitive acquisition document which specifies the requirements for the part and the applicable CAGE codes of the manufacturer and design activity. All parts may be marked with a logo, in lieu of the CAGE code, if the product specification or contract so determines they are too small to be marked with a CAGE code.

5.2.2 Design activity code. The design activity CAGE code is part of the item identification number and where the manufacturer is not the design activity, both CAGE codes are required on the item except for DoD specification or approved standards parts (see 6.4). If the CAGE code and the part number are applied on one line, a dash or virgule shall separate the number from the code.

5.2.3 “JAN” and “J” marking. The “JAN” and “J” shall be applied only to parts when authorized by a DoD specification.

5.2.3.1 “JAN” and “J” marking (for DoD specifications only). The United States Government has adopted, and is exercising legitimate control over the certification marks “JAN” and “J”, respectively, to indicate that items so marked or identified are manufactured to, and meet all the requirements of specifications. Accordingly, items acquired to, and meeting all of the criteria specified herein and in applicable specifications shall bear the certification mark “JAN” except that items too small to bear the certification mark “JAN” shall bear the letter “J”. The “JAN” or “J” shall be placed immediately before the part number except that if such location would place a hardship on the manufacturer in connection with such marking, the “JAN” or “J” may be located on the first line above or below the part number. Items furnished under contracts or orders which either permit or require deviation from the conditions or requirements specified herein or in applicable specification shall not bear “JAN” or “J”. In the event an item fails to meet the requirements of this specification and the applicable specification sheets or associated specification, the manufacturer shall remove completely the military part number and the “JAN” or the “J” from the sample tested and also from all items represented by the sample. The “JAN” or “J” certification mark shall not be used on products acquired to contractor drawing or specifications. The United States Government has obtained Certificate of Registration Number 504,860 for the certification mark “JAN” and Registration Number 1,586,261 for the certification mark “J”.

5.2.4 Source code. The source code shall identify the manufacturer’s plant where the specified conformance inspection is performed, or where design and verification responsibility and control is exercised, and shall be the five-digit alpha numeric number assigned in accordance with Cataloging Handbook H4/H8.

5.2.5 Date code. A four-digit number shall identify the date of the inspection lot and shall be in accordance with the following:

a. Year: The first two digits shall correspond to the last two digits of the calendar year.

b. Week: The last two digits shall indicate the week of the calendar year. If only one number is required to indicate the week, it shall be preceded by a zero. The first week shall be considered the week in which the first Thursday of the year falls. It is possible that a calendar year may have 53 production weeks, if so the 53rd week shall be marked as 53. The first day of the week shall be considered Sunday.

5.2.6 Lot symbol. Where a lot symbol is required by the acquisition document, a single letter shall be used to identify a production lot. The letters shall be assigned alphabetically; however, letters “I”, “O”, “Q”, “S”, and “U” shall not be used. Where a single letter lot symbols do not cover the number of lots produced, double letters (such as AA, BB,.. AB, AC,... BA) shall be used.

5.2.7 Characteristics and ratings. Characteristics and ratings shall be as specified in the acquisition document.

5.2.8 Distributor’s symbol. The distributor’s symbol may be marked on the part only when authorized by the manufacturer of the part.

5.3 Color coding (method II). When method II marking is applicable, requirements shall be specified in the acquisition document. Color codes for part identification marking shall be as specified in table II. Requirements shall be coded by using dots or bands as specified in the acquisition document.

5.3.1 Part. Certain parts shown in table II shall be identified as such by a single dot or band. This code element, which has no numerical or functional significance, shall be twice the width or diameter of all other code elements and shall simply signify that it is a particular kind of a part. This first code element shall determine from which direction to read the significant code elements. When specified in the acquisition document, the code element also shall indicate polarity or other terminal identification.

5.3.2 Electrical characteristics. Functional designations used to denote electrical characteristics, such as resistance, capacitance, and inductance shall be as specified in table II, unless otherwise specified in the FSC section.

5.3.3 Other characteristics and ratings. Other characteristics and ratings shall be as specified in the acquisition document.

5.4 Electrostatic discharge (ESD) sensitive device items.

a. Electrical and electronic parts classified as sensitive to damage from electrostatic discharge in accordance with MIL-STD-1686 or EIA-STD-625 (as specified in each specification) and MIL-HDBK-263 shall be marked in accordance with the ESD symbol (see figure 2).

b. Assemblies containing ESD parts shall be marked with the ESD symbol. This symbol shall be so located as to be readily visible when the assembly is installed in its next higher assembly, if applicable. When the physical size of the assembly precludes direct marking of the ESD symbol, the assembly shall be marked on an identification tag and attached securely to the assembly. The ESD unit pack shall be marked in accordance with MIL-STD-129.

Unit pack symbol/label

Exterior and intermediate container label

FIGURE 2. ESD sensitive devices attention symbols and labels.

5.5 Security classification. When required by contract or purchase order, classified items shall be marked in a conspicuous manner to provide notice that the item(s) are subject to security restrictions.

5.6 Warranted items. When specifically required by a contract statement of work or other contract clause, warranted items shall be marked in a conspicuous location to give notice that the item(s) are subject to warranty. The marking shall contain, as a minimum, the statement "WARRANTED ITEM" and the period or conditions of the warranty (such as hours of operation, cycles of operation, time since manufactured) (see figure 3).

WARRANTED ITEM

This item is under warranty
until _____1_____

WARRANTED ITEM

This item is under warranty
until _____2_____

1. Indicates expiration date.
2. Indicates condition of use (such as hours of operation, time since manufacture).

NOTE: These examples are provided as a guide only and should not be considered mandatory.

FIGURE 3. Example of warranty marking.

6. NOTES

(This section contains information of a general or explanatory nature that may be helpful, but is not mandatory.)

6.1 Intended use. Documents conforming to the requirements of this standard are intended for use as DoD standardization documents and are listed in ASSIST. The purpose of this standard is to establish a common format throughout the DoD for the marking of electrical and electronic parts.

6.2 Acquisition requirements. Acquisition documents should specify the following:

a. Title, number, and date of the standard.

6.3 Permanency and legibility tests. For the purpose of inspecting for permanency and legibility for marking (see 4.2a), the following test methods are recommended for inclusion in the acquisition document:

a. Method 215 of MIL-STD-202, “Test Methods for Electronic and Electrical Component Parts.”

b. Method 1022 of MIL-STD-750, “Test Methods for Semiconductor Devices.”

c.. Method 2015 of MIL-STD-883, ”Test Methods Standard, Microcircuits.”

6.4 Method I marking.

6.4.1 Full marking. Figures 1, 4, 5, and 6 show examples of method I marking requirements applied in full. These examples are given only as guides and are not to be considered mandatory.

68094-XXXXX-X	- Design activity CAGE code and identifying number
ZZZ	- Trademark
12345 0433A	- Source code; date code; and lot symbol
140 μF ±5% 6 V	- Characteristics and ratings
XXXXXXXX	- ESD symbol if required

FIGURE 4. Method I marking example for commercial parts.

68094SOCNXXXXXX	- Design activity CAGE code and manufacturer’s identifying part number
ZZZ	- Trademark
0433A	- Date code and lot symbol
140 μF ±5% 6 V	- Characteristics and ratings
XXXXXXXX	- ESD symbol if required

FIGURE 5. Method I marking for source control documents.

12345-80678932	- Manufacturer's CAGE code and manufacturer's identifying part number
ZZZ	- Trademark
0433A	- Date code and lot symbol
140 μF ±5% 6 V	- Characteristics and ratings
XXXXXXXX	- ESD symbol if required

FIGURE 6. Method I marking example for vendor item control documents.

6.4.2 Guidance for acquisition document writers. An acquisition document writer can determine how much of the method I marking can be specified as follows:

a. Measure the diameter and the length of the part (using the minimum dimensions) and calculate the circumference to three decimal places (two decimal places if metric units are used) by using the formula:

Circumference = diameter (multiplied by) 3.14
(inches) (inches)

or

Circumference = circumference (multiplied by) 25.4
(millimeters) (inches)

b. Select the size of type and the corresponding number of lines that can be marked within a given marking surface using table III.

c. Find the number of characters for each line from table IV. (NOTE: A space is to be counted as a character.)

6.4.2.1 Procedures for using the tables for a cylindrical part with dimensions of 0.091 inch (2.31 millimeters) diameter and 0.250 inch (6.35 millimeters) lengths.

a. Calculate the circumference as:

Circumference = 0.091 x 3.14 = 0.285 inch

or

Circumference = 0.285 x 25.4 = 7.25 millimeters

b. In table III, find the number equal to or slightly less than .284 (such as, .284 or .278). Opposite this number at the top of the column is the type size (the type size is 4-point (mini) for .284 and 8-point for .278). In the left-hand vertical column opposite this number, find the number of lines that can be marked on the part. For the 4-point (mini) type, the number is 4; and for the 8-point type, the number is 2.

c. In the 4-point (mini) type column of table IV, find the specified part length (.250). If this exact number is not in the table IV, find the next lower number. Opposite this number in the left-hand vertical column is the maximum number of characters that can be marked on each line.

6.4.2.2 Procedures for using the tables for a flat marking surface. Where the marking surface is flat, use the procedures of 6.4.2.1b and 6.4.2.1c.

6.5 Tailoring guidance. To ensure proper application of this standard, invitations for bids, requests for proposals, and contractual statements of work should tailor the requirements in sections 4 and 5 of this standard to exclude any unnecessary requirements. For example, if the statement of work requires the development of a revised standard, then all material related to handbooks and notices should be excluded.

6.6 Subject term (key word) listing.

CAGE code	Design activity	Lot symbol
Characteristic marking	Functional marking	NSCM code
Color codes number	Identifying number	Permanency
Legibility	ESD symbol	

TABLE III. Minimum height required for “N” lines of type.

Number of lines	Type size			
	4 pt (mini)	4 pt (std)	6 pt	8 pt
	Minimum height (in inches) required 1/			
1	.035 (0.89)	.056 (1.42)	.083 (2.11)	.111 (2.82)
2	.118 (3.00)	.139 (3.53)	.222 (5.64)	.278 (7.06)
3	.210 (5.33)	.222 (5.64)	.361 (9.17)	.445 (11.30)
4	.284 (7.21)	.305 (7.75)	.500 (12.70)	.612 (15.54)
5	.367 (9.32)	.388 (9.86)	.639 (16.23)	.779 (19.79)
6	.450 (11.43)	.471 (11.96)	.778 (19.76)	.946 (24.03)
7	.533 (13.54)	.554 (14.07)	.917 (23.29)	1.113 (28.27)
8	.616 (15.65)	.637 (16.18)	1.056 (26.82)	1.280 (32.51)
9	.699 (17.75)	.720 (18.29)	1.195 (30.35)	1.447 (36.75)
10	.782 (19.86)	.803 (20.40)	1.334 (33.88)	1.614 (41.00)

1/ Equivalent dimensions in millimeters are shown in the parentheses for general information only.

TABLE IV. Approximate length required for “N” characters of type.

Number of characters	Type size 1/			
	4 pt (mini)	4 pt (std)	6 pt	8 pt
	Approximate length (in inches) required 2/			
1	.027 (0.69)	.050 (1.27)	.070 (1.78)	.078 (1.98)
2	.054 (1.37)	.100 (2.54)	.140 (3.56)	.156 (3.96)
3	.081 (2.06)	.150 (3.81)	.210 (5.33)	.234 (5.94)
4	.108 (2.74)	.200 (5.08)	.280 (7.11)	.312 (7.92)
5	.135 (3.43)	.250 (6.35)	.350 (8.89)	.390 (9.91)
6	.162 (4.11)	.300 (7.62)	.420 (10.67)	.468 (11.89)
7	.189 (4.80)	.350 (8.89)	.490 (12.45)	.546 (13.87)
8	.216 (5.49)	.400 (10.16)	.560 (14.22)	.624 (15.85)
9	.243 (6.17)	.450 (11.43)	.630 (16.00)	.702 (17.83)
10	.270 (6.86)	.500 (12.70)	.700 (17.78)	.780 (19.81)
11	.297 (7.54)	.550 (13.97)	.770 (19.56)	.858 (21.79)
12	.324 (8.23)	.600 (15.24)	.840 (21.34)	.936 (23.77)
13	.351 (8.92)	.650 (16.51)	.910 (23.11)	1.014 (25.76)
14	.378 (9.60)	.700 (17.78)	.980 (24.89)	1.092 (27.74)
15	.405 (10.29)	.750 (19.05)	1.050 (26.67)	1.170 (29.72)
16	.432 (10.97)	.800 (20.32)	1.120 (28.45)	1.248 (31.70)
17	.459 (11.66)	.850 (21.59)	1.190 (30.23)	1.326 (33.68)
18	.486 (12.34)	.900 (22.86)	1.280 (32.51)	1.404 (35.66)
19	.513 (13.03)	.950 (24.13)	1.330 (33.78)	1.482 (37.64)
20	.540 (13.72)	1.000 (25.40)	1.400 (35.56)	1.560 (39.62)

1/ pt = parts in .014 inch (0.35 millimeter) units. Example, 4 pt = .056 inch (1.40 millimeter) letter height.

2/ Equivalent dimensions in millimeters are shown in the parentheses for general information only.

* 6.7 Changes from previous issue. The margins of this standard are marked with asterisks to indicate where changes from the previous issue were made. This was done as a convenience only and the Government assumes no liability whatsoever for any inaccuracies in these notations. Bidders and contractors are cautioned to evaluate the requirements of this document based on the entire content irrespective of the marginal notations and relationship to the last previous issue.

APPENDIX A

FSC 5905 - RESISTORS

A.1 SCOPE

A.1.1 Scope. The following define the requirements that pertain to both commercial and military electronic devices. Where the requirements are not stated, refer to sections 4 and 5 herein. This appendix is a mandatory part of this standard. The information contained herein is intended for compliance.

This appendix establishes the marking requirements that apply to a specific FSC. These requirements are to be applied in addition to the requirements of sections 4 and 5 herein. In the event of conflict between this appendix and section 4 or 5, the appendix shall take precedence.

A.2 APPLICABLE DOCUMENTS. This section is not applicable to this appendix.

A.3 GENERAL REQUIREMENTS

A.3.1 Functional marking (variable resistors).

A.3.1.1 Terminal identification. Terminals shall be marked so that number 1 represents the counterclockwise terminal, number 2 represents the variable contact terminal, and number 3 represents the clockwise terminal. The terms “counterclockwise” and “clockwise” are used in relation to the actuating device (shaft of screw) when viewed from the exposed operating end.

A.3.1.1.1 Pin or solder-lug type. The numerals designating terminal identification may be marked adjacent to the terminal, or the circuit diagram (see figure A-1) may be used, provided that such identification clearly indicates the applicable terminals. The colors, as shown on figure A-1, are not required for pin or solder-lug terminal type resistors.

A.3.1.1.2 Flexible-lead type. Colors of flexible-lead insulation shall conform to MIL-STD-104, and terminals shall be identified as follows:

Terminal number	Color of insulation
1	Yellow
2	Red
3	Green

APPENDIX A

A.3.1.2 Other functional marking. A circuit diagram shall be marked on any surface of an adjustment type variable resistor (trimmers), in accordance with one of the optional diagrams shown on figure A-1.

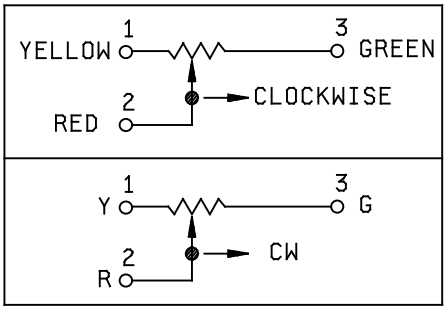

FIGURE A-1. Circuit diagram and terminal identification (FSC 5905).

A.3.2 Part identification marking.

A.3.2.1 Marking of resistors. Marking of resistors shall conform to method I or II, as specified in the acquisition document and as shown in table A-I.

A.3.2.2 Method I. Characteristics and rating shall be marked in the sequence (reading from left to right) of the columnar heading shown under “Order of Precedence” in table A-I. Where physical size of the part precludes the marking of all characteristics and ratings, marking requirements shall be specified in the acquisition document in the order of precedence shown by the numerical figures in table A-I.

TABLE A-I. Characteristics and rating marking requirements (FSC 5905).

Marking method for resistance type		Order of precedence			
Method	Resistor type	Resistance	Resistance tolerance	Wattage	Temperature coefficient
I	Fixed (wire-wound)	1	2	4	3
II	Fixed (composition)	1	2		
I 1/	Fixed (film)	1	2	4	3
I	Variable	1	2	3	
I	Thermal (thermistor)	1	2		3

1/ Color-coding may be applicable in acquisition documents approved prior to this standard, and to subsequent revisions of such documents.

A.3.2.2.1 Fixed resistance numerical code. The fixed nominal resistance shall be expressed in ohms and is identified by four digits; the first three digits represent significant figures and the last digit specifies the number of zeros to follow. When the value of resistance is less than 100 ohms, or fractional values of an ohm are required, the letter “R” shall be substituted for one of the significant figures. The resistance value designations are shown in table A-II.

APPENDIX A

TABLE A-II. Resistance value designations.

Designation				Resistance (ohms)			
R100	to	R976	Inclusive	0.10	to	0.976	Inclusive
1R00	to	9R76	Inclusive	1.00	to	9.76	Inclusive
10R0	to	97R6	Inclusive	10.0	to	97.6	Inclusive
1000	to	9760	Inclusive	100	to	976	Inclusive
1001	to	9761	Inclusive	1,000	to	9,760	Inclusive
1002	to	9762	Inclusive	10,000	to	97,600	Inclusive
1003	to	9763	Inclusive	100,000	to	976,000	Inclusive
1004	to	9764	Inclusive	1,000,000	to	9,760,000	Inclusive

A.3.2.3 Method II. Method II marking may be specified in new acquisition documents for composition resistors only. Characteristics shall be marked as shown in table A-I by color bands only. (Figure A-2 shows the marking of resistors to indicate the resistance value, resistance tolerance, and FR level.) An example for color-coding a 4300 ohms ±5 percent, “M” failure rate level composition resistor is:

Color-code for first significant figure, yellow (4);
Color-code for second significant figure, orange (3);
Color-code for multiplier, red (times 100);
Color-code for tolerance, gold (±5 percent); and
Color-code for failure rate level, brown (“M” failure rate level)

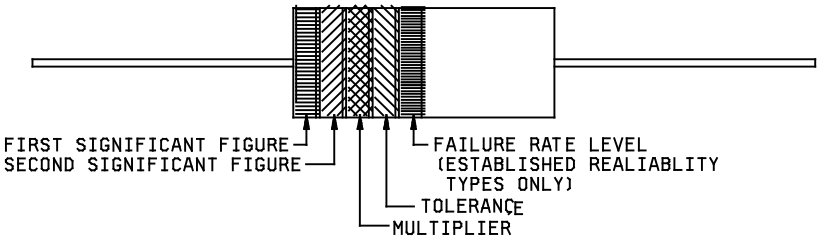

FIGURE A-2. Marking of composition type resistors.

APPENDIX B

FSC 5910 - CAPACITORS

B.1 SCOPE

B.1.1 Scope. The following define the requirements that pertain to both commercial and military electronic devices. Where the requirements are not stated, refer to sections 4 and 5 herein. This appendix is a mandatory part of this standard. The information contained herein is intended for compliance.

This appendix establishes the marking requirements that apply to a specific FSC. These requirements are to be applied in addition to the requirements of sections 4 and 5 herein. In the event of conflict between this appendix and section 4 or 5, the appendix shall take precedence.

B.2. APPLICABLE DOCUMENTS. This section is not applicable to this appendix.

B.3. GENERAL REQUIREMENTS

B.3.1 Functional marking.

B.3.1.1 Polarity. Polarized capacitors shall be marked as follows:

a. A single “+” symbol shall indicate the positive terminal on nontubular and single-ended tubular capacitors.

b. A minimum of four “+” symbols shall indicate the positive terminal on axial-lead tubular capacitors. These shall be located approximately 90 degrees apart, at a distance no greater than 25 percent of the total body length away from the positive end of the body and located so as to be readily distinguishable from other markings. Allowance shall be made for proper isolation of the “+” symbols when calculating the maximum number of characters that can be placed on the capacitor.

c. All other symbols or markings required shall be as specified in the acquisition document.

B.3.2 Part identification marking.

B.3.2.1 Capacitor marking. Marking of capacitors shall conform to method I or II, as specified in the acquisition document. Characteristics and ratings shall be marked in the sequence (reading from left to right) of the columnar heading shown under “Order of Precedence” in table B-I. Other ratings and applicable codes for method II shall be as specified in the acquisition document, Where size characteristics will not accommodate all of these characteristics and ratings, marking shall be as specified in the acquisition document in the order of precedence shown by the numerical figures in table B-I.

B.3.2.2 Marking location. All marking of capacitors shall be applied to the body enclosure (excluding any supplementary insulation sleeving). Method II shall be applied starting with (or clockwise from) the “part” code (black).

APPENDIX B

TABLE B-I. Characteristic and rating marking requirements (FSC 5910).

Dielectric	Order of precedence				
	Capacitance	Capacitance tolerance	Voltage	Temperature	Current
Air:					
Fixed	1	3	2	4	
Variable	1	-	2	3	
Ceramic					
Fixed	1	3	2	4	
Variable	1	-	2	3	
Electrolytic:					
Fixed	1	4	2	3	
Glass					
Fixed	1	3	2	4	
Metallized paper:					
Fixed	1	3	2	4	
MICA:					
Fixed	1	5	2	4	3
Paper:					
Fixed	1	5	2	4	1/ 3
Paper-plastic:					
Fixed	1	4	2	3	
Plastic:					
Fixed	1	4	2	3	
Vacuum:					
Fixed	1		2	4	3
Variable	1		2	4	3

1/ Applicable to feed-through and by-pass capacitors.

APPENDIX C

FSC 5915 - FILTERS AND NETWORKS

C.1 SCOPE

C.1.1 Scope. The following define the requirements that pertain to both commercial and military electronic devices. Where the requirements are not stated, refer to sections 4 and 5 herein. This appendix is a mandatory part of this standard. The information contained herein is intended for compliance.

This appendix establishes the marking requirements that apply to a specific FSC. These requirements are to be applied in addition to the requirements of sections 4 and 5 herein. In the event of conflict between this appendix and section 4 or 5, the appendix shall take precedence.

C.2 APPLICABLE DOCUMENTS. This section is not applicable to this appendix.

C.3 GENERAL REQUIREMENTS

C.3.1 Functional marking.

C.3.1.1 Terminal identification. Terminals shall be identified as to their function (such as, “INPUT”, “OUTPUT”, “COMMON”, “CASE”) using numerals, alphabetic symbols, or their functional names, as specified in the acquisition document. Terminals of radio frequency interference filters need not be identified as to function if the filter is electrically symmetrical. If the filter is not electrically symmetrical, the input or output terminals shall be identified. Broadband electromagnetic interference (EMI) filters which utilize the inductive input, or capacitive input “L” electrical circuit configurations shall be marked such that the symbol “C” (indicating capacitive input), or the symbol “L” indicating inductive input is marked on the filter case at the threaded end of the filter.

C.3.1.2 Other functional marking. Electrical circuit diagrams, cautionary markings, and other markings and symbols shall be as specified in the acquisition document.

C.3.2 Part identification marking.

C.3.2.1 Filter and radar pulse network marking. Marking of filter and radar pulse forming networks shall conform to method I.

C.3.2.2 High-pass, low-pass, band-pass, band-suppression, and dual functioning.

C.3.2.2.1 Type marking. Marking shall include the type of filter function (such as high-pass, low-pass, band-pass, band suppression), and the discrimination characteristics referring to the applicable frequencies specified in the acquisition document. Where the lack of space prohibits the inclusion of discrimination characteristics, the design (nominal) center frequency shall be marked on the case for band-pass and band-suppression filters, and the cutoff frequency shall be marked on the case for high-pass and low-pass filters.

C.3.2.2.2 Ratings. Source and load impedance rating shall be marked on the filters in accordance with the requirements specified in the acquisition document. In addition, any other ratings such as dc voltage rating or signal-input voltage rating shall be marked on filters in accordance with the requirements specified in the acquisition document.

C.3.2.2.3 Full marking. Figure C-1 shows an example of method I marking applied in full.

68094	- Design activity code
78091-1	- Identifying number
12345 0433A	- Source code; date code; and lot symbol
ZZZ	- Trademark
1.9 kHz - 3 dB Max	- Discrimination characteristics
IN 1-2 600Ω	- Source impedance
OUT 3-4 600Ω	- Load impedance

FIGURE C-1. Method I marking example for engineering drawing.

C.3.2.3 Radio interference.

C.3.2.3.1 Ratings. Voltage, current and maximum operating (power) frequency ratings, as specified in the acquisition document, and other ratings, specified in the acquisition document shall be marked on the filter.

C.3.2.3.2 Full marking. Figure C-2 shows an example of method I marking applied in full.

68094	- Design activity code
78091-1	- Identifying number
12345 0433A	- Source code; date code; and lot symbol
125 volts (rms)	
400 volts dc	- Rated voltage
1 ampere	- Rated current
Input 1-2	- Terminal identification
400 Hz	- Maximum operating (power) frequency

FIGURE C-2. Method I marking example for engineering drawing. - Continued.

C.3.2.4 Radar pulse-forming network.

C.3.2.4.1 Characteristics and ratings. Characteristics and ratings shall be as specified in the acquisition document. However, any data or information of a classified nature shall not be marked on the part.

C.3.2.4.2 Contract or purchase order number. The contract or purchase order number shall be marked on each network.

C.3.2.4.3 Serial number. The network's serial number shall be marked on the network.

APPENDIX D

FSC 5920 - FUSES, FUSEHOLDERS, LIGHTNING ARRESTERS, ELECTROSTATIC DISCHARGERS, AND TELEPHONE PROTECTORS

D.1 SCOPE

D.1.1 Scope. The following define the requirements that pertain to both commercial and military electronic devices. Where the requirements are not stated, refer to sections 4 and 5 herein. This appendix is a mandatory part of this standard. The information contained herein is intended for compliance.

This appendix establishes the marking requirements that apply to a specific FSC. These requirements are to be applied in addition to the requirements of sections 4 and 5 herein. In the event of conflict between this appendix and section 4 or 5, the appendix shall take precedence.

D.2 APPLICABLE DOCUMENTS. This section is not applicable to this appendix.

D.3 GENERAL REQUIREMENTS

D.3.1 Functional marking.

D.3.1.1 Terminal identification. When specified in the acquisition document, lightning arresters, and telephone protectors shall be identified as to their function (such as “LINE”, “LOAD”, “INSTRUMENT”, “INDICATOR”, “GROUND”) using numerals, alphabetic symbols, or their functional names as applicable.

D.3.1.2 Other functional marking. Electrical circuit diagrams, cautionary markings, alignment marks, assembly instructions, and other markings and symbols shall be as specified in the acquisition document.

D.3.2 Part identification marking.

D.3.2.1 Method I marking. Unless otherwise specified in the acquisition document, marking of fuses, fuseholders, lightning arresters, electrostatic dischargers, and telephone protectors shall conform to method I. Where size limitations will not accommodate all of the marking requirements of 5.2, the following requirements and order of precedence shall apply:

a. Identifying number.

b. Manufacturer’s source code, name or trademark.

c. Current rating, when applicable.

d. Voltage rating, when applicable.

e. Date code, when applicable.

f. Other ratings and markings, when applicable.

D.3.2.2 Method II color coding (telephone protectors only). The dc breakdown voltage ratings shall be color coded with three dots in accordance with method II, except that the colors to be used shall be as specified in the acquisition document.

APPENDIX E

FSC 5925 - CIRCUIT BREAKERS

E.1 SCOPE

E.1.1 Scope. The following define the requirements that pertain to both commercial and military electronic devices. Where the requirements are not stated, refer to sections 4 and 5 herein. This appendix is a mandatory part of this standard. The information contained herein is intended for compliance.

This appendix establishes the marking requirements that apply to a specific FSC. These requirements are to be applied in addition to the requirements of sections 4 and 5 herein. In the event of conflict between this appendix and section 4 or 5, the appendix shall take precedence.

E.2 APPLICABLE DOCUMENTS. This section is not applicable to this appendix.

E.3 GENERAL REQUIREMENTS

E.3.1 Functional marking.

E.3.1.1 Main terminals. Main terminals shall be marked so that when the circuit breaker is in its vertical operating position the main terminals shall be identified with the word “LINE” for the line terminals, and the load terminals shall be identified with the word “LOAD”. Where size limitations will not accommodate this marking, the acquisition document shall specify the use of the number “1” to identify the line terminals, and the number “2” to identify the load terminals. For multiphase circuit breakers, a letter shall be used with the words “LINE” and “LOAD”. Where the acquisition document specifies the used with the numbers to represent “LINE” and “LOAD”, the letters shall precede the number. When viewed from the rear of the circuit breaker, these letters shall be read consecutively from left to right (see figure E-1).

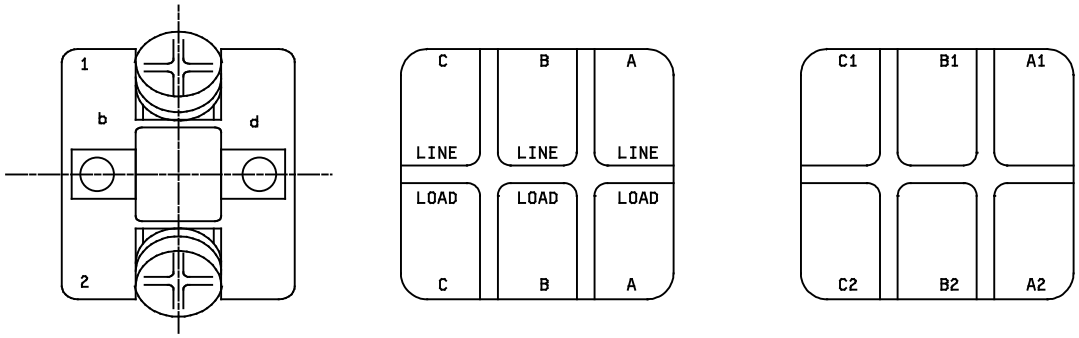

FIGURE E-1. Terminal identification for multi-phase circuit breakers.

E.3.1.2 Auxiliary terminals. Auxiliary terminals shall be identified by lower case letters, consecutively, from right to left or top to bottom as viewed from the rear (see figure E-1).

E.3.1.3 Other functional marking. Other functional marking shall be as specified in the acquisition document.

E.3.2 Part identification marking.

E.3.2.1 Circuit breaker marking. Marking of circuit breakers shall conform to method I. Additions to the requirements of 5.2 are as follows:

a. Current rating.

b. Voltage rating.

c. Operating frequency, if applicable.

E.3.2.2 Marking location. Unless otherwise specified in the acquisition document, all method I marking except for the main terminal marking, shall be applied to the side of the circuit breaker case. The current rating shall be applied to the exposed end surface of the actuating arm, when specified in the acquisition document.

APPENDIX F

FSC 5930 - SWITCHES

F.1 SCOPE

F.1.1 Scope. The following define the requirements that pertain to both commercial and military electronic devices. Where the requirements are not stated, refer to sections 4 and 5 herein. This appendix is a mandatory part of this standard. The information contained herein is intended for compliance.

This appendix establishes the marking requirements that apply to a specific FSC. These requirements are to be applied in addition to the requirements of sections 4 and 5 herein. In the event of conflict between this appendix and section 4 or 5, the appendix shall take precedence.

F.2 APPLICABLE DOCUMENTS. This section is not applicable to this appendix.

F.3 GENERAL REQUIREMENTS

F.3.1 Functional marking.

F.3.1.1 Polarity (thermostatic switches only). A “+” sign shall be marked adjacent to the positive terminal of a polarized metallic or bimetallic thermostatic switch.

F.3.1.2 Rotary switches. Rotary switch terminals shall be marked with numbers, whose sequence is counterclockwise and visible when viewed from the rear end of the switch, unless otherwise specified in the acquisition document. Open-frame construction switches may be marked with terminal numbers on a marking plate. Open-frame construction switches shall be marked with a contrasting color dot, raised or depressed molding, or punched indentation on or near the periphery of the switch section, and marking plate if used. It shall be between terminals 1 and 2 and shall be visible when viewed from the rear end of the switch, unless otherwise specified in the acquisition document.

APPENDIX F

F.3.1.2.1 Toggle switches. Toggle switch terminals shall be marked in accordance with figure F-1 by either raised or depressed numbers. When specified in the acquisition document, the terminal identification may be stamped on the side of the switch case.

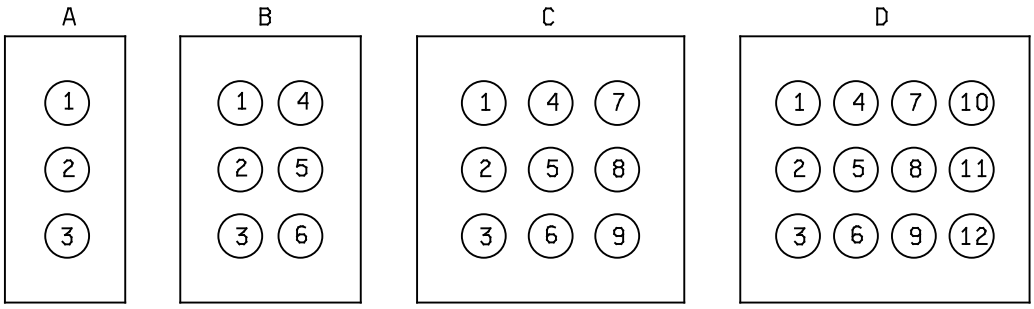

NOTE: All views are rear face of switch with lever in the closed (on) position oriented up.

FIGURE F-1. Termination identification.

F.3.1.2.2 Snap action and push switches. Terminals of snap action and push switches shall be marked to indicate the contact arrangement as follows (when specified in the acquisition document, the abbreviated marking shall be used):

COMMON or COM, or C
NORMALLY OPEN or NO
NORMALLY CLOSED or NC

F.3.1.3 Other functional marking. When specified in the acquisition document, a circuit diagram shall be marked on the switch.

F.3.2 Part identification marking.

F.3.2.1 Switch marking. Marking of switches shall conform to method I. When specified in the acquisition document, additions to the requirements of 5.2 are as follows:

a. Current rating.

b. Voltage rating.

c. Operating frequency, if applicable.

APPENDIX G

FSC 5935 - CONNECTORS

G.1 SCOPE

G.1.1 Scope. The following define the requirements that pertain to both commercial and military electronic devices. Where the requirements are not stated, refer to sections 4 and 5 herein. This appendix is a mandatory part of this standard. The information contained herein is intended for compliance.

This appendix establishes the marking requirements that apply to a specific FSC. These requirements are to be applied in addition to the requirements of sections 4 and 5 herein. In the event of conflict between this appendix and section 4 or 5, the appendix shall take precedence.

G.2 APPLICABLE DOCUMENTS. This section is not applicable to this appendix.

G.3 GENERAL REQUIREMENTS

G.3.1 Functional marking.

G.3.1.1 Functional marking. Functional marking shall be as specified in the acquisition document.

G.3.2 Part identification marking.

G.3.2.1 Connector marking. Marking of connectors shall conform to method I.

G.3.2.2 Marking location.

G.3.2.2.1 Connectors with shells. All marking shall be on the shell of the connector unless space is not adequate for full part number or legibility. In such cases the coupling ring may be marked. All marking shall be located in a position to ensure readability.

G.3.2.2.2 Printed wiring board connectors and connectors without shells. Marking shall be on the exterior of the connector. Marking shall be located in a position to assure readability after the connector is mounted and mated.

APPENDIX H

FSC 5945 - RELAYS

H.1 SCOPE

H.1.1 Scope. The following define the requirements that pertain to both commercial and military electronic devices. Where the requirements are not stated, refer to sections 4 and 5 herein. This appendix is a mandatory part of this standard. The information contained herein is intended for compliance.

This appendix establishes the marking requirements that apply to a specific FSC. These requirements are to be applied in addition to the requirements of sections 4 and 5 herein. In the event of conflict between this appendix and section 4 or 5, the appendix shall take precedence.

H.2 APPLICABLE DOCUMENTS. This section is not applicable to this appendix.

H.3 GENERAL REQUIREMENTS

H.3.1 Functional marking.

H.3.1.1 Terminals. Terminals shall be marked in accordance with figure H-1. The contact arrangements and symbols are for reference only, and unless otherwise specified in the acquisition document, shall not be marked on the relay. Marking the terminal identification shall be on the circuit diagram only.

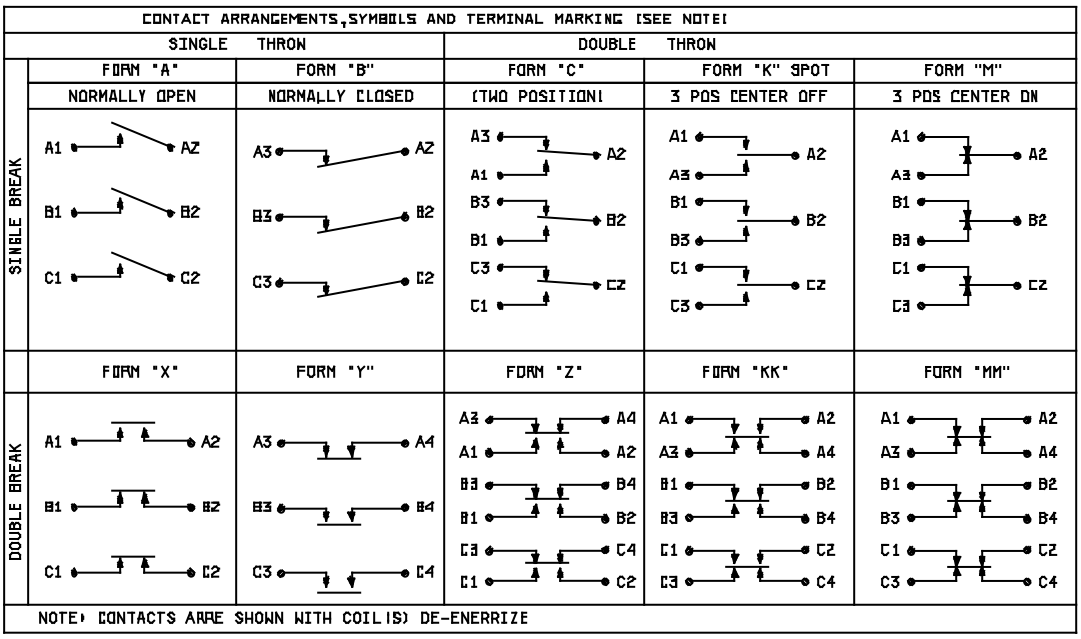

FIGURE H-1. Symbols and markings for terminals.

H.3.1.1.1 Coil terminals. Coil terminals shall be marked in accordance with figure H-2. Unless otherwise specified in the acquisition document, the symbols shown on figure H-2 are for reference only and are not intended for marking on the relay.

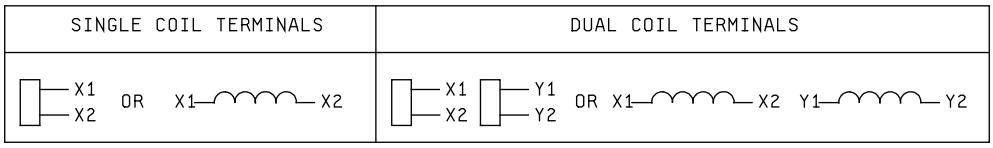

FIGURE H-2. Symbols and markings for relay coil terminals.

H.3.1.1.2 Dual coil terminals. For dual coil relays, the relationship between coil and contacts shall be as specified in table H-I.

TABLE H-I. Dual coil relay markings.

Coil energized	Contacts closed	
	Load	Auxiliary
X1-X2	A1-A2 B1-B2 C1-C1	11-12 31-32 51-52
Y1-Y2	A3-A2 (or A3-A4) B3-B2 (or B3-B4) C3-C2 (or C3-C4)	21-22 41-42 61-62

H.3.1.1.3 Leadwire insulation marking. Leadwire terminals shall be color-coded on the insulators in accordance with figure H-3 and MIL-STD-104. Figure H-3 shows the color codes associated with the terminal numbers. The contact arrangements and symbols are for reference only, and, unless otherwise specified in the acquisition document, shall not be marked on the relay.

H.3.1.1.4 Polarity marking. Terminal X1 shall be marked with a plus (+) sign for polarized relays. When specified in a acquisition document, this terminal shall be identified by a blue-colored bead.

H.3.1.2 Other functional marking. Where applicable, the acquisition document shall specify the direction of maximum sensitivity to shock, vibration, acceleration and similar characteristics. Unless otherwise specified, a circuit diagram shall be marked on one of the surfaces vertical to the terminal surface. Figure H-4 shows an example of a typical circuit diagram marking.

APPENDIX H

H.3.2 Part identification marking.

H.3.2.1 Relay marking. Marking of relays shall conform to method I. Characteristics and ratings shall be marked in the following order of precedence:

a. Rated coil voltage (or current).

b. Operating frequency (if applicable).

c. Contact ratings.

Where size limitations will not accommodate these characteristics and ratings, marking requirements shall be specified in the acquisition document in the order of precedence shown above.

H.3.2.2 Marking location. Unless otherwise specified in the acquisition document, all method I marking shall be applied to the top surface (opposite the terminal surface) of the relay case.

APPENDIX H

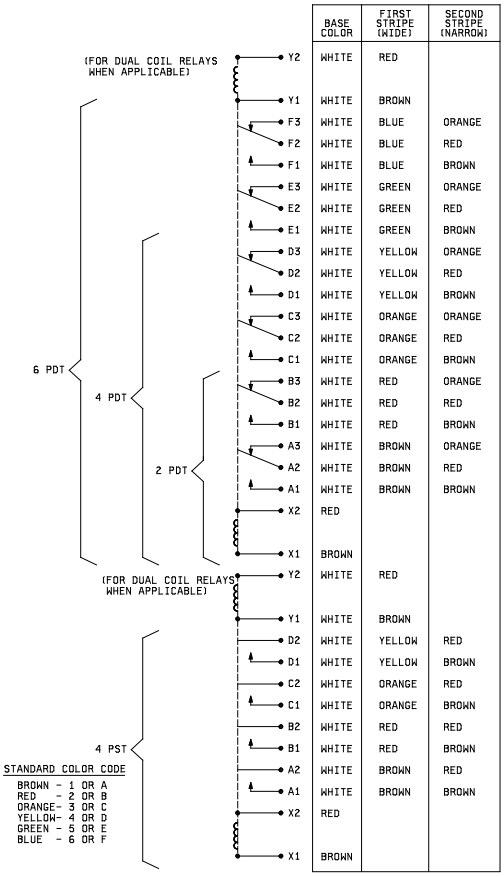

	BASE COLOR	FIRST STRIPE (WIDE)	SECOND STRIPE (NARROW)
Y2	WHITE	RED	
Y1	WHITE	BROWN	
F3	WHITE	BLUE	ORANGE
F2	WHITE	BLUE	RED
F1	WHITE	BLUE	BROWN
E3	WHITE	GREEN	ORANGE
E2	WHITE	GREEN	RED
E1	WHITE	GREEN	BROWN
D3	WHITE	YELLOW	ORANGE
D2	WHITE	YELLOW	RED
D1	WHITE	YELLOW	BROWN
C3	WHITE	ORANGE	ORANGE
C2	WHITE	ORANGE	RED
C1	WHITE	ORANGE	BROWN
B3	WHITE	RED	ORANGE
B2	WHITE	RED	RED
B1	WHITE	RED	BROWN
A3	WHITE	BROWN	ORANGE
A2	WHITE	BROWN	RED
A1	WHITE	BROWN	BROWN
X2	RED		
X1	BROWN		
Y2	WHITE	RED	
Y1	WHITE	BROWN	
D2	WHITE	YELLOW	RED
D1	WHITE	YELLOW	BROWN
C2	WHITE	ORANGE	RED
C1	WHITE	ORANGE	BROWN
B2	WHITE	RED	RED
B1	WHITE	RED	BROWN
A2	WHITE	BROWN	RED
A1	WHITE	BROWN	BROWN
X2	RED		
X1	BROWN		

FIGURE H-3. Symbols and color codes for leadwire terminals.

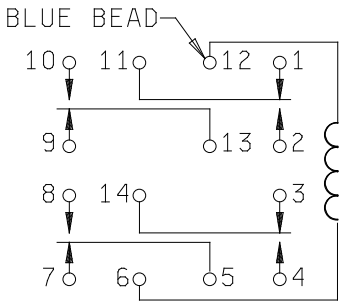

FIGURE H-4. Circuit diagram and terminal identification (FSC 5945).

APPENDIX I

FSC 5950 - COILS, INDUCTORS, AND TRANSFORMERS

I.1 SCOPE

I.1.1 Scope. The following define the requirements that pertain to both commercial and military electronic devices. Where the requirements are not stated, refer to sections 4 and 5 herein. This appendix is a mandatory part of this standard. The information contained herein is intended for compliance.

This appendix establishes the marking requirements that apply to a specific FSC. These requirements are to be applied in addition to the requirements of sections 4 and 5 herein. In the event of conflict between this appendix and section 4 or 5, the appendix shall take precedence.

I.2 APPLICABLE DOCUMENTS. This section is not applicable to this appendix.

I.3 GENERAL REQUIREMENTS

I.3.1 Functional marking.

I.3.1.1 Terminal identification. The terminals shall be identified by numbers or color-coding, as specified in the acquisition document. Insulated terminals shall conform to MIL-STD-104. Where numbering or color-coding of terminals is not practical, the acquisition document shall specify the alternate terminal identification.

I.3.1.2 Other functional marking. A circuit diagram shall be marked on the side or top of the transformer or inductor as shown on figure I-1. Unless otherwise specified in the acquisition document, the ratings that are to be marked on the circuit diagram shall be as shown in table I-I. Where size limitations will not accommodate all of these ratings, marking requirements shall be specified in the acquisition document in the order of precedence shown in table I-I.

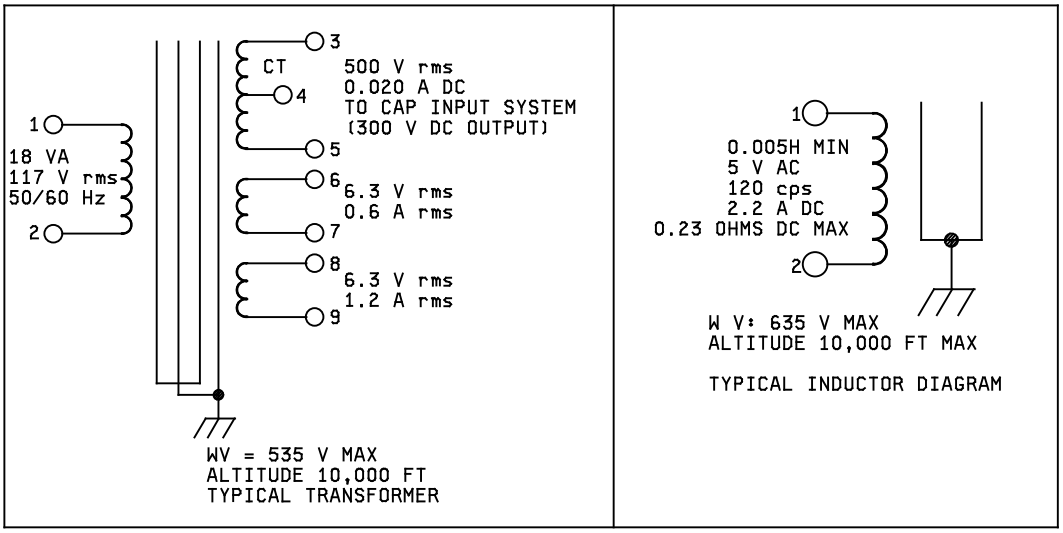

FIGURE I-1. Examples of typical circuit diagrams.

APPENDIX I

TABLE I-I. Rating marking requirements.

Part	Primary	Secondary
Power, vibrator, inverter, and line input transformers	Rated voltage, frequency, and working voltage.	Rated voltage(s) and current(s)
Inductors	Rated inductance, voltage, dc current, dc resistance, frequency and working voltage.	Not applicable
Single-frequency audio inductors or transformers (except audio oscillator)	Source impedance, dc current, frequency range, power level in watts, and working voltage.	Load impedance and working voltage
Audio oscillator transformer	DC current, frequency range, power level, and working voltage.	DC current
Pulse transformers (except pulse oscillator)	Pulse width and duty cycle, pulse, polarity, source impedance, operating voltage, and current.	Load impedance and current
Pulse oscillator transformer	DC resistance, turns ratio, operating voltage and current, repetition rate, duty cycle, and working voltage.	Not applicable
Saturable-core inductor and transformer	Maximum control current, impedance, impedance variation, rated voltages, frequency, and working voltage.	Not applicable

I.3.2 Part identification marking.

I.3.2.1 Transfer marking. Marking of transformers shall conform to method I.

I.3.2.2 Coils marking. Marking on coils shall conform to method I or II.

APPENDIX I

I.3.2.2.1 Cylindrical coils marking. Cylindrical coils shall conform to method II except when the inductance value is less than 10 microhenries, the first or second code shall be gold to represent the decimal point; the other two codes will represent the characteristic values. (Figure I-2 shows the marking to indicate military part identifier, inductance value, and inductance tolerance.)

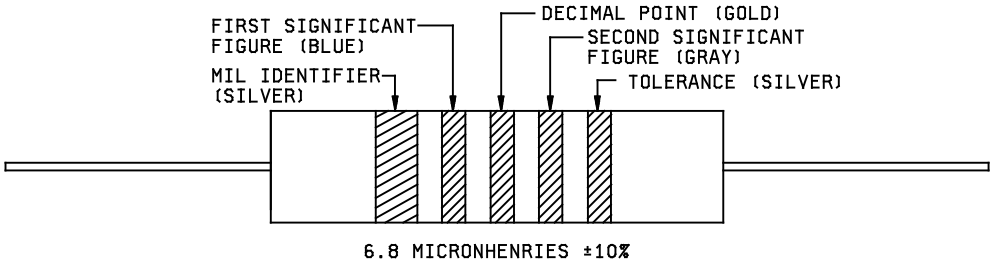

Typical color coding under 10 microhenries

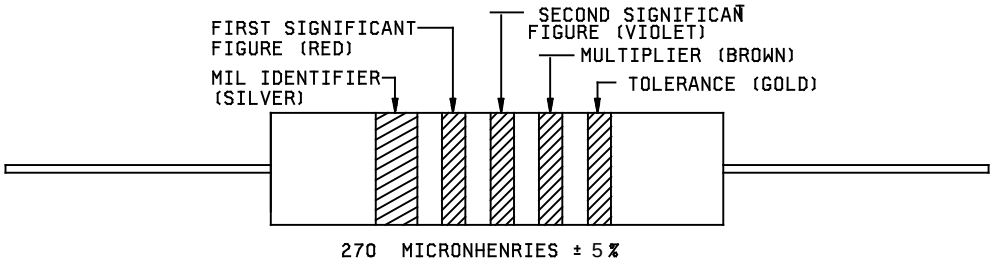

Typical color coding.

FIGURE I-2. Typical color coding of cylindrical coils.

APPENDIX J

FSC 5955 - PIEZOELECTRIC CRYSTAL UNITS AND OVENS

J.1 SCOPE

J.1.1 Scope. The following define the requirements that pertain to both commercial and military electronic devices. Where the requirements are not stated, refer to sections 4 and 5 herein. This appendix is a mandatory part of this standard. The information contained herein is intended for compliance.

This appendix establishes the marking requirements that apply to a specific FSC. These requirements are to be applied in addition to the requirements of sections 4 and 5 herein. In the event of conflict between this appendix and section 4 or 5, the appendix shall take precedence.

J.2 APPLICABLE DOCUMENTS. (This section is not applicable to this appendix.)

J.3 GENERAL REQUIREMENTS

J.3.1 Functional marking.

J.3.1.1 Crystal oven terminals marking (octal base). Pin-type terminals shall be marked so that when an octal-base crystal oven is viewed from the bottom, number 1 will be adjacent to and clockwise from the socket key. All other terminals shall be identified clockwise from this pin. Insulated, flexible leads shall be color-coded in accordance with MIL-STD-104.

J.3.2 Part identification marking.

J.3.2.1 Oscillators and crystal units. The frequency shall be specified to the final Hertz and shall be identified by a fixed field of eight characters consisting of seven digits and a letter (H, K, M, or G) representing simultaneously, the decimal point and the appropriate multiplier as follows:

a. Less than 1 Hertz and less than 1,000 Hertz, the letter “H” is used to represent the decimal point and multiplier.

b. Greater than or equal to 1,000 Hertz, but less than 1 Megahertz, the letter “K” is used to represent the decimal point and multiplier.

c. Greater than or equal to 1 Megahertz, the letter “M” is used to represent the decimal point and multiplier.

d. Greater than or equal to 1 Gigahertz, the letter “G” is used to represent the decimal point and multiplier.

All digits preceding and following the letter (H, K, M, or G) of the group represent significant figures.

The following are examples of using the eight characters in constructing the specified frequency.

Designation			Frequency				
H0100000	to	H9999999	.01	to	.9999999	Hertz,	inclusive
1H000000	to	9H999999	1.0	to	9.999999	Hertz,	inclusive
10H00000	to	99H99999	10	to	99.999999	Hertz,	inclusive
100H0000	to	999H9999	100	to	999.9999	Hertz,	inclusive
1K000000	to	9K999999	1	to	9.999999	kilohertz,	inclusive
10K00000	to	99K99999	10	to	99.99999	kilohertz,	inclusive
100K0000	to	999K9999	100	to	999.9999	kilohertz,	inclusive
1M000000	to	9M999999	1	to	9.999999	megahertz,	inclusive
10M00000	to	99M99999	10	to	99.99999	megahertz,	inclusive
100M0000	to	999M9999	100	to	999.9999	megahertz,	inclusive
1G000000	to	9G999999	1	to	9.999999	gigahertz,	inclusive
10G00000	to	99G99999	10	to	99.99999	gigahertz,	inclusive
100G0000	to	999G9999	100	to	999.9999	gigahertz,	inclusive

J.3.2.2 Marking location.

J.3.2.2.1 Crystal units marking. The identifying number, frequency, and source code shall be located symmetrically with respect to the center axis of the crystal holder.

J.3.2.2.2 Crystal ovens marking. Part identification shall be marked on the side of the case.

APPENDIX K

FSC 5961 - SEMICONDUCTOR DEVICES

K.1 SCOPE

K.1.1 Scope. The following define the requirements that pertain to both commercial and military electronic devices. Where the requirements are not stated, refer to sections 4 and 5 herein. This appendix is a mandatory part of this standard. The information contained herein is intended for compliance.

This appendix establishes the marking requirements that apply to a specific FSC. These requirements are to be applied in addition to the requirements of sections 4 and 5 herein. In the event of conflict between this appendix and section 4 or 5, the appendix shall take precedence.

K.2 APPLICABLE DOCUMENTS

K.2.1 General. The documents listed in this section are specified in sections 3, 4, and 5 of this standard. This does not include documents cited in other sections of this standard or recommended for additional information or as examples. While every effort has been made to ensure the completeness of this list, document user are cautioned that they must meet all specified requirements documents cited in sections 3, 4, and 5 of this standard, whether or not they are listed.

K.2.2 Government documents.

K.2.2.1 Specifications, standards, and handbooks. The following specifications, standards, and handbooks form a part of this document to the extent specified herein. Unless otherwise specified, the issues of these documents are those cited in the solicitation or contract.

DEPARTMENT OF DEFENSE SPECIFICATION

MIL-PRF-19500 - Semiconductor Devices, General Specification for.

DEPARETMENT OF DEFENSE STANDARD

MIL-STD-750 - Semiconductor Devices.

* (Copies of the these documents are available online at https://assist.daps.dla.mil/quicksearch/ or from the Standardization Document Order Desk, 700 Robbins Avenue, Building 4D, Philadelphia, PA 19111-5094.)

* K.2.3 Order of precedence. Unless otherwise noted herein or in the contract, in the event of a conflict between the text of this document and the references cited herein, the text of this document takes precedence. Nothing in is document, however, supersedes applicable laws and regulations unless a specific exemption has been obtained.

APPENDIX K

K.3 GENERAL REQUIREMENTS

K.3.1 Department of Defense specification devices.

K.3.1.1 Devices covered by MIL-PRF-19500. Marking of semiconductor devices covered by MIL-PRF-19500 and its associated specifications shall conform to method I and the following:

a. Polarity marking (diodes and thyristors only).

b. Type designation, including “JAN” or “JANTX” prefix as applicable (see K.3.1.6).

c. Inspection lot identification code (see K.3.1.7).

d. Manufacturer’s designating symbol (see K.3.1.8).

e. Manufacturer’s identification (see K.3.1.9).

f. Country of origin (see K.3.1.10).

K.3.1.2 Unit pack marking. All of the marking specified in all the above, except polarity, shall appear on the carton, box, plastic envelope, and so forth, used as the initial protection or wrapping for delivery. Marking shall be in accordance with MIL-STD-129. Duplicate information need not be repeated.

K.3.1.3 Special marking. If any special marking is used, it shall in no way interfere with or obscure the marking required in all the above and shall be completely separated therefrom.

K.3.1.4 Permanence of marking. Permanence of marking shall be in accordance with MIL-STD-750, method 1022.

K.3.1.5 Diodes and unidirectional thyristors polarity marking. The polarity shall be indicated by one of the following methods.

K.3.1.5.1 Diodes. Polarity marking shall be by either an arrow or diode graphic symbol with the arrow pointing towards the negative terminal for forward bias or by a single contrasting color band or dot adjacent to the cathode-terminal for forward bias.

K.3.1.5.2 Thyristors. A graphic symbol for a thyristor with the arrow pointing towards the cathode terminal.

K.3.1.6 “JAN”, “JANTX”, “JANTXV”, or “JANS” prefix. The type designation shall bear the prefix “JAN”, “JANTX”, “JANTXV”, or “JANS”, as applicable, except that for small devices, the prefix “J”, “JX”, “JV”, or “JS”, may be used.

K.3.1.7 Inspection lot date code. Semiconductor devices shall be marked by a code indicating the date the lot was submitted for inspection. The first two numbers in the code shall be the last two digits of the number of the year. The third and fourth numbers shall be two digits indicating the calendar week of the year (see 5.2.5b). When the number of the week is a single digit, it shall be preceded by a zero. Reading from left to right or from top to bottom, the code number shall designate the year and the week, in that order. When more than one lot of a type is inspected for conformance within the same week, an inspection lot suffix letter shall be chosen, consisting of a single capital letter, and shall appear on each semiconductor device immediately following the submission date. This letter shall be chosen by the manufacturer so that each inspection lot is uniquely identified by the submission date and by the lot-identification suffix letter, if one is required.

K.3.1.8 Manufacturer's designating symbol. The designating symbol shall be used only by the manufacturer to whom it has been assigned and only on those devices manufactured at that manufacturer's plant. In the case of small devices, the manufacturer's designating symbol may be abbreviated by omitting the first "C" in the series of letters.

K.3.1.9 Manufacturer's identification. Semiconductor devices shall be marked with the name or trademark of the manufacturer who has contracted to manufacture devices for the Government or its equipment manufacturers, and at whose plant the specified conformance inspection has been performed. The identification of the equipment manufacturer may appear on the device only if the equipment manufacturer is also the device manufacturer. The name or trademark of only the original manufacturer shall appear on the device or initial container. Rebranding shall not be permitted.

K.3.1.10 Country of origin. The phrase "Made in U.S.A." shall be marked in small characters below or adjacent to other marking specified in paragraph 1 except that, for semiconductor devices made in a foreign country, the phrase shall be changed accordingly.

K.3.1.11 Marking option. The manufacturer has the option of marking the entire lot or only the sample devices to be subjected to conformance inspection. If the manufacturer exercises the option to mark only the sample devices, the procedure shall be as follows:

a. The sample devices shall be marked prior to performance of conformance inspection.

b. At the completion of inspection, the marking of the sample devices shall be inspected for conformance to the requirements of this standard.

c. The inspection lot represented by a conforming inspection sample shall then be marked and any specified visual and mechanical inspection performed.

d. The marking materials and processing applied to the inspection lot shall be the same specifications as those used for the inspection sample.

APPENDIX K

K.3.2 Non-military specification devices.

K.3.2.1 Marking of devices other than MIL-PRF-19500. Marking of semiconductor devices covered by acquisition documents other than MIL-PRF-19500 shall conform to method I and the following order of precedence (see table I):

a. Polarity marking (diodes and thyristors only, see K.3.1.5 of this appendix).

b. Identifying number (see 5.2.1).

c. Design activity code (see 5.2.2).

d. Source code (see K.3.1.8 of this appendix).

e. Date code and lot symbol (see K.3.1.7 of this appendix).

f. Manufacturer's identification (see K.3.1.9 of this appendix and note 2 of table I).

g. Country of origin (see K.3.1.10 of this appendix).

APPENDIX L

FSC 5962 - MICROELECTRONIC CIRCUIT DEVICES

L.1 SCOPE

L.1.1 Scope. The following define the requirements that pertain to both commercial and military electronic devices. Where the requirements are not stated, refer to sections 4 and 5 herein. This appendix is a mandatory part of this standard. The information contained herein is intended for compliance.

This appendix establishes the marking requirements that apply to a specific FSC. These requirements are to be applied in addition to the requirements of sections 4 and 5 herein. In the event of conflict between this appendix and section 4 or 5, the appendix shall take precedence.

L.2 APPLICABLE DOCUMENTS

L.2.1 General. The documents listed in this section are specified in sections 3, 4, and 5 of this standard. This does not include documents cited in other sections of this standard or recommended for additional information or as examples. While every effort has been made to ensure the completeness of this list, document user are cautioned that they must meet all specified requirements documents cited in sections 3, 4, and 5 of this standard, whether or not they are listed.

L.2.2 Government documents.

L.2.2.1 Specifications, standards, and handbooks. The following specifications, standards, and handbooks form a part of this document to the extent specified herein. Unless otherwise specified, the issues of these documents are those cited in the solicitation or contract.

DEPARTMENT OF DEFENSE SPECIFICATIONS

MIL-PRF-38534	-	Hybrid Microcircuits, General Specification for.
MIL-PRF-38535	-	Integrated Circuits (Microcircuits), Manufacturing, General Specification for.

* (Copies of the these documents are available online at https://assist.daps.dla.mil/quicksearch/ or from the Standardization Document Order Desk, 700 Robbins Avenue, Building 4D, Philadelphia, PA 19111-5094.)

* L.2.3 Order of precedence. Unless otherwise noted herein or in the contract, in the event of a conflict between the text of this document and the references cited herein, the text of this document takes precedence. Nothing in is document, however, supersedes applicable laws and regulations unless a specific exemption has been obtained.

APPENDIX L

L.3 GENERAL REQUIREMENTS

L.3.1 Department of Defense specification devices.

L.3.1.1 Marking. For marking requirements of microelectronic circuit devices covered by MIL-PRF-38534, and MIL-PRF-38535, and the associated specifications, see the applicable general specification (such as MIL-PRF-38534, or MIL-PRF-38535).

L.3.1.2 Marking of Standard Microcircuit Drawings (SMD's). For marking requirements of microelectronic circuit devices covered by SMD's, see the applicable drawing. If any special marking (altered item drawing number) is used by the device supplier or user/equipment contractor, it shall be in addition to the existing/original marking as required in the applicable drawing and shall be visibly separate from and in no way interfere with the marking required by the SMD.

L.3.2 Permanency and legibility.

L.3.2.1 Permanence and legibility of marking. The marking shall be permanent, legible and shall meet the marking permanence requirements of the applicable general specification (such as, MIL-PRF-38534, or MIL-PRF-38535).

L.3.3 Non-military (SCD, VID, and AID) specification devices.

L.3.3.1 Acquisition documents other than Department of Defense specification devices. Marking of microelectronic circuit devices covered by acquisition documents other than MIL-PRF-38534, and MIL-PRF-38535 and SMD's shall conform to method I and the following order of precedence.

a. Index point (for example, see MIL-PRF-38535).

b. Part or Identifying Number (PIN) (see 5.2.1).

c. Design activity code (see 5.2.2).

d. Date code (for example, see MIL-PRF-38535).

e. Lot symbol (see 5.2.6).

f. Serialization, when applicable (for example, see MIL-PRF-38535).

g. Manufacturer's identification (for example, see MIL-PRF-38535).

h. Country of origin.

i. Electrostatic discharge sensitivity identifier (for example, see MIL-PRF-38535).

L.3.3.2 Marking of altered or selected items (see ASME Y14.100). Items which are altered or selected from the controlling specification or standard shall be identified by a part number established by the using design activity drawing which depicts requirements for such alterations or selection. The original number being replaced shall not be removed or obliterated.

APPENDIX L

L.3.4 Functional marking.

L.3.4.1 Terminal index feature. An index feature shall be visible from the top or bottom of microelectronic circuit packages and located near the package periphery.

L.3.4.1.1 Peripheral lead packages. For the peripheral lead packages (flat pack and dual-in-line), convention shall be that when viewed from the top, terminal number 1 shall be adjacent to or immediately counterclockwise from the index feature. Other terminal positions shall then be successively numbered counterclockwise from terminal 1.

L..3.4.1.2 Axial lead packages. For axial lead packages, convention shall be that when viewed from the bottom, terminal 1 shall be the next terminal position clockwise from the terminal index feature.

L.3.5 Identification marking location.

L.3.5.1 Marking location and sequence. The QML (when applicable) part number, date code and ESDS identifier, if applicable shall be located on the top surface of leadless or leaded chip carrier packages, pin grid array packages, flat packages, or dual-in-line configurations and on either the top or the side of cylindrical packages (TO configurations and similar configurations). When the size of a package is insufficient to allow marking of special process identifiers on the top surface, the backside of the package may be used for these markings except the ESDS identifier, if applicable shall be marked on the top. Button cap flat packs with less than or equal to 16 leads may have the identifier marked on the ceramic. Backside marking with conductive or resistive ink shall be prohibited. For unpackaged the marking shall be located on the container. For unpackaged die, marking is to be located on the container.

APPENDIX M

FSC 5985 - ANTENNAS, WAVEGUIDES, AND RELATED EQUIPMENT

M.1 SCOPE

M.1.1 Scope. The following define the requirements that pertain to both commercial and military electronic devices. Where the requirements are not stated, refer to sections 4 and 5 herein. This appendix is a mandatory part of this standard. The information contained herein is intended for compliance.

This appendix establishes the marking requirements that apply to a specific FSC. These requirements are to be applied in addition to the requirements of sections 4 and 5 herein. In the event of conflict between this appendix and section 4 or 5, the appendix shall take precedence.

M.2 APPLICABLE DOCUMENTS. This section is not applicable to this appendix.

M.3 GENERAL REQUIREMENTS

M.3.1 Functional marking. No markings are defined.

M.3.2 Part identification marking.

M.3.2.1 Antennas, waveguides, and related equipment. Marking of antennas, waveguides, and related equipment shall conform to method I. Exceptions or additions to the requirements of section 5.2 shall be as specified in the acquisition document.

APPENDIX N

* FSC 5998 - ELECTRICAL AND ELECTRONIC ASSEMBLIES, BOARDS, CARDS, AND ASSOCIATED HARDWARE

N.1 SCOPE

N.1.1 Scope. The following define the requirements that pertain to both commercial and military electronic devices. Where the requirements are not stated, refer to sections 4 and 5 herein. This appendix is a mandatory part of this standard. The information contained herein is intended for compliance.

This appendix establishes the marking requirements that apply to a specific FSC. These requirements are to be applied in addition to the requirements of sections 4 and 5 herein. In the event of conflict between this appendix and section 4 or 5, the appendix shall take precedence.

N.2 APPLICABLE DOCUMENTS

N.2.1 General. The documents listed in this section are specified in sections 3, 4, and 5 of this standard. This does not include documents cited in other sections of this standard or recommended for additional information or as examples. While every effort has been made to ensure the completeness of this list, document user are cautioned that they must meet all specified requirements documents cited in sections 3, 4, and 5 of this standard, whether or not they are listed.

N.2.2 Government documents.

N.2.2.1 Specifications, standards, and handbooks. The following specifications, standards, and handbooks form a part of this document to the extent specified herein. Unless otherwise specified, the issues of these documents are those cited in the solicitation or contract.

DEPARTMENT OF DEFENSE SPECIFICATION

MIL-PRF-31032 - Printed Circuit Board/Printed Wiring Board, General Specification For.

* (Copies of the these documents are available online at https://assist.daps.dla.mil/quicksearch/ or from the Standardization Document Order Desk, 700 Robbins Avenue, Building 4D, Philadelphia, PA 19111-5094.)

* N.2.3 Non-Government publications. The following documents form a part of this document to the extent specified herein. Unless otherwise specified, the issues of these documents are those cited in the solicitation or contract.

IPC – ASSOCIATION CONNECTING ELECTRONICS INDUSTRIES (IPC)

J-STD-609 - Marking and Labeling of Components, PCBs and PCBAs to Identify Lead (Pb), Pb-Free and Other Attributes.

(Copies of these documents are available online from www.ipc.org or IPC – Association Connecting Electronics Industries, 3000 Lakeside Drive, Suite 309 S, Bannockburn, IL 60015-1249.)

* N.2.4 Order of precedence. Unless otherwise noted herein or in the contract, in the event of a conflict between the text of this document and the references cited herein, the text of this document takes precedence. Nothing in is document, however, supersedes applicable laws and regulations unless a specific exemption has been obtained.

APPENDIX N

N.3 GENERAL REQUIREMENTS

N.3.1 Part identification marking.

* N.3.1.1 Card holders, guides and extractors/ejectors marking. Card holders, guides and extractors/ejectors do not require marking of parts.

* N.3.1.2 Printed circuit and printed wiring boards.

* N.3.1.2.1 Method I marking (for QPL parts).. Each production printed board, each qualification test specimen, and each set of conformance test circuit strips (as opposed to each individual test coupon) shall be marked in accordance with the master drawing. As a minimum, each production printed board, qualification test specimen, or conformance test circuit strip shall be marked with the printed board manufacturer's CAGE (Commercial and Government Entity), lot date code, and traceability code. The marking shall be produced by one of the following methods: the same process used in producing the conductive pattern; or by the use of a fungistatic ink, or paint applied to the printed board, or to a label which is applied to the printed board, or by mechanical pencil, mechanical machining, or laser machining on a metallic area provide for marking purposes. Conductive legends or marking shall be no closer to the conductive pattern of the printed board than the spacing requirements specified. All marking shall be able to withstand solder fluxes, cleaning solutions, and molten solder encountered in the manufacture of printed boards, shall remain legible after all tests, and in no manner affect printed board performance.

* N.3.1.2.2 Method II marking (for QML parts). Marking of compliant printed boards and their associated test coupons shall be in accordance with MIL-PRF-31032, the following requirements, and the identification and marking provisions of the printed board procurement documentation. The marking shall be permanent, legible, complete, and shall meet the marking adhesion requirements of the applicable specification sheets. If any additional marking is used or required by the printed board procurement documentation, it shall in no way interfere with the marking required herein, and shall be visibly separated. Only the approved QML-31032 manufacturer is authorized to apply the QML brand.

N.3.1.2.2.1 Full marking. Unless otherwise specified by the printed board procurement documentation, the following full marking shall be placed on each printed board and test coupon strip:

a. "QML" or "Q" brand.

b. Printed board Part or Identifying Number (PIN) with revision level (when applicable) or other special coding system detailed by the procurement documentation.

c. Lot date code.

d. QML manufacturer's CAGE code.

e. Traceability.

N.3.1.2.2.2 Minimum marking. When the physical size of the printed board precludes the placement of the information specified in N.3.1.2.2.1, the minimum marking shall be as specified in the printed board procurement documentation. In those cases where full marking requirements are not on the printed board, the full marking shall be placed on the unit package.

* N.3.1.3 Circuit card, electrical, and electronic assemblies. Each circuit card assembly, electrical assembly, or electronic assembly (hereafter called assembly) shall be marked in accordance with the assembly drawing or printed board master drawing. As a minimum, traceability marking shall include the assembly part number, the assembler's CAGE (Commercial and Government Entity), and date of manufacture. The assembly marking shall be produced by the use of a nonconductive, fungistatic ink, or paint applied to the printed wiring board, or to a label which is applied to the printed wiring board, or by mechanical pencil marking, mechanical machining, or laser machining on a metallic area provided for marking purposes. All marking shall be able to withstand solder fluxes, cleaning solutions, and molten solder encountered in the assembly of printed boards, shall remain legible after all tests, and in no manner affect the performance of the completed assembly.

* N.3.1.4 Marking of printed boards and assemblies to identify lead (Pb), lead-free (Pb-free) and other attributes. Suppliers whose customers require marking or labeling of the printed board or assembly to indicate the materials used in the manufacturing of assemblies shall utilize the material category codes identified in J–STD–609. The material category code categories identified in J–STD–609 cover the following: the printed board base material, the surface finish of the printed board, the solder paste/solder used on an assembly; and the conformal coating used on an assembly. If the printed board of the assembly was marked with the category codes for solders and/or conformal coating and during the manufacturing of the assembly, the materials used do not match those codes, then the completed assembly shall be remarked using the correct material category codes.

* N.3.1.4.1 Marking sequence. The sequence of marking, when required, shall be as follows:

a. The base material used and when applicable, if the base material is halogen-free.

b. The printed board surface finish.

c. The reflow, wave, and other solders used to attach components.

d. The conformal coating (if applicable).

APPENDIX O

FSC 5999 - ELECTRICAL AND ELECTRONIC COMPONENTS, MISCELLANEOUS DELAY LINES

O.1 SCOPE

O.1.1 Scope. The following define the requirements that pertain to both commercial and military electronic devices. Where the requirements are not stated, refer to sections 4 and 5 herein. This appendix is a mandatory part of this standard. The information contained herein is intended for compliance.

This appendix establishes the marking requirements that apply to a specific FSC. These requirements are to be applied in addition to the requirements of sections 4 and 5 herein. In the event of conflict between this appendix and section 4 or 5, the appendix shall take precedence.

O.2 APPLICABLE DOCUMENTS. This section is not applicable to this appendix.

O.3 GENERAL REQUIREMENTS

O.3.1 Parts identification marking.

O.3.1.1 Mounting pads, gaskets, and heat sinks marking. Mounting pads, gaskets, and heat sinks do not require marking of parts.

O.3.1.2 Method I marking. Unless otherwise specified in the acquisition document, marking of delay lines shall conform to method I.

a. “JAN” or “J” marking.

b. Military part number.

c. Index mark identification (next to pin 1, input).

d. Manufacturer’s source code or logo.

e. Date code.

Custodians:
Army - CR
Navy - EC
Air Force - 85
DLA - CC

Preparing activity:
DLA - CC

Review activities:
NASA - NA

(Project 59GP-2010-008)

NOTE: The activities listed above were interested in this document as of the date of this document. Since organizations and responsibilities can change, you should verify the currency of the information above using the ASSIST Online database at https://assist.daps.dla.mil.