INCH-POUND

MIL-R-83407D
29 September 2014
SUPERSEDING
MIL-R-83407C
20 May 2009

MILITARY SPECIFICATION

RELAYS, REED (MERCURY WETTED) GENERAL SPECIFICATION FOR

Inactive for new design after 28 June 1996.
No superseding specification.

This specification is approved for use by all Departments and Agencies of the Department of Defense.

1. SCOPE

1.1 Scope. This specification establishes the general requirements for mercury wetted reed relays that perform the switching functions associated with ground control support equipment. These relays are not be used in shipboard or airborne applications.

2. APPLICABLE DOCUMENTS

2.1 General. The documents listed in this section are specified in sections 3 and 4 of this specification. This section does not include documents cited in other sections of this specification or recommended for additional information or as examples. While every effort has been made to ensure the completeness of this list, document users are cautioned that they must meet all specified requirements of documents cited in sections 3 and 4 of this specification, whether or not they are listed.

2.2 Government documents.

2.2.1 Specifications, standards, and handbooks. The following specifications, standards, and handbooks form a part of this document to the extent specified herein. Unless otherwise specified, the issues of these documents are those cited in the solicitation or contract.

DEPARTMENT OF DEFENSE SPECIFICATIONS

MIL-R-83407/3 - Relays, Reed (Mercury Wetted), Solder Seal, 0 To 7.5 Volt Amperes.

DEPARTMENT OF DEFENSE STANDARDS

MIL-STD-202 - Electronic and Electrical Component Parts.
MIL-STD-1285 - Marking of Electrical and Electronic Parts.

(Copies of these documents are available online at http://quicksearch.dla.mil.)

Comments, suggestions or questions on this document should be addressed to DLA Land and Maritime, ATTN: VAT, Post Office Box 3990, Columbus, OH 43218-3990, or emailed to relay@dla.mil. Since contact information can change, you may want to verify the currency of this address information using the ASSIST Online database at https://assist.dla.mil.

2.3 Non-Government publications. The following documents form a part of this document to the extent specified herein. Unless otherwise specified, the issues of these documents are those cited in the solicitation or contract.

AMERICAN SOCIETY FOR TESTING AND MATERIALS (ASTM)

ASTM G 21 - Standard Practice for Determining Resistance of Synthetic Polymeric Materials to Fungi.

(Copies of this document are available from www.astm.org.)

INTERNATIONAL ORGANIZATION FOR STANDARDS (ISO)

ISO 10012 - Measurement Management Systems - Requirements for Measurement Processes and Measuring Equipment.

ISO/IEC 17025 - Calibration of Measuring and Test Equipment, Requirements for.

(Copies of this document are available from www.iso.org.)

2.4 Order of precedence. Unless otherwise noted herein or in the contract, in the event of a conflict between the text of this document and the references cited herein (except for related specification sheets), the text of this document takes precedence. Nothing in this document, however, supersedes applicable laws and regulations unless a specific exemption has been obtained.

3. REQUIREMENTS

3.1 Specification sheets. The individual item requirements shall be as specified herein and in accordance with the applicable specification sheet. In the event of any conflict between the requirements of this specification and the specification sheet, the latter shall govern.

3.2 First article. When specified (see 6.2), a sample of parts shall be subjected to first article inspection (see 6.3) in accordance with 4.3.

3.3 Materials. Materials shall be as specified herein. However, when a definite material is not specified, a material shall be used which will enable the relay to meet the performance requirements of this specification. Materials used shall be self-extinguishing and shall not support combustion, give off noxious gases in harmful quantities, give off gases in quantities sufficient to cause explosion of sealed enclosures, cause contamination of the contacts or other parts of the relay, or form current carrying tracks when subjected to any of the tests specified herein. Unless otherwise specified (see 3.1), the selection of material shall be such as to provide a shelf life of at least 2 years without adversely affecting the operation of the relay. Acceptance or approval of any constituent material shall not be construed as a guaranty of the acceptance of the finished product.

3.3.1 Plastic. Plastic shall be of such quality as to ensure that the relay meets all the performance requirements of this specification

3.3.2 Ceramic. Ceramic insulating material shall be of such quality as to ensure that the relay meets all the performance requirements of this specification. Ceramic used for external surfaces shall be glazed.

3.3.3 Base metals. Base metals shall be of a corrosion-resistant type or shall be plated or treated to resist corrosion.

3.3.4. Magnet wire. Magnet wire used shall enable the relay to meet the performance requirements of this specification.

3.3.5 Rubber. Rubber shall be of such quality as to ensure that the relay meets all the performance requirements of this specification.

3.3.6 Fungus resistance. Materials used in the construction of relays shall be fungus inert in accordance with ASTM G 21.

3.4. Interface and construction. Relays shall be of the design, construction, weight, and physical dimensions specified (see 3.1). Relays shall be designed to ensure proper operation when mounted as specified (see 3.1).

3.4.1 Enclosures. When specified (see 3.1), relays shall be provided with a metal enclosure for shielding and magnetic path purposes. When specified, provisions shall be provided for electrically grounding the enclosure.

3.4.2 Encapsulation. Unless otherwise specified (see 3.1), relays shall be encapsulated.

3.4.3 Contacts. Contacts shall have the load ratings and arrangements as specified (see 3.1), and shall be capable of carrying the maximum rated current continuously, provided an appropriate arc suppression circuit is connected across each pair of contacts.

3.4.4 Coils. Coils shall be insulated electrically from the frame, the contacts, and the enclosure and shall be designed for continuous operation at the rated voltage. The resistance and rated voltage shall be as specified (see 3.1).

3.4.4.1 Terminal identification. Unless otherwise specified (see 3.1), a contrasting colored bead shall be used to designate X_1 (positive, if applicable) terminal.

3.4.5 Circuit diagram. The circuit diagram shall be as specified (see 3.1).

3.4.6 Temperature range. The operating temperature range shall be as specified (see 3.1).

3.5 Solderability (applicable to solder terminals). When relays are tested as specified in 4.5.2, the dipped surface of solid wire-lead and pin terminals shall be at least 95 percent covered with a continuous new solder coating in accordance with method 208 of MIL-STD-202.

3.6 Dielectric withstanding voltage. When relays are tested as specified in 4.5.3, they shall withstand the specified voltage (see 3.1) without damage. The leakage current shall not exceed 1 milliampere (mA) and there shall be no evidence of damage due to arcing (air discharge), flashover (surface discharge), or insulation breakdown (puncture discharge).

3.7 Insulation resistance. When relays are tested as specified in 4.5.4, the insulation resistance shall be as specified (see 3.1).

3.8 DC coil resistance. When relays are tested as specified in 4.5.5, the dc coil resistance shall be as specified (see 3.1).

3.9 Pickup and dropout voltage. When relays are tested as specified in 4.5.6, the pickup and dropout voltage shall be as specified (see 3.1).

3.10 Coil power dissipation (when specified) (see 3.1). When relays are tested as specified in 4.5.7, the power dissipated shall be as specified (see 3.1).

3.11 Contact resistance. When relays are tested as specified in 4.5.8, the contact resistance of any pair of mated contacts shall not exceed the specified value (see 3.1).

3.12 Operate and release time. When relays are tested as specified in 4.5.9, the operate and release time shall be as specified (see 3.1).

3.13 Coil inductance (when specified) (see 3.1). When relays are tested as specified in 4.5.10, the coil inductance shall be as specified (see 3.1).

3.14 Contact noise (when specified) (see 3.1). Relays shall be tested as specified in 4.5.11. The peak to peak ratings for the bandwidth (dc to 10 kilohertz (kHz)) shall be 400 microvolts (μV) at closure, 200 μV at 1.5 milliseconds (ms), 125 μV at 2 ms, 60 μV at 2.5 ms, 35 μV at 3 ms, 15 μV at 4 ms, and 10 μV at 5 ms.

3.15 Thermal EMF (when specified) (see 3.1). When relays are tested as specified in 4.5.12, the thermal EMF shall be as specified (see 3.1).

3.16 Capacitance (when specified) (see 3.1). When relays are tested as specified in 4.5.13, the capacitance shall be as specified (see 3.1).

3.17 Thermal shock (high and low temperature operation). When relays are tested as specified in 4.5.14, they shall meet the following requirements at each temperature extreme.

Insulation resistance - - - - - - - - - - - - - -	As specified in 3.7. At high temperature, insulation resistance between coil and enclosure shall be 500 megohms (mΩ) minimum.
Pickup and dropout voltage - - - - - - - - -	As specified in 3.9.
Operate and release time - - - - - - - - - -	As specified in 3.12.
Visual examination - - - - - - - - - - - - - - -	No cracking, peeling, or flaking of the finish is allowed.

Following this test, dielectric withstanding voltage shall be as specified in 3.6.

3.18 Shock (specified pulse) (nonoperating). When relays are tested as specified in 4.5.15, there shall be no evidence of mechanical or electrical damage. Following this test, the dielectric withstanding voltage, contact resistance, and pickup and dropout voltages shall be as specified in 3.6, 3.11, and 3.9, respectively.

3.19 Vibration (nonoperating). When relays are tested as specified in 4.5.16, there shall be no evidence of breaking, cracking, chipping, or flaking of the finish or loosening of the terminals. Following this test, the dielectric withstanding voltage, contact resistance, and the pickup and dropout voltage shall be as specified in 3.6, 3.11, and 3.9, respectively.

3.20 Moisture resistance (when specified) (see 3.1). When relays are tested as specified in 4.5.17, there shall be no evidence of breaking, cracking, chipping, or flaking of the finish or loosening of the terminals. Immediately after step 6 of the final cycle, the insulation resistance shall be 100 MΩ or more. After the 24 hour drying period, the dielectric withstanding voltage, insulation resistance, contact resistance, and pickup and dropout voltages shall be as specified in 3.6, 3.7, 3.11, and 3.9, respectively.

3.21 Magnetic interference. When relays are tested as specified in 4.5.18, the pickup and dropout values shall be within the limits specified (see 3.1).

3.22 Resistance to soldering heat. When relays are tested as specified in 4.5.19, the insulation resistance, contact resistance, pickup and dropout voltage, and dc coil resistance shall be as specified in 3.7, 3.11, 3.9, and 3.8, respectively.

3.23 Salt spray (corrosion). When relays are tested as specified in 4.5.20, there shall be no evidence of breaking, cracking, chipping, or flaking of the finish, or exposure of the base metal due to corrosion, which would adversely affect the performance of the relay.

3.24 Terminal strength. When relays are tested as specified in 4.5.21, terminals shall be as specified (see 3.1) and there shall be no evidence of loosening or breaking of the terminals or other damage that could adversely affect the normal operation of the relays. Bending of printed circuit terminals shall not be construed as damage, provided they can be satisfactorily reformed to their original configuration.

3.25 Life. When relays are tested as specified in 4.5.22, they shall remain electrically operative and no mechanical damage shall exist. During and following this test, the relays shall meet the following requirements:

DC coil resistance - - - - - - - - - - - - - - - - -	As specified in 3.8.
Contact resistance - - - - - - - - - - - - - - - -	As specified in 3.11.
Pickup and dropout voltage - - - - - - - - - -	As specified in 3.9.
Operate and release time - - - - - - - - - - -	As specified in 3.12.
Dielectric withstanding voltage- - - - - - - -	As specified in 3.6.
Insulation resistance - - - - - - - - - - - - - -	As specified in 3.7.

3.26 Marking. Relays shall be marked in accordance with MIL-STD-1285 with the following information, as a minimum:

a. Military Part or Identifying Number (PIN).

b. Circuit diagram (see 3.1).

c. CAGE (FSCM) and date codes.

d. Position direction arrow ↑.

e. Rated coil voltage.

3.27 Soldering. Electrical connections shall be mechanically secure and electrically continuous before and after soldering.

3.28 Screening (when specified) (see 3.1).

3.28.1 Temperature cycling. Each relay shall be tested as specified in 4.5.23.1.

3.28.2 ARC duration. Each relay shall be tested as specified in 4.5.23.2. The ARC duration shall not exceed 200 microseconds (µs) on turn off.

3.29 Recycled, recovered, environmentally preferable, or biobased materials. Recycles, recovered, environmentally preferable, or biobased materials should be used to the maximum extent possible, provided that the material meets or exceeds the operational and maintenance requirements, and promotes economically advantageous life cycle costs.

3.30 Pure tin. The use of pure tin, as an underplate or final finish, is prohibited both internally and externally. Tin content of (product) and solder shall not exceed 97 percent, by mass. Tin shall be alloyed with a minimum of 3 percent lead, by mass (see 6.5).

3.31 Workmanship. Relays shall be uniform in quality, and shall be free from cracks, displaced parts, sharp edges, burrs, and other defects that could affect their life, serviceability, or appearance.

4. VERIFICATION

4.1 Test equipment and inspection facilities. The supplier shall establish and maintain a calibration system in accordance with ISO/IEC 17025, ISO10012, or equivalent.

4.2 Classification of inspections. The inspection requirements specified herein are classified as follows:

a. First article inspection (see 4.3).

b. Conformance inspection (see 4.4).

4.3 First article inspection. First article inspection shall be performed at a laboratory acceptable to the Government (see 6.3) on sample relays produced with equipment and procedures normally used in production.

4.3.1 Sample size. Eleven relays shall be selected at random and subjected to the first article inspection.

4.3.2 Inspection routine. The sample shall be subjected to the inspections specified in table I, in the order shown. All sample units shall be subjected to group I inspection, except that only 2 sample relays shall be subjected to solderability, contact noise (when specified), thermal EMF (when specified), and capacitance (when specified). Upon completion of the group I tests, the sample shall be subdivided as specified in table I for group II, group III, and group IV.

4.3.3 Defectives. Defective relays in excess of the number allowed in table I shall be cause for refusal to grant approval.

TABLE I. First article inspection. 1/

Examination or test 2/	Requirement paragraph	Test paragraph	Number of sample relays to inspect	Number of failures permitted
Group I				
Screening (when specified) (see 3.1) ------	3.28	4.5.23	2	0
Solderability ----------	3.5	4.5.2	2 1/	1
Visual and mechanical examination (external) ----------	3.1, 3.3, 3.4, 3.26, and 3.30	4.5.1	All relays in sample (11 total 3/)	
Dielectric withstanding voltage ----------	3.6	4.5.3		
Insulation resistance ----------	3.7	4.5.4		
DC coil resistance ----------	3.8	4.5.5		
Pickup and dropout voltage ----------	3.9	4.5.6		
Coil power dissipation (when specified) ---	3.10	4.5.7		
Contact resistance ----------	3.11	4.5.8		
Operate and release time ----------	3.12	4.5.9		
Coil inductance (when specified) ----------	3.13	4.5.10		
Contact noise (when specified) ----------	3.14	4.5.11	2 1/	
Thermal EMF (when specified) ----------	3.15	4.5.12		
Capacitance (when specified) ----------	3.16	4.5.13		
Group II				
Thermal shock (high and low temperature operation) ----------	3.17	4.5.14	3	1
Shock (specified pulse) (nonoperating) ---	3.18	4.5.15		
Vibration (nonoperating) ----------	3.19	4.5.16		
Moisture resistance (when specified) ------	3.20	4.5.17		
Visual and mechanical examination (external) ----------	3.1, 3.3, 3.4 3.26, and 3.30	4.5.1		
Group III				
Magnetic interference ----------	3.21	4.5.18	3	1
Resistance to soldering heat ----------	3.22	4.5.19		
Salt spray (corrosion) ----------	3.23	4.5.20		
Terminal strength ----------	3.24	4.5.21		
Group IV				
Life ----------	3.25	4.5.22	4	0

1/ Select the specified number of relays at random from the 11 sample units.

2/ A test procedure (such as dielectric withstanding voltage) required at the conclusion of a procedure shall be known as a post-test of that procedure. Some post-tests are required to be repeated on sample units as post-tests for more than one test procedure. At the option of the manufacturer, such post-testing shall be required only at the conclusion of the life test.

3/ One additional sample unit is included in each sample of 11 sample units to permit substitution for the failures allowed in group I.

4.4 Conformance inspection.

4.4.1 Inspection of product for delivery. Inspection of product for delivery shall consist of the group A inspection.

4.4.1.1 Inspection lot. An inspection lot, as far as practicable, shall consist of all relays covered by a single specification sheet produced under essentially the same conditions within a period not to exceed 4 weeks, or 500 units, whichever occurs first, and offered for inspection at one time.

4.4.1.2 Group A inspection. Group A inspection shall consist of the examinations and tests specified in table II.

4.4.1.2.1 Sampling plan. The tests in table II shall be performed on each relay offered for inspection.

4.4.1.2.2 Rejected lots.

a. Subgroup 1. If over 10 percent of an inspection lot fails, the relays contained in that lot shall be rejected and shall not be resubmitted for inspection. Relays which have failed to pass subgroup 1 tests to which they have been subjected shall be removed from the lot and discarded.

b. Subgroup 2. If an inspection lot is rejected, the contractor may rework it to correct the defects, or screen out the defective units and resubmit the lot for inspection.

4.4.1.2.3 Disposition of sample units. Sample relays which have passed all the group A inspections may be delivered on the contract or purchase order if the lot is accepted and the sample relays are still within the specified electrical tolerances.

TABLE II. Group A inspection.

Examination or test 1/	Requirement paragraph	Test paragraph	Inspection and disposition
Subgroup I			
Screening (when specified) ----------	3.28	4.5.23	100 percent inspections. Discard all failed relays
Dielectric withstanding voltage ---------	3.6	4.5.3	
Insulation resistance ----------	3.7	4.5.4	
DC coil resistance ----------	3.8	4.5.5	
Pickup and dropout voltage ----------	3.9	4.5.6	
Coil power dissipation (when specified)	3.10	4.5.7	
Contact resistance ----------	3.11	4.5.8	
Operate and release time ----------	3.12	4.5.9	
Subgroup II			
Visual and mechanical examination (external) 2/ ----------	3.1, 3.3, 3.4, 3.26, and 3.30	4.5.1	100 percent inspections. Discard all failed relays

1/ The order of performing the examinations and tests shall be as listed, except that the order of performing the electrical characteristics tests is optional.

2/ Physical dimensions and weight shall be checked on only two relays selected at random from each lot.

4.5 Methods of examination and test. When applicable, testing of relays with plug-in terminations shall be performed with the appropriate connector mated to the relay. When it is necessary to monitor contact operation during the specified testing, the contact monitor used shall not load the respective contact in excess of .10 watt. A NE-2 neon lamp in series with a 100,000 ohm resistor represents a suitable contact monitoring device.

4.5.1 Visual and mechanical examination (external). Relays shall be examined to verify that the external design and construction, physical dimensions, materials, marking, and workmanship are in accordance with the applicable requirements (see 3.1, 3.3, 3.4, 3.26, and 3.30).

4.5.2 Solderability (applicable to solder terminals) (see 3.5). Relays shall be tested in accordance with method 208 of MIL-STD-202. The following details apply:

a. Number of terminations of each part to be tested: All.

b. Depth of immersion in flux and solder: Leads shall be immersed to within .063 inch (1.60 mm) of the seal or case.

4.5.3 Dielectric withstanding voltage (see 3.6). Relays shall be tested in accordance with method 301 of MIL-STD-202. The following details apply:

a. Points of application and magnitude of test voltage: See 3.1.

b. Maximum leakage current: 1.0 mA.

c. Duration of application: 60 seconds for qualification; 5 seconds for group A tests.

d. Examinations following tests: Relays shall be examined for evidence of arcing, flashover, insulation breakdown, and damage.

4.5.4 Insulation resistance (see 3.7). Relays shall be tested in accordance with method 302 of MIL-STD-202. The following details apply:

a. Test condition letter: A for relays with coil and contact ratings below 60 volts, and B for all others.

b. Points of measurement: See 3.1.

4.5.5 DC coil resistance (see 3.8). Relays shall be tested in accordance with method 303 of MIL-STD-202.

4.5.6 Pickup and dropout voltage (see 3.9). Relays shall be measured as specified in 4.5.6.1 and 4.5.6.2. The relay mounting position shall be as specified in 3.1. A suitable indicating device shall be used to monitor contact operation.

4.5.6.1 Pickup voltage. Rated voltage shall be applied to the coil for a period of 1 to 3 seconds. The voltage shall be gradually reduced to zero, then gradually increased until the relay operates. The pickup voltage shall be measured at this point.

4.5.6.2 Dropout voltage. Rated voltage shall be applied to the coil. The voltage shall be gradually reduced until the contacts return to the deenergized position. The dropout voltage shall be measured at this point.

4.5.7 Coil power dissipation (when specified) (see 3.1 and 3.10). Relays shall have the coil energized with rated voltage (see 3.1) with the relay stabilized at 25°C ±5°C. The coil power shall be measured within the first minute.

4.5.8 Contact resistance (see 3.11). Relays shall be tested in accordance with method 307 of MIL-STD-202. The following details and exceptions apply:

a. Method of connection: Between the measuring apparatus and the relay terminals (for relays with wire lead terminals, this measurement shall be made .5 ±.094 inch (12.7 ± 2.39 mm)from the emergence of the lead from the relay). Voltage-sensing leads shall be connected in such a way as to exclude the resistance of the current-carrying leads.

b. Test load: 100 mA at 6 V dc.

c. Points of measurement: All mated contacts in their closed position; the coil shall be energized with rated voltage if necessary to effect contact closure.

d. Number of activations prior to measurement: None.

e. Number of test actuations: Three (the contact load shall not be applied during contact transfer). For conformance inspection, one test actuation shall be made.

f. Number of measurements per actuation: One in each closed contact position.

4.5.9 Operate and release times (see 3.12). The operate and release times shall be measured using an oscilloscope. Rated voltage shall be applied to the coil. The circuit shown in figure 1, or equivalent, shall be used. For qualification inspection, timing measurements shall be made on all contact sets. For conformance inspection, all open contacts may be wired in series, and all closed contacts may be wired in parallel.

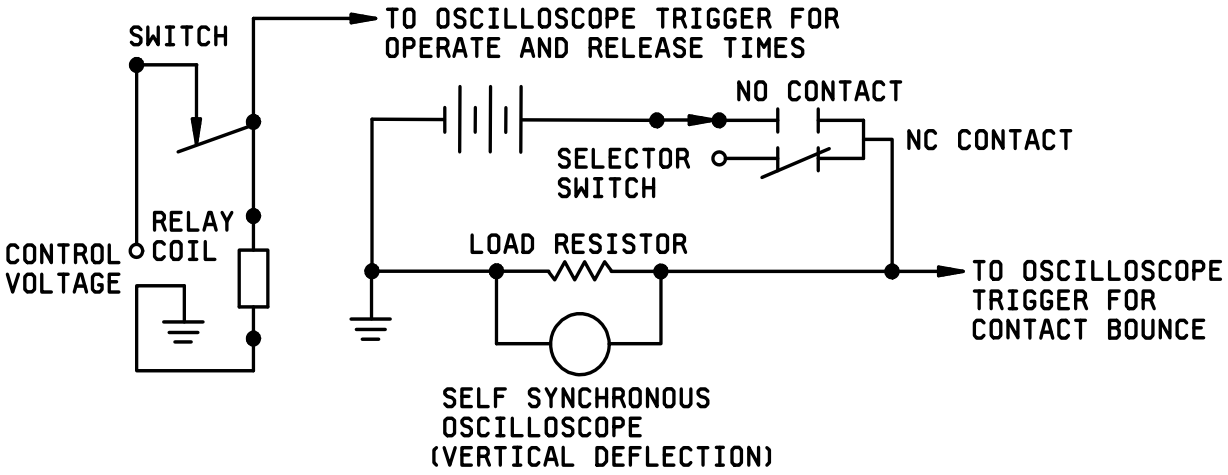

NOTE: The horizontal scan rate of the oscilloscope shall show the required pertinent data.

FIGURE 1. Typical circuit for operate and release times.

4.5.10 Coil inductance (when specified) (see 3.1 and 3.13). Coil inductance shall be measured at 1,000 Hz, using a conventional impedance bridge.

4.5.11 Contact noise (when specified) (see 3.1 and 3.14). Contact noise shall be measured using the test circuit shown in figure 2. The relays shall be operated with rated voltage at a rate of 60 to 100 Hz with "on" and "off" time approximately equal. The input filter bandwidth of the oscilloscope shall be set at 600 Hz to 100 kHz. An oscilloscope, such as a Tektronix Incorporated type 561A, with type 2A61 plug-in or equivalent, shall be used, with its time scale adjusted to 2 ms per centimeter and its gain control adjusted for adequate deflection. The peak to peak voltage shall be measured and the oscilloscope trace shall be recorded using an oscilloscope record camera.

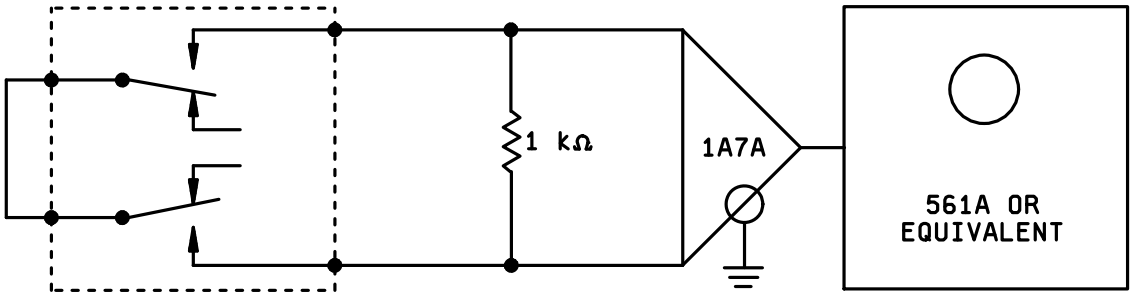

FIGURE 2. Contact noise test circuit.

4.5.12 Thermal EMF (when specified) (see 3.1 and 3.15). Thermal EMF shall be measured on each contact which closes when the relay is energized and deenergized respectively. Rated voltage shall be used to energize the relay. Each thermal EMF measurement shall be made for approximately 30 minutes after the relay is energized or deenergized. When the relay incorporates more than one contact pole, as many as two closed contacts may be connected in series and measured at a given time. A suitable test circuit is shown in figure 3 for two contacts in series.

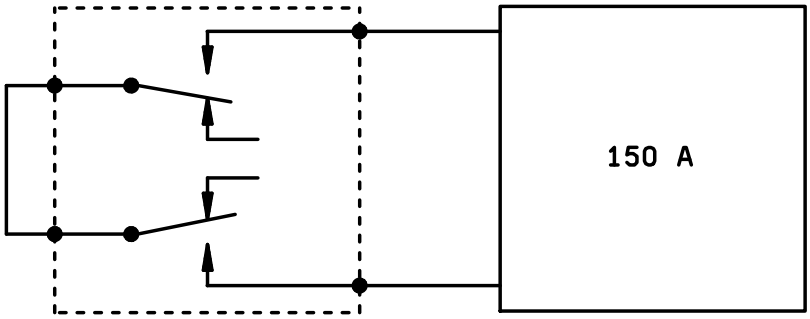

FIGURE 3. Thermal EMF test circuit.

4.5.13 Capacitance (when specified) (see 3.1 and 3.16). Relays shall be tested in accordance with method 305 of MIL-STD-202. The following details apply:

a. Test frequency: 1 kHz.

b. Points of measurement: See 3.1.

4.5.14 Thermal shock (high and low temperature operation) (see 3.17). Relays shall be tested in accordance with method 107 of MIL-STD-202. The following details and exceptions apply:

a. Special mounting: Relays shall be suspended in the test chamber by twine or other nonheat- conducting material, in a plane parallel to the normal air flow. Test leads may be used for mounting; however, they shall not provide a heat sink.

b. Test condition: B, except temperature range shall be as specified (see 3.1), and exposure time at temperature extreme during the fifth cycle shall be 2 hours each.

c. Measurements at each temperature extreme during steps 1 and 3 of the fifth at the end of each temperature exposure, and with the relays still in the conditioning chamber, the insulation resistance, pickup and dropout voltages, and operate and release times, shall be measured as specified in 4.5.4, 4.5.6, and 4.5.9, respectively.

d. Measurements after cycling: Relays shall be visually examined for cracking, peeling, and flaking of the finish. The dielectric withstanding voltage shall then be measured as specified in 4.5.3.

4.5.15 Shock (specified pulse) (nonoperating) (see 3.18). Relays shall be tested in accordance with method 213 of MIL-STD-202. The following details and exceptions apply:

a. Mounting method: Rigidly mounted by normal mounting means. (Relays designed without mounting provisions shall be rigidly secured to a suitable nonmagnetic mounting plate by means of potting or adhesive applied between the top of the relay and the mounting plate.)

b. Test condition: A, except peak value shall be 10 g's.

c. Electrical load conditions: The coil shall be deenergized and the contacts shall not be loaded or monitored for chatter and closure.

d. Measurements and examinations after shock: Dielectric withstanding voltage, contact resistance, and pickup and dropout voltages shall be measured as specified in 4.5.3, 4.5.8, and 4.5.6, respectively. Relays shall then be examined for loosening of parts.

4.5.16 Vibration (nonoperating) (see 3.19). Relays shall be tested in accordance with method 204 of MIL-STD-202. The contacts shall not be loaded or monitored for chatter or closure during vibration. The following details apply:

a. Mounting: Same as 4.5.15a.

b. Test condition: A, except amplitude shall not exceed 5 g's and frequency range shall be 10 to 300 Hz.

c. Measurements: Same as 4.5.15d.

4.5.17 Moisture resistance (when specified) (see 3.1) (see 3.20). Relays shall be tested in accordance with method 106 of MIL-STD-202. The following details and exceptions apply:

a. Mounting: On a corrosion-resistant panel by normal mounting means.

b. Initial measurement: Not applicable.

c. Loading voltage: Not applicable.

d. Final measurements: Upon completion of step 6 of the final cycle, insulation resistance shall be measured as specified in 4.5.4. After a 24 hour drying period at a relative humidity of 50 ±5 percent, dielectric withstanding voltage shall be measured as specified in 4.5.3, except that the test voltage shall be 90 percent of the initial potential. The insulation resistance, contact resistance, and pickup and dropout voltages shall be measured as specified in 4.5.4, 4.5.8, and 4.5.6, respectively.

e. Examination after test: Relays shall be examined for evidence of breaking, cracking, chipping, or flaking of the finish, and loosening of the terminals.

4.5.18 Magnetic interference (see 3.21). The relay under test and eight similar relays shall be mounted in the same physical orientation by nonmagnetic means, as shown in figure 4. Unless otherwise specified, grid-spaced relays shall be mounted so that all terminals are positioned in the closest possible grid pattern. Unless otherwise specified, the spacing between terminals and the tops of the adjacent terminals shall be as shown in figure 4. Pickup and dropout voltages (or current) shall be measured on the relay under test as specified in 4.5.6 with the coils of the eight outer relays energized at rated voltage (the magnetic polarity of each relay shall be similarly oriented) (see 6.4). This measurement shall be repeated with the coils of the eight outer relays deenergized.

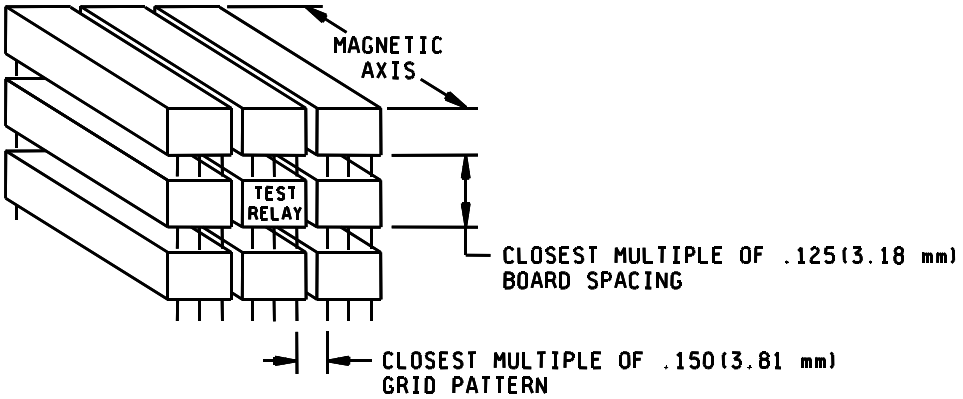

FIGURE 4. Mounting array for adjacent similar relays.

4.5.19 Resistance to soldering heat (see 3.22). Relays shall be tested in accordance with method 210 of MIL-STD-202. The following details and exceptions apply:

a. Depth of immersion in molten solder: Within .060 ±.020 inch (1.52 ± 0.51 mm)of the relay base.

b. Test condition: B.

c. Measurements after test: Insulation resistance, contact resistance, pickup and dropout voltage, and dc coil resistance shall be measured as specified in 4.5.4, 4.5.8, 4.5.6, and 4.5.5, respectively.

4.5.20 Salt spray (corrosion) (see 3.23). Relays shall be tested in accordance with method 101 of MIL-STD-202. The following details and exceptions apply:

a. Applicable salt solution: 5 percent.

b. Test condition: B.

c. Examination after test: Relays shall be examined for evidence of peeling, chipping, flaking of the finish, and exposure of base material due to corrosion.

4.5.21 Terminal strength (see 3.24). Relays shall be tested in accordance with test condition A, method 211, MIL-STD-202. The force shall be as specified (see 3.1) and only two terminals per relay shall be tested.

4.5.22 Life (see 3.25). Each sample relay shall be life tested for a minimum of 50 million operations. The following details apply:

a. Test temperature: Room temperature.

b. Mounting position: During the performance of all the tests specified herein, the relays shall be positioned, unless otherwise specified (see 3.1), with the long side of the header vertical and with the terminals horizontal and with the NO and NC terminals at the top.

c. Arc suppression: An external arc suppression circuit shall be electrically connected to each pair of contacts which make and break during the life test.

d. Energizing voltage: The rated voltage (see 3.1) shall be used to energize the coil.

e. Cycling rate: The cycling rate shall not be less than 40 Hz or more than 80 Hz. "On" and "off" periods shall be approximately equal.

f. Contact load: The contact load shall be one ampere resistive at an open circuit voltage of 100 V dc, unless otherwise specified (see 3.1). A load resistor shall be connected between each stationary contact and the positive terminal of the load power supply. The negative terminal of the load power supply shall be connected to the movable contact terminal. Unless otherwise specified (see 3.1), a contact protective circuit consisting of a 0.1 microfarad capacitor connected in series with a 10 ohm resistor shall be connected across each stationary contact and the respective movable contact. Connect the outer end of the resistor to the stationary contact terminal and the outer end of the capacitor to the respective movable contact terminal. Keep the resistor and capacitor leads and the contact power leads as short as practicable. Route the contact power supply leads as far away from one another as practicable to minimize lead capacitance.

g. Contact monitoring: The contacts shall not be monitored during the actual life cycling.

h. Periodic measurements: Upon completion of each 5 million operations, the life cycling shall be stopped and the electric power removed from the relays for approximately one hour. Then perform the dc coil resistance, contact resistance, pickup and dropout voltage, and operate and release time tests as specified in 4.5.5, 4.5.8, 4.5.6, and 4.5.9, respectively. The dielectric withstanding voltage and insulation resistance tests, as specified in 4.5.3 and 4.5.4, shall also be performed at the end of the life cycling (50 million operations). The relays shall then be externally examined to verify that no physical damage exists.

4.5.23 Screening (when specified) (see 3.1).

4.5.23.1 Temperature cycling (see 3.28.1). Each relay shall be subjected to 60 temperature cycles. (60 cycles x 4 hours = 240 hours) (see figure 5).

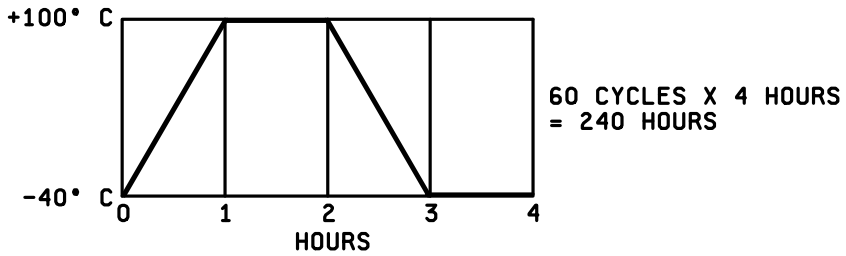

FIGURE 5. Temperature cycling.

4.5.23.2 ARC duration (see 3.28.2). Each relay shall be subjected to a minimum of 100,000 operations at a rate of 60 operations per second with 1 ampere resistive load at 24 V dc. Dynamic switching characteristics shall be tested as shown in figure 6. Observe the oscilloscope for turnoff characteristics and reject any relay that exhibits an ARC duration greater than specified in 3.28.2.

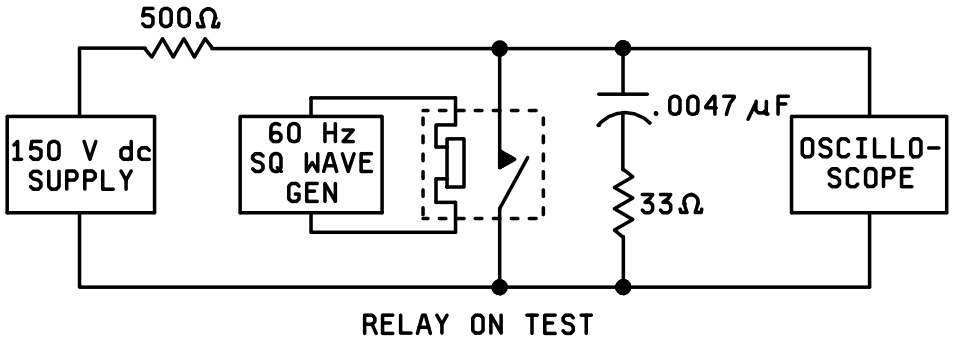

FIGURE 6. ARC duration.

5. PACKAGING

5.1 Packaging. For acquisition purposes, the packaging requirements shall be as specified in the contract or order (see 6.2). When packaging of materiel is to be performed by DoD or in-house contractor personnel, these personnel need to contact the responsible packaging activity to ascertain packaging requirements. Packaging requirements are maintained by the Inventory Control Point's packaging activities within the Military Service or Defense Agency, or within the military service's system commands. Packaging data retrieval is available from the managing Military Department's or Defense Agency's automated packaging files, CD-ROM products, or by contacting the responsible packaging activity.

6. NOTES

(This section contains information of a general or explanatory nature that may be helpful, but is not mandatory.)

6.1 Intended use. Relays conforming to this specification are intended for use in dc or ac (single or polyphase) ground support electronic and communication equipment as a means of controlling the making and breaking of circuits for electrically operated equipment and devices.

CAUTION: Contacts should not be paralleled on the assumption that doing so will increase their switching capacity. Being paralleled for the sake of redundancy may result in make before break, due to one transfer contact operating slightly ahead of the other.

6.2 Acquisition requirements. Acquisition documents must specify the following:

a. Title, number, and date of the specification.

b. Issue of ASSIST to be cited in the solicitation, and if required, the specific issue of individual documents referenced (see 2.2).

c. Title, number, and date of the applicable specification sheet and the specification sheet PIN.

d. Requirements for first article inspection (see 4.3).

e. Packaging requirements (see 5.1).

6.3 First article. When first article inspection is required, the contracting officer should provide specific guidance to offerors whether the item(s) should be a preproduction sample, a first article sample, a first production item, a sample selected from the first 13 production items, a standard production item from the contractor's current inventory (see 3.2), and the number of items to be tested as specified in 4.3. The contracting officer should also include specific instructions in acquisition documents regarding arrangements for examinations, approval of first article test results, and disposition of first articles. Invitations for bids should provide that the Government reserves the right to waive the requirement for samples for first article inspection to those bidders offering a product which has been previously acquired or tested by the Government, and that bidders offering such products, who wish to rely on such production or test, must furnish evidence with the bid that prior Government approval is presently appropriate for the pending contract. Bidders should not submit alternate bids unless specifically requested to do so in the solicitation.

6.4 Magnetic orientation. Magnetic orientation of a relay may be determined by energizing the coil with a known polarity and checking for attraction or repulsion of a permanent magnet to an external surface of the relay.

6.5 Tin whisker growth. The use of alloys with tin content greater than 97 percent, by mass, may exhibit tin whisker growth problems after manufacture. Tin whiskers may occur anytime from a day to years after manufacture and can develop under typical operating conditions, on products that use such materials. Conformal coatings applied over top of a whisker-prone surface will not prevent the formation of tin whiskers. Alloys of 3 percent lead, by mass, have shown to inhibit the growth of tin whiskers. For additional information on this matter, refer to ASTM-B545 (Standard Specification for Electrodeposited Coatings of Tin).

6.6 Subject term (key word) listing.

Arc duration
Contact noise

6.7 Environmentally preferable material. Environmentally preferable materials should be used to the maximum extent possible to meet the requirements of this specification. As of the dating of this document, the U.S. Environmental Protection Agency (EPA) is focusing efforts on reducing 31 priority chemicals. The list of chemicals and additional information is available on their website at http://www.epa.gov/osw/hazard/wastemin/priority.htm. Included in the list of 31 priority chemicals are cadmium, lead, and mercury. Use of these materials should be minimized or eliminated unless needed to meet the requirements specified herein (see Section 3).

6.8 Changes from previous issue. The margins of this specification are marked with vertical lines to indicate where changes from the previous issue were made. This was done as a convenience only and the Government assumes no liability whatsoever for any inaccuracies in these notations. Bidders and contractors are cautioned to evaluate the requirements of this document based on the entire content irrespective of the marginal notations and relationship to the last previous issue.

Custodians:
Air Force - 85
DLA - CC

Review activities:
Air Force – 99

Preparing activity:
DLA - CC

(Project 5945-2014-019)

NOTE: The activities listed above were interested in this document as of the date of this document. Since organizations and responsibilities can change, you should verify the currency of the information above using the ASSIST Online database at https://assist.dla.mil.