NOTICE OF CANCELLATION

INCH-POUND

MIL-R-39008C
NOTICE 3
9 January 2009
SUPERSEDING
NOTICE 2
18 September 1998

MITIARY SPECIFICATION

RESISTOR, FIXED, COMPOSITION (INSULATED), ESTABLISHED RELIABILITY, GENERAL SPECIFICATION FOR

MIL-R-39008, dated 10 August 1990, is hereby canceled. Future acquisitions for this item, the designer may consider the following alternatives:

For general applications.

MIL-PRF-22684/8 - Resistors, Fixed, Film, Insulated, Style RL42….TX.
MIL-PRF-39017/1 - Resistors, Fixed, Film (Insulated), Nonestablished Reliability, and Established Reliability, Style RLR07.
MIL-PRF-39017/2 - Resistors, Fixed, Film (Insulated), Nonestablished Reliability, and Established Reliability, Style RLR20.
MIL-PRF-39017/3 - Resistors, Fixed, Film (Insulated), Nonestablished Reliability, and Established Reliability, Style RLR32.
MIL-PRF-39017/5 - Resistors, Fixed, Film (Insulated), Nonestablished Reliability, and Established Reliability, Style RLR05.
DSCC drawing 97004 - Resistor, Fixed, Film (Insulated), 2 Watt.
DSCC drawing 98020 - Resistor, Fixed, Film (Insulated), 1/8 Watt.
DSCC drawing 98021 - Resistor, Fixed, Film (Insulated), 1/2 Watt.
DSCC drawing 98022 - Resistor, Fixed, Film (Insulated), 1 Watt.
DSCC drawing 99011 - Resistor, Fixed, Film (Insulated), 1/4 Watt.

NOTE: Designers are CAUTIONED on using the above alternative superseding resistors in high power pulse applications. Since they have not been qualified nor tested for such applications, damage and premature failure are possible. These alternative resistors only see a one time pulse (Short-time overload) as part of the group B inspection of these military specifications.

For pulse applications, the following specifications may be considered. Designers are advised to carefully review the pulse capability guidelines in these specifications in connection with the application pulse environment:

DSCC drawing 03003 - Resistor, Fixed, Carbon Film, High Pulse Voltage, 1/8 Watt.
DSCC drawing 03004 - Resistor, Fixed, Carbon Film, High Pulse Voltage, 1/4 Watt.
DSCC drawing 03005 - Resistor, Fixed, Carbon Film, High Pulse Voltage, 1/2 Watt.
DSCC drawing 03006 - Resistor, Fixed, Carbon Film, High Pulse Voltage, 1 Watt.
DSCC drawing 03007 - Resistor, Fixed, Carbon Film, High Pulse Voltage, 3/4 Watt.
DSCC drawing 03008 - Resistor, Fixed, Carbon Film, High Pulse Voltage, 2 Watt.
DSCC drawing 03009 - Resistor, Fixed, Carbon Film, High Pulse Voltage, 3 Watt.
DSCC drawing 99001 - Resistor, Fixed, Ceramic Composition (Insulted).

AMSC N/A FSC 5905
DISTRIBUTION STATEMENT A. Approved for public release; distribution is unlimited.

Custodians:
Army - CR
Navy - EC
Air Force - 85
NASA - NA

Reviewing activity:
Army - AR, AT, AV, CR4, MI
Navy - AS, MC, OS
Air Force - 19, 99

Preparing activity:
Army - CR

Agent:
DLA - CC

(Project 5905-2008-057)

NOTE: The activities listed above were interested in this document as of the date of this document. Since organizations and responsibilities can change, you should verify the currency of the information above using the ASSIST Online database at http://assist.daps.dla.mil.

INCH-POUND
MIL-R-39008C
AMENDMENT 2
21 March 1996
SUPERSEDING
AMENDMENT 1
5 May 1993

MILITARY SPECIFICATION

RESISTOR, FIXED, COMPOSITION (INSULATED),
ESTABLISHED RELIABILITY
GENERAL SPECIFICATION FOR

This amendment forms a part of MIL-R-39008C, dated 10 August 1990, and is approved for use by all Departments and Agencies of the Department of Defense.

PAGE 2

* 1.2.1.3, last sentence, delete "MS90178" and substitute "EIA-RS-385".

PAGE 3

* 2.1.1, SPECIFICATION, MILITARY, delete "MIL-R-39032" and its corresponding title.

* 2.1.1, SPECIFICATION, STANDARDS, delete "MS90178" and its corresponding title.

PAGE 4

* 2.2, before Electronic Industries Association add:

"AMERICAN NATIONAL STANDARDS INSTITUTE (ANSI)

ANSI/NCSL Z540-1 - Calibration Laboratory and Measuring and Test Equipment, General Requirements for.

(Application for copies should be addressed to the American National Standards Institute, 11 West 42nd Street, New York, NY 10036.)

"AMERICAN SOCIETY FOR TESTING AND MATERIALS (ASTM)

ASTM B545 - Standard Specification for Electrodeposited Coating of Tin.

(Application for copies should be addressed to the American Society for Testing and Materials, 1916 Race Street, Philadelphia, PA 19103.)

DISTRIBUTION STATEMENT A. Approved for public release, distributions unlimited

"INTERNATIONAL ORGANIZATION for STANDARDS (ISO)

ISO 10012-1 - Quality Assurance Requirements for Measuring Equipment, Part 1: Meteorological Confirmation System for Measuring Equipment.

(Application for copies should be addressed to the American National Standards Institute, 11 West 42nd Street, New York, NY 10036.)"

* 2.2 ELECTRONIC INDUSTRIES ASSOCIATION, add:

"EIA-RS-385 - Preferred Values (DOD Adopted)."

PAGE 6

Add the following new paragraph:

"3.5.1.4 Tin plated finishes. Use of tin plating is prohibited as a final finish and as an undercoat (see 6.6.1). Use of tin-lead (Sn-Pb) finishes are acceptable are provided that the minimum lead content is 3 percent."

PAGE 14

4.6.1.1, delete and substitute:

"4.6.1.1 Inspection and production lot.

"4.6.1.1.1 Inspection lot. An inspection lot shall consist of all the resistors of the same style, characteristic, and protective enclosure or coating manufactured under essentially the same process and conditions during a manufacturing period of one month, maximum.

"4.6.1.1.2 Production lot. A production lot shall consist of all resistors of the same style, nominal resistance value, resistance tolerance and terminal type. Manufacture of all parts in the lot shall have been started, processed, assembled, and tested as a group. Lot identity shall be maintained throughout the manufacturing cycle."

PAGE 16

4.6.1.2.4.2b, last sentence, delete and substitute: "If the lot fails this solderability test the lot may be reworked a second time and retested. If the lot fails the second rework, the lot shall be considered rejected and shall not be furnished against the requirements of this specification."

PAGE 19

* 4.7.2a, delete and substitute:

"a. Measuring apparatus: Different types of measuring test equipment (multimeter, bridges, or equivalent) are permitted to be used on the initial and final readings of this test, provided the equipment is the same style, model, or if it can be shown that the performance of the equipment is equivalent. The supplier shall establish and maintain a calibration system in accordance with ANSI/NCSL Z540-1, ISO 10012-1, or equivalent system as approved by the qualifying activity."

PAGE 28

* 4.7.15f, delete and substitute:

"f. Measurement during test: Measurement shall be made as near as possible to the specified time but may be adjusted so that measurements need not be made during other than normal weekdays.

1. Qualification inspection table VI:

(a) Group VI (100 percent rated wattage): DC resistance shall be measured at the end of the 0.5 hour "off" periods after 250 + 72, -24; 500 +72, -24; and 1,000 +72, -24 hours have elapsed.

(b) Group VIII (50 percent rated wattage): DC resistance shall be measured at the end of the 0.5 hour "off" periods after 250 +72, -24; 500 +72, -24; 1,000 +72, -24; and 2,000 +96, -24 hours have elapsed. Every 2,000 +96, -24, hours thereafter for the continuation phase until 10,000 +120, -0 hours have elapsed.

2. Quality conformance inspection, group B, table XI:

(a) Monthly subgroup 1 (50 percent rated wattage): DC resistance shall be measured at the end of the 0.5 hour period "off" periods 250 +72, -2; 500 +72, -24; 1,000 +72, -24; 2,000 +96, -24; and every 2,000 +96, -24 hours thereafter until 10,000 +120, -0 hours have elapsed.

(b) Semiannually subgroup 4 (100 percent rated wattage): DC resistance shall be measured after 250 +72, -24; 500 +72, -24; and 1,00 +72, -24 hours have elapsed.

3. Examination after test: Resistors shall be examined for evidence of mechanical damage."

*5, delete and substitute:

"5. PACKAGING

"5.1 Packaging. For acquisition purposes, the packaging requirements shall be as specified in the contract or order (see 6.2). When actual packaging of material is to be performed by DoD personnel these personnel need to contact the responsible packaging activity to ascertain requisite packaging requirements. Packaging requirements are maintained by the Inventory Control Point's packaging activity within the Military Department or Defense Agency, or within the Military Department's System Command. Packaging data retrieval is available from the managing Military Department's or Defense Agency's automated packaging files, CD-ROM products, or by contacting the responsible packaging activity."

PAGE 29

Add new paragraph:

"6.6.1 Tin plated finishes. Tin plating is prohibited (see 3.5.1.4) since it may result in tin whisker growth. Tin whisker growth could adversely, affect the operation of electronic equipment systems. For additional information on this matter, refer to ASTM B545 (Standard Specification for Electrodeposited Coating of Tin)."

The margins of this amendment are marked with an asterisk to indicate where changes from the previous amendment were made. This was done as a convenience only and the Government assumes no liability whatsoever for any inaccuracies in these notations. Bidders and contractors are cautioned to evaluate the requirements of this document based on the entire content irrespective of the marginal notations and relationship to the last previous issue.

CONCLUDING MATERIAL

Custodians:
Army - ER
Navy - EC
Air Force - 85
NASA - NA

Review activities:
Army - AR, AT, AV, ME, MI
Navy - AS, MC, OS
Air Force - 19, 99

Preparing activity:
Army - ER

Agent:
DLA -ES

(Project 5905-1424)

[INCH-POUND]

MIL-R-39008C
10 August 1990
SUPERSEDING
MIL-R-39008B
14 June 1973

MILITARY SPECIFICATION

RESISTORS, FIXED, COMPOSITION (INSULATED), ESTABLISHED RELIABILITY GENERAL SPECIFICATION FOR

This specification is approved for use by all Departments and Agencies of the Department of Defense.

1. SCOPE

1.1 Scope. This specification covers the general requirements for established reliability, insulated, fixed resistors having a composition resistance element consisting of a mixture of carbon, insulating material, and suitable binders, either molded together or applied as a thin layer of conducting material on an insulating form. Resistors covered by this specification have failure rates ranging from 1.0 to 0.001 percent per 1,000 hours (see 1.2.1.5) at 50 percent full-load operation at an ambient temperature of 70°C (see table I). These failure rates are established at a 60 percent confidence level on the basis of life tests. The failure rate, identified by the appropriate symbol, is referred to operation at rated temperature and at a voltage equivalent to 50 percent of rated wattage (with a permissible resistance change of ±15 percent). A part per million (PPM) quality system is used for documenting and reporting the average outgoing quality of resistors supplied to this specification. Statistical process control (SPC) techniques are required in the manufacturing process to minimize variation in production of resistors supplied to this specification.

1.2 Classification.

1.2.1 Part or Identifying Number (PIN). The Part or Identifying Number is in the following form, and as specified (see 3.1, 6.1, and 6.12):

RCR07	G	153	J	M
Style (see 1.2.1.1)	Characteristic (see 1.2.1.2)	Resistance (see 1.2.1.3)	Resistance tolerance (see 1.2.1.4)	Failure rate (see 1.2.1.5)

Beneficial comments (recommendations, additions, deletions) and any pertinent data which may be of use in improving this document should be addressed to: US Army Laboratory Command ATTN: SLCET-R-S, Fort Monmouth, NJ 07703-5000 by using the self-addressed Standardization Document Improvement (DD Form 1426) appearing at the end of this document or by letter.

AMSC N/A FSC 5905

DISTRIBUTION STATEMENT A. Approved for public release; distribution is unlimited.

TABLE I. Characteristic.

Symbol	Maximum ambient operating temperature (100 percent rated wattage and 50 percent rated wattage for failure rate determination.)	Resistance temperature characteristic		
		Nominal resistance	Maximum allowable change in resistance from resistance at ambient temperature of 25°C	
			At -55°C	At +105°C
	°C	Ohms	Percent (+)	Percent (+)
		1,000 and under	6.5	5
		1,100 to 10,000 incl.	10.0	6
		11,000 to 0.1 megohm incl	13.0	7.5
G	70	Megohms		
		0.11 to 1.0 incl	15.0	10.0
		1.1 to 10 incl	20.0	15.0
		11.0 and over	25.0	15.0

1.2.1.1 Style. The style is identified by the three-letter symbol "RCR" followed by a two-digit number; the letters identify established reliability, insulated, composition, fixed resistors, and the number identifies the size and power rating of the resistors.

1.2.1.2 Characteristic. The characteristic is identified by a single letter in accordance with table I.

1.2.1.3 Resistance. The nominal resistance value expressed in ohms is identified by three-digit number; the first two digits represent significant figures and the last digit specifies the number of zeros to follow. When resistance values less than 10 ohms are required, the letter "R" is substituted for one of the significant digits to represent the decimal point. When the letter "R" is used, succeeding digits of the group represent figures as shown in the following example:

2R7 = 2.7 ohms

Minimum and maximum resistance values shall be as specified (see 3.1). The standard values for every decade shall follow the sequence demonstrated for the "10 to 100" decade in accordance with MS90178.

1.2.1.4 Resistance tolerance. The resistance tolerance is identified by a single letter in accordance with table II.

TABLE II. Resistance tolerance.

Symbol	Resistance tolerance
	Percent (±)
J	5
K	10

1.2.1.5 Failure rate designation. The failure rate designation as shown in table III is signified by a single letter (M, P, R, S), which identifies the failure rate level for which the resistor is qualified (see 4.4).

TABLE III. Failure rate level (at 50 percent rated wattage).

Failure-rate level designation	Failure rate percent/1,000 hours
M.....	1.0
P.....	0.1
R.....	0.01
S.....	0.001

2. APPLICABLE DOCUMENTS

2.1 Government documents.

2.1.1 Specifications, standards, and handbooks. The following specifications, standards, and handbooks form a part of this document to the extent specified herein. Unless otherwise specified, the issues of these documents are those listed in the issue of the Department of Defense Index of Specifications and Standards (DODISS) and supplement thereto, cited in the solicitation (see 6.1).

SPECIFICATION

MILITARY

MIL-R-39008/1 - Resistors, Fixed, Composition (Insulated), Established Reliability, Style RCR07.
MIL-R-39008/2 - Resistors, Fixed, Composition (Insulated), Established Reliability, Style RCR20.
MIL-R-39008/3 - Resistors, Fixed, Composition (Insulated), Established Reliability, Style RCR32.
MIL-R-39008/4 - Resistors, Fixed Composition (Insulated), Established Reliability, Style RCR05.
MIL-R-39008/5 - Resistors, Fixed, Composition (Insulated), Established Reliability, Style RCR42.
MIL-R-39032 - Resistors, Packaging of.

STANDARDS

MILITARY

MIL-STD-202 - Test Methods for Electronic and Electrical Component Parts.
MIL-STD-690 - Failure rate Sampling Plans and Procedures.
MIL-STD-790 - Reliability Assurance Program for Electronic Parts Specifications.
MIL-STD-810 - Environmental Test Methods and Engineering Guidelines.
MIL-STD-1276 - Leads for Electronic Component Parts.
MIL-STD-1285 - Marking of Electrical and Electronic Parts.
MS90178 - Standard 24 Value Series Decade for Electronic Components of 5-, 10-, and 20-Percent Tolerances.

(Unless otherwise indicated, copies of federal and military specifications, standards, and handbooks are available from the Standardization Documents Order Desk, Building 4D, 700 Robbins Avenue, Philadelphia, PA 19111-5094).

2.2 Non-Government publications. The following documents form a part of this document to the extent specified herein. Unless otherwise specified, the issues of the documents which are DOD adopted are those listed in the issue of the DODISS cited in the solicitation. Unless otherwise specified, the issues of documents not listed in the DODISS are the issues of the documents cited in the solicitation (see 6.1).

ELECTRONIC INDUSTRIES ASSOCIATION (EIA)

EIA-554	-	Assessment of Outgoing Nonconforming Levels in Part Per Million (PPM) (DOD Adopted).
EIA-557	-	Statistical Process Control Systems (DOD Adopted).

(Application for copies should be addressed to the Electronic Industries Association, 2001 Eye Street, Washington DC 20006.)

(Non-Government standards and other publications are normally available from organizations that prepare or distribute the documents. These documents also may be available in or through libraries or other informational services.

2.3 Order of precedence. In the event of a conflict between the text of this document and the references cited herein (except for related associated detail specifications, specification sheets, or MS standards), the text of this document takes precedence. Nothing in this document, however, supersedes applicable laws and regulations unless a specific exemption has been obtained.

3. REQUIREMENTS

3.1 Associated detail specifications. The individual item requirements shall be as specified herein and in accordance with the applicable associated detail specification. In the event of any conflict between the requirements of this specification and the associated detail specification, the latter shall govern.

3.2 Qualification. Resistors furnished under this specification shall be products which are authorized by the qualifying activity for listing on the applicable qualified products list at the time of award of contract (see 4.4 and 6.2). In addition, the manufacturer shall obtain certification from the qualifying activity that the reliability assurance requirements of 4.1.2 have been met and are being maintained. Authorized distributors that are approved to MIL-STD-790 distributor requirements by the qualified products list (QPL) manufacturer are listed in the QPL.

3.3 Reliability and quality.

3.3.1 Reliability. The reliability of resistors furnished under this specification shall be established and maintained in accordance with the requirements and procedures specified in MIL-STD-690 and MIL-STD-790 with details and exceptions specified in 4.1.2, 4.4.4, 4.6.2.1.

3.3.2 Quality.

3.3.2.1 Statistical process control. The contractor shall implement and use statistical process control techniques in the manufacturing process for parts covered by this specification. The SPC program shall be developed and maintained in accordance with all the requirements of EIA-557. The SPC program shall be documented and maintained as part of the overall reliability assurance program as specified in MIL-STD-790. The implementation of statistical process control shall be 12 months from the date of this specification. Processes for application of SPC techniques should include but are not limited to molding operation and marking.

3.3.2.2 Quality levels. The quality of lots that have been subjected to and passed the subgroup 1, 100 percent screening inspection of the group A inspection shall be established and maintained in accordance with 4.6.1.2.2 and EIA-554. Individual PPM defect level (i.e., PPM-2 and PPM-3) and an overall PPM defect level (i.e., PPM-5) shall be established based on the tests prescribed in the subgroup 2 tests of the group A inspections. The defect level for PPM-2 shall be less than 100 PPM. The implementation of part per million verification shall be 12 months from the date of this specification.

3.3.2.2.1 Noncompliance. The contractor shall notify the qualifying activity when the 100 PPM level is reached or exceeded for PPM-2. The contractor shall provide sufficient information to the qualifying activity documenting the causes of the problem and what corrective action is being taken. Failure to correct this problem shall be the basis for removal of the affected product from the QPL.

3.4 Material. The material shall be as specified herein. However, when a definite material is not specified, a material shall be used which will enable the resistors to meet the performance requirements of this specification. Acceptance or approval of any constituent material shall not be construed as a guarantee of the acceptance of the finished product.

3.5 Design and construction. The resistors shall be of the design, construction, and physical dimensions specified (see 3.1). Each resistor shall consist of a composition resistance element protected against exposure to humidity and temperature conditions by an enclosure or a coating of moisture-resistant, insulating material.

3.5.1 Terminals. All terminals shall be suitably treated to faciliate soldering.

3.5.1.1 Solder dip (retinning) leads. The manufacturer (or his authorized category C distributor) may solder dip (retin) the leads of product supplied to this specification provided the solder dip process has been approved by the qualifying activity.

3.5.1.2 Qualifying activity approval. Approval of the solder dip process will be based on one of the following options:

a. When the original lead finish qualified was hot solder dip lead finish 52 of MIL-STD-1276. (NOTE: The 200 microinch maximum thickness is not applicable.) The manufacturer shall use the same solder dip process for retinning as is used in the original manufacture of the product.

b. When the lead originally qualified was not hot solder dip lead finish 52 of MIL-STD-1276 as prescribed in item a, approval for the process to be used for solder dip shall be based on the following test procedure:

(1) Thirty samples of any resistance value for each style and lead finish shall be subjected to the manufacturing's solder dip process. Following the solder dip process, the resistors are subjected to the dc resistance test and other group A electricals). No defects are allowed.

(2) Ten of the 30 samples are then subjected to the solderability test. No defects are allowed.

(3) The remaining 20 samples are subjected to the resistance to solder heat test followed by the moisture resistance test (NOTE: Solder dip of gold plated leads is not allowed.)

3.5.1.3 Solder dip (retinning) options. The manufacturer (or authorized category C distributor) may solder dip (retin) as follows:

a. After the 100 percent group A screening tests. Following the solder dip (retinning process), the electrical measurements required in group A, subgroup 1, 100 percent screening tests shall be repeated on 100 percent of the lot. (NOTE: The manufacturer may solder dip (retin) prior to the 100 percent electrical measurements of the group A, subgroup 1 tests.) The percentage defective allowable (PDA) for the electrical measurements shall be the same as for the subgroup 1 tests.

b. As a corrective action, if the lot fails the group A solderability test.

c. After the group A inspection has been completed. Following the solder dip (retinning) process, the electrical measurements required in group A, subgroup 1, 100 percent screening test shall be repeated on 100 percent of the lot. The percent defective allowable (PDA) for the electrical measurements shall be the same as for the subgroup 1 tests. Following these tests, the manufacturer shall submit the lot to the group A solderability test as specified in 4.6.1.2.

3.6 Power rating. Resistors shall have a power rating as specified (see 3.1), based on continuous full-load operation (100-percent rated wattage) at an ambient temperature of 70°C. This power rating is dependent on the ability of the resistors to meet the applicable life requirements specified in 4.7.15. For resistors operated at an ambient temperature in excess of 70°C, the load shall be derated in accordance with the specified curve (see 3.1).

3.7 Voltage rating. Resistors shall have a rated direct current (dc) continuous working voltage or an approximately sine-wave root-mean-square (rms) continuous working voltage at commerical-line frequency and waveform corresponding to the power rating, as determined from the following formula:

$$E = \sqrt{PR}$$

Where: E = Rated dc or rms ac continuous working voltage at commerical-line frequency and waveform.

P = Power rating (see 3.1)
R = Nominal resistance (see 3.1)

In no case shall the rated dc or rms continuous working voltage be greater than the applicable maximum value (see 3.1 and table IV).

TABLE IV. Maximum continuous working voltage.

Power rating	Maximum continuous working voltage (dc or rms)
Watts	Volts
0.1250	150
0.2500	250
0.5000	350
1.0000	500
2.0000	500

3.8 DC resistance. When resistors are tested as specified in 4.7.2, the dc resistance shall be within the specified tolerance of the nominal resistance (see 1.2.1.3). The nominal resistance shall be in accordance with MS90178.

3.9 Resistance-temperature characteristic. When resistors are tested as specified in 4.7.3, the change in resistance at any temperature, referred to an ambient temperature of 25°C, shall not exceed the limits specified for the applicable temperature and resistance values specified in table I. The change in resistance at the intermediate temperatures shall not exceed a value proportional to the maximum values specified in table I.

3.10 Voltage coefficient (applicable only to resistors of 1,000 ohms and above). When resistors are tested as specified in 4.7.4, voltage coefficient measurements which will result in a total resistance change of 2 percent or less shall be considered acceptable. However, if the change is greater than 2 percent, the voltage coefficient shall not exceed 0.05 percent per volt for resistors rated at 0.125 watt, 0.035 percent per volt for resistors rated at .250 and .500 watt, and 0.02 percent per volt for resistors rated above .500 watt.

3.11 Dielectric withstanding voltage. When resistors are tested as specified in 4.7.5, there shall be no evidence of mechanical damage, arcing, or breakdown.

3.12 Insulation resistance. When resistors are tested as specified in 4.7.6, the insulation resistance shall be not less than 10,000 megohms.

3.13 Low temperature operation. When resistors are tested as specified in 4.7.7, there shall be no evidence of mechanical damage and the change in resistance between the initial and final measurements at 25°C ±5°C shall not exceed ±(3 percent +0.05 ohm).

3.14 Thermal shock. When resistors are tested a specified in 4.7.8, there shall be no evidence of mechanical damage and the change in resistance shall not exceed ±(4 percent +0.05 ohm).

3.15 Moisture resistance. When resistors are tested as specified in 4.7.9, there shall be no evidence of mechanical damage or products of corrosion except for normal discoloration, and the change in resistance shall not exceed an average of 10 percent for each group of 10 resistors tested, nor a maximum of 15 percent for any individual resistor (plus or minus), unless otherwise specified see 3.1. When computing the average change in resistance, the sign (plus or minus) of the individual change shall be disregarded. The insulation resistance shall be 100 megohms, minimum.

3.16 Short-time overload. When resistors are tested as specified in 4.7.10, there shall be no evidence of arcing, burning, or charring, and the change in resistance shall not exceed ±(2.5 percent +0.05 ohm).

3.17 Terminal strength.

3.17.1 Direct load. When resistors are tested as specified in 4.7.11, resistors shall withstand the specified load without mechanical damage.

3.17.2 Twist. When resistors are tested as specified in 4.7.11.1, there shall be no evidence of breakage or other mechanical damage and the change in resistance from the initial measurement of 3.17.1 shall not exceed ±(1.0 percent +0.05 ohm).

3.18 Resistance to soldering heat. When resistors are tested as specified in 4.7.12, there shall be no evidence of mechanical damage and the change in resistance shall not exceed ±(3 percent +0.05 ohm).

3.19 Shock, (specified pulse). When resistors are tested as specified in 4.7.13, there shall be no evidence of mechanical damage. There shall be no electrical discontinuity during the test.

3.20 Vibration, high frequency. When resistors are tested as specified in 4.7.14, there shall be no evidence of mechanical damage and the change in resistance from the initial measurement of 3.19 shall not exceed ±(2 percent +0.05 ohm). There shall be no electrical discontinuity during the test.

3.21 Life.

3.21.1 Qualification.

3.21.1.1 One hundred percent rated wattage. When resistors are tested as specified in 4.7.15, there shall be no evidence of mechanical damage; the change in resistance between the initial measurements and each of the succeeding measurements shall not exceed an average of 6 percent for each group of 10 resistors tested, nor a maximum value of 10 percent for any individual resistor. When computing the average change in resistance, the sign (plus or minus)of the individual changes shall be disregarded.

3.21.1.2 Fifty percent rated wattage (qualification only). When resistors are tested as specified in 4.7.15, there shall be no evidence of mechanical damage. The change in resistance between the initial measurement and any succeeding measurement shall not exceed ±8 percent.

3.21.2 Failure-rate level determination. When resistors are tested as specified in 4.7.15, there shall be no evidence of mechanical damage. The change in resistance between the initial measurement and any of the succeeding measurements up to and including 2,000 hours shall not exceed ±15 percent. This single failure criteria shall be applicable to all measurements during the life test for purposes of determining failure-rate qualification, and is applicable as a parallel requirement with 3.21.1 to the measurements made during the life test specified for qualification inspection.

3.22 Solderability. When resistors are tested as specified in 4.7.16, the dipped surface of the leads shall be at least 95-percent covered with a new solder coating. The remaining 5-percent of the lead surface may show only small pinholes or voids and shall not be concentrated in one area. Bare base metal and areas where the solder dip failed to cover the original coating are indications of poor solderability, and shall be cause for failure.

3.23 Low temperature storage. When resistors are tested as specified in 4.7.17, there shall be no evidence of mechanical damage. The change in resistance shall not exceed ±(3 percent +0.05 ohm).

3.24 Marking. Resistors shall be free of missing, illegible, incorrect, mixed or smeared color markings, and shall be permanently colored coded in accordance with MIL-STD-1285. A fifth band shall denote the failure-rate designation (see 1.2.1.5), as follows:

Failure designation	Band color
M	Brown
P	Red
R	Orange
S	Yellow

3.24.1 Unit package. The unit package shall be marked with the PIN, "JAN" marking, date code, and the manufacturer's name, trademark or code symbol. Date and source code shall be in accordance with MIL-STD-1285. Marking shall remain legible at the end of all tests.

3.24.2 JAN and "J" marking. The United States Government has adopted, and is exercising legitimate control over the certification marks "JAN" and J, respectively, to indicate that items so marked or identified are manufactured to, and meet all the requirements of military specifications. Accordingly, items acquired to, and meeting all of the criteria specified herein and in applicable specifications shall bear the certification mark "JAN" except that items too small to bear the certification mark "JAN" shall bear the letter "J". The "JAN" or "J" shall be placed immediately before the PIN except that if such a location would place a hardship on the manufacturer in connection with such marking, the "JAN" or "J" may be located on the first line above or below the PIN. Items furnished under contracts or orders which either permit or require deviation from the conditions or requirements specified herein and in applicable specifications shall not bear "JAN" or "J". In the event an item fails to meet the requirements of this specification and the applicable specifications sheets or associated detail specifications, the manufacturer shall remove the "JAN" or the "J" from the sample tested and also from all items represented by the sample. The "JAN" or "J" certification mark shall not be used on products acquired to contractor drawings or specifications. The United States Government has obtained Certification of Registration No. 504,860 for the certification mark "JAN".

3.25 Failure rate substitution. A manufacturer may supply to all higher failure rate levels than that to which he is qualified. Parts qualified and marked to lower failure rate levels are substitutable, with procuring agency approval, for higher failure rate level parts, and shall not be remarked unless specified in the contract or purchase order.

TABLE V. Failure rate substitute.

Failure rate	Substitute
S (0.001)	- - -
R (0.01)	S
P (0.1)	S,R
M (1.0)	S,R,P

3.26 Fungus. All external materials including the color coding material, shall be nonnutrient to fungus growth, or shall be suitably treated to retard fungus growth. The manufacturer shall verify by certification that all external materials, including the color coding material, are fungus resistant or shall test the resistors as specified in 4.7.18. If tested in accordance with 4.7.18, there shall be no evidence of fungus growth on external surfaces.

3.27 Soldering. When soldering is employed, only noncorrosive flux shall be used, unless it can be shown that corrosive elements have been satisfactorily removed after soldering. Electrical connections shall be electrically continuous after soldering. In no case shall the solder used, start to flow at a temperature less than 200°C.

3.28 Workmanship. Resistors shall be processed in such a manner as to be uniform in quality, shall meet the requirements of 3.1, 3.4, 3.5.1 to 3.5.1.3 inclusive, 3.24, 3.25 to 3.28 inclusive, as applicable, and shall be free from cracks, holes, chips, malformation, and other defects that will affect life or serviceability. The wire leads shall be unbroken, and not crushed or nicked. Nicks or scratches resulting from handling during final processing or testing shall not be considered as defects, provided they are located at least 0.5 inch (1.27 mm) away from the end of the resistor.

4. QUALITY ASSURANCE PROVISIONS

4.1 Responsibility for inspection. Unless otherwise specified in the contract or purchase order, the contractor is responsible for the performance of all inspection requirements (examinations and tests) as specified herein. Except as otherwise specified in the contract or purchase order, the contractor may use his own or any other facilities suitable for the performance of the inspection requirements specified herein, unless disapproved by the Government. The Government reserves the right to perform any of the inspections set forth in the specification where such inspections are deemed necessary to assure supplies and services conform to prescribed requirements.

4.1.1 Responsibility for compliance. All items shall meet all requirements of sections 3 and 5. The inspection set forth in this specification shall become a part of the contractor's overall inspection system or quality program. The absence of any inspection requirements in the specification shall not relieve the contractor of the responsibility of assuring that all products or supplies submitted to the Government for acceptance comply with all requirements of the contract. Sampling inspection, as part of manufacturing operations, is an acceptable practice to ascertain conformance to requirements, however, this does not authorize submission of known defective material, either indicated or actual, nor does it commit the Government to accept defective material.

4.1.2 Reliability assurance program. A reliability assurance program shall be established and maintained in accordance with MIL-STD-790. Evidence of such compliance shall be verified by the qualifying activity of this specification as a prerequisite for qualification and continued qualification.

4.1.3 Statistical process control. A SPC program shall be established and maintained in accordance with EIA-557. Evidence of such compliance shall be verified by the qualifying activity as a prerequisite for qualification and retention of qualification.

4.2 Classification of inspection. The inspection requirements specified herein are classified as follows:

a. Qualification inspection (see 4.4).

b. Verification of qualification (see 4.5).

c. Quality conformance inspection (see 4.6).

4.3 Inspections conditions and precautions.

4.3.1 Inspection conditions. Unless otherwise specified herein, all inspections shall be performed in accordance with the test conditions specified in the "GENERAL REQUIREMENTS" OF MIL-STD-202.

4.3.2 Precautions. Adequate precautions shall be taken during inspection to prevent condensation of moisture on resistors. Precautions shall also be taken to prevent damage by heat when soldering resistor leads to terminals.

4.3.3 Mounting of resistors. Unless otherwise specified herein, suitable clips shall be used wherever resistors are mounted for test purposes.

4.4 Qualification inspection. Qualification inspection shall be performed at a laboratory acceptable to the Government.

4.4.1 Sample. The number of sample units comprising a sample of resistors to be submitted for qualification inspection shall be as specified in the appendix to this specification. The sample shall be taken from a production run and shall be produced with equipment and procedures normally used in production.

4.4.2 Test routine. All sample units shall be conditioned for 96 ±4 hours in a dry oven at a temperature of 100°C ±5°C. For style RCR05, the duration for conditioning shall be 25 ±4 hours, and for RCR42, the duration shall be 130 ±4 hours. After conditioning, sample units shall be subjected to the inspection for their particular group. Sample units shall be stored in desiccators using a suitable desiccant, such as activated alumina or silica gel, from time of removal from the oven until the beginning tests. Sample units, with the exception of those for group VII, shall be subjected to the dc resistance test of group I; only 20 sample units, with the exception of those for group VII, shall be subjected to the visual and mechanical examination of group I. The 84 sample units shall then be divided 10 each for groups II to VI, inclusive, and 34 for group VIII. Ten or 20 sample units, at the option of the manufacturer, shall be subjected to the inspection of group VII.

4.4.3 Failures. Failure in excess of those allowed in table VI shall be cause for refusal to grant qualification.

4.4.4 FR qualification. FR qualification shall be in accordance with the general and detail requirements of MIL-STD-690 and the following details:

a. Procedure I - Qualification at the initial FR level. Level M (1.0 percent) of FRSP-60 shall apply. Sample units shall be subjected to the qualification inspection specified in group VIII, table VI (see 4.4.2). Entire life test sample shall continue on test to 10,000 hours as specified in 4.7.15, upon completion of the 2,000 hour qualification.

b. Procedure II - Extension of qualification to lower FR levels. To extend qualification to the R level (0.01 percent) and S (0.001 percent) FR levels, data from two or more styles of similar construction may be combined.

c. Procedure III - Maintenance of FR level qualification. Maintenance period of table VII shall apply. Regardless of the number of production lots produced during this period, the specified number of unit hours shall be accumulated to maintain qualification (see 4.6.2).

4.4.5 Quality level verification. The contractor is responsible for establishing a quality system to verify the PPM level of lots that are subjected to subgroup 2 tests of group A inspections. The PPM defect level shall be based on a 6 month moving average. The contractor shall verify and report monthly on individual PPM categories (i.e., PPM-2 and PPM-3) and an overall PPM defect level (i.e., PPM-5).

TABLE VI. Qualification inspection.

Inspection	Requirement paragraph	Test method paragraph	Number of sample failures allowed 1/
Group I			
Visual and mechanical inspection 2/ 3/	3.1, 3.4, 3.5.1 to 3.5.1.3 incl, 3.24. 3.27 to 3.28 incl.	4.7.1	1
DC resistance 3/	3.8	4.7.2	
Group II			
Resistance-temperature characteristic 3/	3.9	4.7.3	1
Voltage coefficient (applicable to resistors of 1,000 ohms and above)	3.10	4.7.4	
Dielectric withstanding voltage 3/	3.11	4.7.5	
Insulation resistance 3/	3.12	4.7.6	2
Group III			
Low temperature operation	3.13	4.7.7.	1
Thermal shock	3.14	4.7.8	
Low temperature storage	3.23	4.7.17	
Moisture resistance	3.15	4.7.9	
Short-time overload	3.16	4.7.10	
Group IV			
Terminal strength	3.17	4.7.11	1
Resistance to soldering heat	3.18	4.7.12	
Group V			
Shock (specified pulse)	3.19	4.7.13	1
Vibration, high frequency	3.20	4.7.14	
Group VI			
Life (100 percent rated wattage) 4/	3.21	4.7.15	1
Group VII			
Solderability 5/	3.22	4.7.16	1
Group VIII			
Life (50 percent rated wattage)	3.21, and 3.21.1.2	4.7.15	1
Group IX			
Fungus	3.26	4.7.18	0

See footnotes on next page.

1/ Failure of an individual resistor in one or more tests in groups I to VI inclusive, shall be charged as a single failure. Failures for each resistance value shall be permitted as specified in each group, but not more than two failures shall be permitted in groups I through VI combined.
2/ Marking shall be considered defective only if the marking is illegible.
3/ Nondestuctive examinations and tests.
4/ When a group of resistors fails to meet the specified average percent change in resistance requirement, three failures shall be charged; however, a failure shall be charged for each resistor of the group which exceeds the specified maximum percent change in resistance requirement, and these resistors shall not be considered in computing the average.
5/ Ten or 20 sample units, at the option of the supplier, shall be submitted to this test; if 10 sample units are submitted, both terminals leads of each resistor shall be subjected to the test; if 20 sample units are submitted, only one terminal of each resistor shall be subjected to the test. Failure of two terminal leads on the same resistor subjected to the solderability test shall be considered as two separate failures.

4.5 Verification of qualification. Every six months the manufacturer shall compile a summary of the results of quality conformance inspections and extended failure rate (FR) data, in the form of a verification of qualification report, and forward it to the qualifying activity within 30 days after the end of the reporting period as the basis of continued qualification approval. In addition, the manufacturer shall immediately notify the qualifying activity whenever the FR data indicates that the manufacturer has failed to maintain the qualified FR level, or the group B inspection data indicates failure of the qualified product to meet the requirements of this specification. Continuation shall be based on evidence that over the 6-month period the following has been met:

a. Verification by the qualifying activity that the manufacturer meets the requirements of MIL-STD-790.
b. The manufacturer has not modified the design of the item.
c. The specification requirements for the item have not been amended so far as to affect the character of the item.
d. Lot rejection for group A inspection does not exceed 15 percent or one lot, whichever is greater.
e. The requirements for group B inspection are met.
f. The records of FR tests combined substantiate that the "M" (1.0 percent), or "P" (0.1 percent) FR level has been maintained, or that the manufacturer continues to meet the "R" (0.01 percent), and "S" (0.001 percent) FR level for which qualified, although the total component hours of testing does not, as yet meet the requirements of 4.4.4c.
g. The contractor shall provide documentation to the qualifying activity pertaining to PPM calculations including number of part types tested, individual PPM defect categories (i.e., PPM-2, PPM-3) and overall PPM defect rate (PPM-5). This information shall be submitted on a detail specification basis and based on a 6-month moving average.

When group B requirements were not met and the manufacturer has taken corrective action satisfactory to the Government, group B testing shall be instituted. A summary of the retesting shall be fowarded to the qualifying activity within 30 days after completion of the retest. All reports shall be certified by a responsible company official and the Government inspector.

4.6 Quality conformance inspection.

4.6.1 Inspection of product for delivery. Inspection of product for delivery shall consist of group A inspection. Delivery of shipment shall not be delayed pending completion of group B inspection.

4.6.1.1 Inspection lot. An inspection lot shall consist of all the resistors of the same style, characteristic, and protective enclosure or coating manufactured under essentially the same process and conditions during a manufacturing period of one month, maximum.

TABLE VII. Sampling plan for maintenance of FR level qualification.

FR level symbol	Qualified FR level	Maximum qualification maintenance period	Cumulative units hours in millions (c= number of failures permitted)					
			c = 0 1/	c = 1	c = 2	c = 3	c = 4	c = 5
	% 1,000 HR							
M	1.0	3 months		.0532	.110	.175	.243	.315
P	0.1	6 months		.532	1.10	1.75	2.43	3.15
R	0.01	9 months		5.32	11.0	17.5	24.3	31.5
S	0.001	12 months	10.5	53.2	110	175	243	315

1/ Applicable to FR level "S" only.

4.6.1.2 Group A inspection. Group A inspection shall consist of the examinations and tests specified in table VIII, and shall be made set of sample units in the order shown.

TABLE VIII. Group A inspection.

Inspection	Requirement paragraph	Test method paragraph	Number of samples
Subgroup 1			See table IX.
DC resistance PPM-2	3.8	4.7.2	
Mechanical PPM-3	3.5	4.7.1	
Subgroup 2			
Visual examination			
Material	3.4		see 4.6.1.2.3
Design and construction	3.5		
Terminals	3.5.1		
Soldering	3.27		
Workmanship	3.28		
Marking	3.24	4.7.1	
Subgroup 3			see 4.6.1.2.4
Solderability	3.22	4.7.16	

TABLE IX. Sampling plan for PPM categories.

Lot size	Sample size
1 - 125	100 percent
126 - 3,200	125
3,201 - 10,000	200
10,001 - 35,000	315
35,001 - 150,000	500
150,001 - 500,000	800
500,001 - up	1250

4.6.1.2.2 Subgroup 1 (PPM categories). Subgroup 1 tests shall be performed on an inspection lot basis. Samples subjected to subgroup 1 shall be selected in accordance with table VIII based on the size of the inspection lot. (NOTE: Larger samples may be inspected by the contractor in order to calculate PPM, however rejection of the lot shall be based on one or more defects.) In the event of one or more failures, the lot shall be rejected. Major and minor defects shall be as defined in table X.

TABLE X. Classification of defects.

Requirement	Defect classification
Construction:	
Resistor body - cracks, holes, or chips	Major
Malformation of body due to improper molding	Major
End chipping:	
Less than .333 distance to wire lead	Minor
Greater than .333 distance to wire lead and same distance in longitudinal direction	Major
Leads:	
Broken, crushed, or nicked (within 0.5 inch from body)	Major
Marking:	
Wrong, or missing marking	Major
Illegible or smeared marking	Minor
Resistance:	
Greater than 100 percent but not exceeding 125 percent of tolerance	Minor
Greater than 125 percent of tolerance	Major

4.6.1.2.2.1 Rejected lots. The rejected lot shall be segregated from new lots and those lots that have passed inspection. The rejected lot shall be 100 percent inspected for those quality characteristics found defective in the sample and any defects found removed from the lot. A new sample of parts shall then be randomly selected in accordance with table VIII. If one or more defects are found in this second sample, the lot shall be rejected and shall not be supplied to this specification.

4.6.1.2.2.2 PPM calculations. PPM calculations shall be based on the results of the first sample check as prescribed in 4.6.1.2.2. Calculations and data exclusion shall be in accordance with EIA-554, method B. (NOTE: PPM calculations shall not use data on the second sample submission).

4.6.1.2.3 Subgroup 2. Subgroup 2 shall be performed on an inspection lot basis. A sample of 50 parts shall then be randomly selected, if one or more defects are found, the lot shall be rescreened and defects removed. A new sample of 50 parts shall then randomly be selected. If one or more defects are found in this second sample, the lot shall be rejected and shall not be supplied to this specification.

4.6.1.2.4 Subgroup 3 (solderability).

4.6.1.2.4.1 Sampling plan. Thirteen samples shall be selected randomly from each inspection lot and subjected to the subgroup 3 solderability test. The manufacturer may use electrical rejects from the subgroup 1 screening tests for all or part of the samples to be used for solderability testing. If there are one or more defects, the lot shall be considered to have failed.

4.6.1.2.4.2 Rejected lots. In the event of one or more defects, the inspection lot is rejected. The manufacturer may use one of the following options to rework the lot:

a. Each production lot that was used to form the failed inspection lot shall be individually submitted to the solderability test as required in 4.7.16. Production lots that pass the solderability test are available for shipment. Production lots failing the solderability test can be reworked only if submitted to the solder dip procedure in b.

b. The manufacturer submits the failed lot to a 100 percent solder dip using an approved solder dip process per 3.5.1.1. Following the solder dip, the electrical measurements required in group A, subgroup 1 tests shall be repeated on 100 percent of the lot. The percent defective allowable (PDA) for the electrical measurements shall be as for the subgroup 1 tests. Thirteen additional samples shall be then selected and subjected to the solderability test with zero defects allowed. If the lot fails this solderability test, the lot shall be considered rejected and shall not be furnished against the requirements of this specification.

4.6.1.2.4.3 Disposition of samples. The solderability test is considered a destructive test and samples submitted to the solderability test shall not be supplied on the contract.

4.6.2 Periodic inspection. Periodic inspection shall consist of group B. Except where the results of these inspections show noncompliance with the applicable requirements (see 4.6.2.1.4), delivery of products which have passed group A inspection shall not be delayed pending the results of these periodic inspections.

4.6.2.1 Group B inspection. Group B inspection shall consist of the tests specified in table XI, in the order shown. The tests shall be performed on sample units of each style selected from lots that have been subjected to and passed group A inspection. Before being subjected to any of the tests listed, all sample units shall be conditioned as specified in 4.4.2.

4.6.2.1.1 Sampling plan.

4.6.2.1.1.1 Monthly (subgroup 1). Test samples shall be selected for each inspection lot produced during a one month period. These samples shall be accumulated and placed on the life test as specified in 4.7.15, once a month, for the full 10,000-hour life test period. The test sample size shall be determined by the manufacturer so that the unit hours generated meet the maintenance of qualification requirements specified for the qualified failure level (see 4.4.4). In any event, a minimum of 5 samples shall be selected from each lot. As far as practicable, the resistance values tested during a maintenance period shall be representative of all resistance decades produced during this period. The accumulated data shall be used for maintenance and extension of failure rate qualification.

4.6.2.1.1.2 Monthly (subgroup 2). Ten sample units of each style and of any resistance value shall be inspected monthly in accordance with table XI.

4.6.2.1.1.3 Quarterly. Sample units selected for quarterly inspection shall be of the same style. Ten sample units of the lowest resistance value, 10 of the critical or the value closest to the critical value (see table XI), and 10 of the highest resistance value, which were produced during the previous 3-month period, shall be subjected to the tests, in accordance with table XI.

TABLE XI. Group B inspection.

Inspection	Requirement paragraph	Test method paragraph	Number of samples
Monthly			
Subgroup 1			
Life	3.21.2	4.7.15	see 4.6.2.1.1.1
Subgroup 2			
Voltage coefficient 1/	3.10	4.7.4	10
Dielectric withstanding voltage (atmospheric)	3.11	4.7.5.1	
Insulation resistance	3.12	4.7.6	
Quarterly			
Low temperature operation	3.13	4.7.7	30 (10 high, 10 critical, 10 low)
Thermal shock	3.14	4.7.8	
Low temperature storage	3.23	4.7.17	
Moisture resistance 1/	3.15	4.7.9	
Short-time overload	3.16	4.7.10	
Semiannually			
Subgroup 1			
Dielectric withstanding voltage (barometric)	3.11	4.7.5.2	30 (10 high, 10 critical, 10 low)
Resistance temperature characteristic	3.9	4.7.3	
Subgroup 2			
Terminal strength	3.17	4.7.11	10
Resistance to soldering heat	3.18	4.7.12	
Subgroup 3			
Shock (specified pulse)	3.19	4.7.13	10
Vibration, high frequency	3.20	4.7.14	
Subgroup 4			
Life (100 percent rated wattage) 1/	3.21.1.1	4.7.15	20 (10 critical, 10 low)

1/ Applicable only to resistors of 1,000 ohms and greater.
2/ When a group of resistors fails to meet the specified average percent change in resistance requirement, three failures shall be charged; however, a failure shall be charged in resistance requirement, and these resistors shall not be considered in computing the average.

4.6.2.1.1.4 Semiannually. Sample units selected for semiannual inspection shall be of the same style. Ten sample units of the lowest resistance value, 10 of the critical or the value closest to the critical value (see table XI), and 10 of the highest value, which were produced during the previous 6-month period, shall be subjected to the tests of subgroup 1 in accordance with table XI. Ten sample units of any resistance value shall be inspected for each of subgroups 2 and 3. Ten sample units of the lowest resistance value and 10 of the critical or nearest critical value, shall be subjected to the test of subgroup 4. A separate sample shall be selected for each subgroup listed.

4.6.2.1.2 Failures. One failure shall be allowed in any group of 10 resistors of the same resistance value within a subgroup (not applicable to monthly, subgroup 1). (In subgroup 2 of quarterly inspection, the group shall consist of 10 or 20 resistors, as applicable.) If this number is exceeded, an additional group of 10 resistors of the same resistance value may be tested and a total of three failures shall be allowed for the 20 resistors. In semiannual inspection, only one resubmission shall be allowed in any subgroups 1, 2, 3, and 4; i.e., only one resistance value shall be retested per subgroup. If more than one resistance value fails in any of these groups, it shall be considered that the resistors have failed to pass group B inspection.

4.6.2.1.3 Disposition of sample units. Sample units which have been subjected to group B inspection shall not be delivered on the contract or purchase order.

4.6.2.1.4 Noncompliance. If a sample fails to pass group B inspection, the manufacturer shall notify the qualifying activity and the cognizant inspection activity of such a failure and take corrective action on the materials or processes, or both, as warranted, and on all units of production which can be corrected and which were manufactured under essentially the same materials and processes, and which are considered subject to the same failure. Acceptance and shipment of the product shall be discontinued until corrective action has been taken. Group B inspection shall be repeated on additional sample units (all inspections, or the inspection which the original sample failed, at the option of the qualifying activity). Groups A inspection may be reinstituted; however, final acceptance and shipment shall be withheld until the group B inspection has shown that the corrective action was successful. In the event of failure after reinspection, information concerning the failure shall be furnished to the cognizant inspection activity and the qualifying activity.

4.6.3 Inspection of packaging. The sampling and inspection of the preservation, packing, and container marking shall be in accordance with the requirements of MIL-R-39032.

4.7 Methods of inspection.

4.7.1 Visual and mechanical inspection. Resistors shall be examined to verify that the materials, design, construction, physical dimensions, marking and workmanship are in accordance with the applicable requirements. General workmanship defects shall be classified in accordance with table X (see 3.1, 3.4, 3.5.1 to 3.5.1.3 inclusive, and 3.24, 3.25, 3.27 and 3.28).

4.7.2 DC resistance (see 3.8). Resistors shall be tested in accordance with method 303 of MIL-STD-202. The following details and exception shall apply:

a. Measuring apparatus: The same measuring instrument shall be used for any one test, but not necessarily for all tests.

b. Combined limit of error of measuring apparatus: Shall not exceed 0.5 percent.

c. Test voltage: Table XII gives the recommended test voltage to be impressed across the resistor in making resistance measurements. Other test voltages may be used; however, in no event shall the test voltage exceed the voltage shown in table XII. In the event of a conflict in results, attributable to the test voltage used, the nominal voltage specified in table XII shall be used to solve the conflict.

d. Temperature: The dc resistance test specified in group I of table VI shall be performed at 25°C ±2°C. For all other tests, unless otherwise specified herein, the temperature at which subsequent and final resistance measurements are made shall be within ±2°C of the temperature at which the first resistance measurement was made.

TABLE XII. DC resistance test voltages.

Nominal resistance	Test potential
Ohms	Volts
2.7 to 9.1 inclusive	0.50 ± 0.10
10 91 inclusive	0.75 ± 0.25
100 910 inclusive	2.75 ± 0.25
1,000 9,100 inclusive	9.00 ± 1.00
10,000 91,000 inclusive	27.00 ± 3.00
0.1 megohm of higher	90.0 ±10.00

4.7.3 Resistance temperature characteristic (see 3.9). The resistors shall be maintained at each of the ambient temperatures listed in table XIII. Resistance measurements shall be made at each temperature, 30 to 45 minutes after resistors have attained that temperature. The temperature adjustment shall be accurate within 1°C. The percent change in resistance, referred to a reference temperature at 25°C, shall be computed by the following formula:

$$\text{Percent change in resistance} = \frac{(R-r)\ 100}{r}$$

Where:

R = Resistance at test temperature.
r = Resistance at reference temperature.

TABLE XIII. Resistance-temperature characteristic test.

Sequence	Temperature °C
A	25
B	-15
C	-55
D	25
E	65
F	105

Resistance values at temperatures "B" and "C" of table XIII shall referred to the resistance value at temperature "A", and resistance values at temperature "E", and "F" shall be referred to the resistance value at temperature "D".

NOTE: At the option of the manufacturer the reverse sequence of table XIII may be as follows:

1. Room temperature.
2. Series of high temperatures.
3. Room temperature.
4. Series of low temperatures.

4.7.4 Voltage coefficient (applicable only to resistors of 1,000 ohms and above) (see 3.10). Resistors shall measured in accordance with method 309 of MIL-STD-202, at the rated continuous working voltage specified in 3.7 and at one-tenth the rated continuous working voltage. The voltage coefficient shall then be computed as follows:

$$\text{Voltage coefficient} = \frac{100\,(R-r)}{r} \times \frac{1}{0.9E}$$

Where:

R = Resistance at rated continuous working voltage.
r = Resistance at 0.1 rated continuous working voltage.
E = rated continuous working voltage.

4.7.5 Dielectric withstanding voltage (see 3.11).

4.7.5.1 Atmospheric pressure. Resistors shall be tested in accordance with method 301 of MIL-STD-202. The following details and exception shall apply:

a. Special preparations: Resistors shall be placed in a conductive material which will conform to the resistor surface so that between 90 and 100 percent of the outer periphery is contacted. The conductive material shall be centered on the resistor body. Care should be taken that any part of the resistor lead is as far away from the conductive material as possible.

b. Magnitude of test voltage: Twice the maximum rms continuous working voltage specified in table VI.

c. Nature of potential: An ac supply at commerical-line frequency (not more than 100 hertz) and waveform.

d. Duration of application of test voltage: 5 seconds.

e. Rate of application of test voltage: 100 volts per second.

f. Points of application of test voltage: Between resistor terminals connected together and the conductive material.

g. Examinations after test: Resistors shall be examined for evidence of mechanical damage.

4.7.5.2 Barometric pressure. Resistors shall be tested in accordance with method 105 of MIL-STD-202. The following details and exceptions shall apply:

a. Method of mounting: as specified in 4.7.5.1a.

b. Test condition: B.

c. Test voltage during subjection to reduced pressure: As specified in table XIV.

d. Nature of potential: As specified in 4.7.5.1c.

e. Duration of application of test voltage: 5 seconds.

f. Rate of application: 100 volts per second.

g. Points of application of test voltage: As specified in 4.7.5.1f.

h. Examinations after test: As specified in 4.7.5.1g.

TABLE XIV. Voltages to be applied at barometric pressure.

Resistor wattage	Voltage applied
	Volts
0.125	200
0.250	325
0.500	450
1.000	625
2.000	625

4.7.6 Insulation resistance (see 3.12). Resistors shall be tested in accordance with method 302 of MIL-STD-202. The following details and exceptions shall apply:

a. Special preparations: As specified in 4.7.9a.

b. Test condition A for styles RCR05 and RCR07, test condition B for styles RCR20, RCR32, and RCR42.

c. Points of measurement: Between the resistor terminals connected together and the mounting strap.

4.7.7 Low temperature operation (see 3.13).

4.7.7.1 Mounting. Resistors shall be mounted by their terminals so that there is at least 1 inch of free air space around each resistor and the mounting is in such a position with respect to the air that it offers substantially no obstruction to the flow of air across and around the resistors.

4.7.7.2 Procedure. DC resistance shall be measured as specified in 4.7.2. Within 1 hour after this measurement, the resistors shall be placed in a cold chamber at room temperature. The temperature shall be gradually decreased to -65°C +0°C, -5°C, within a period of not less than 1.5 hours. For quality conformance inspection only, and at the option of the manufacturer, resistors may be placed in the cold chamber when the chamber is already at the extreme low temperature. After 1 hour of stabilization at this temperature, full rated continuous working voltage (see 3.7) shall be applied for 45 minutes. The resistors may be fully loaded individually or in parallel. Fifteen +5, -0 minutes after removal of voltage, the temperature in the chamber shall be gradually increased to room temperature within a period of not more than 8 hours. The resistors shall be removed from the chamber and maintained at a temperature of 25°C ±5°C for a period of approximately 24 hours; the dc resistance shall then be measured as specified in 4.7.2. Resistors shall then be examined for evidence of mechanical damage.

4.7.8 Thermal shock (see 3.14). Resistors shall be tested in accordance with method 107 of MIL-STD-202. The following details and exceptions shall apply:

a. Special mounting: As specified in 4.7.7.1.

b. Measurement of air temperature: The air temperature shall be measured by a suitable means and as near to the center of the group as possible. If a thermometer is used, it shall be mounted parallel to the axis of the resistors.

c. Test condition: A.

d. Measurements before and after cycling: DC resistance shall be measured as specified in 4.7.2, prior to the first cycle and within 24 hours after completion of the fifth cycle.

e. Examination after test: Resistors shall be examined for evidence of mechanical damage.

4.7.9 Moisture resistance (see 3.15). Resistors shall be tested in accordance with method 106 of MIL-STD-202. The following details and exceptions shall apply:

a. Mounting: Resistors shall be soldered by their leads to stand-off insulators 1/ on a suitable panel so that there will be at least 1 inch of free air space around each resistor. The spacing of the mounts shall be such that the length of each resistor lead is .375 ±.0625 inch when measured from the edge of the supporting terminal to the resistor body. In addition, all sample units shall be covered with a flat, non-corrosive, metal strap whose width is equal to the length of the resistors and of sufficient thickness to be rigid. A 0.075-inch thick layer of resilent, moisture-resistant material, having a resistivity of less than 1,000 ohm-centimeters, shall be bonded to the surface of the strap next to the resistors. Sufficient contact pressure shall be maintained between this material and the resistor in order that all color code bands shall be completely imbedded in the material. This is done by applying a compressive force between the strap and a cylinder, nonconducting rod held beneath the resistors (see figure 1). The mounting straps may be used to cover one or more resistors at a time and may be applied after the last cycle.

1/ Standoff insulators of polytetrafluoroethylene are preferred for use with resistors of high resistance values.

b. Initial measurements: Not less than 1.5 hours after resistors have been removed from the drying oven, the dc resistance shall be measured as specified in 4.7.2.

c. Loading voltage: During the first two hours of steps 1 and 4, a test potential equivalent to 100-percent rated wattage, but not exceeding the maximum rated voltage shall be applied to 50-percent of the resistors. The remaining 50 percent of the resistors shall be tested without any application of voltage.

d. Final measurements: Upon completion of step 6 of the final cycle, the resistors shall be conditioned at at temperature of 25°C ±2°C and at a relative humidity of 90 to 95 percent of a period of 1.5 to 3.5 hours. Upon removal from the chamber, resistors shall be permitted to dry for a maximum of 4 hours at room ambient conditions. The sample units shall not be subjected to forced circulating air during this test. DC resistance and insulation resistance shall be measured, as specified in 4.7.2 and 4.7.6, respectivily.

4.7.10 Short-time overload (see 3.16). Resistors shall be conditioned at 50°C +3°C, -0°C for 1 hour ±5 minutes. Allow resistors to stabilize to room temperature, not to exceed 30 minutes. DC resistance shall then be measured as specified in 4.7.2. Following this measurement, a potential of 2.5 times the rated continuous working voltage (see 3.7) shall be applied for 5 ±.5 seconds to the resistor terminals.

NOTE: Test potential should be established by use of dummy load in order to avoid excess stress on the test specimens.

In no case shall the voltage exceed the applicable value listed in table XV. Thirty minutes after removal of the test potential, the dc resistance shall again be measured as specified in 4.7.2.

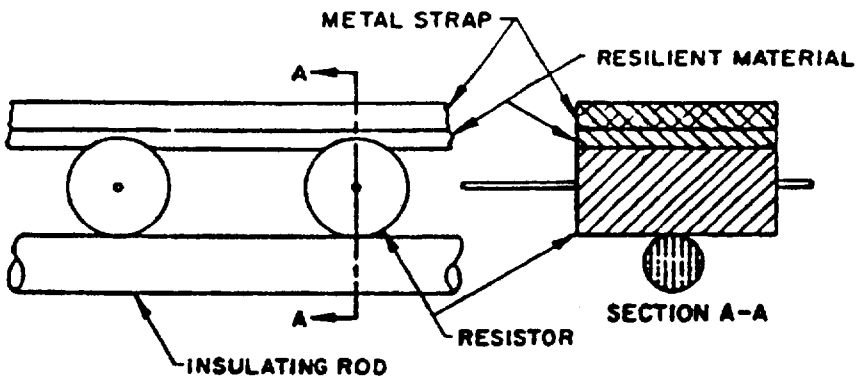

FIGURE 1. Resistor-contacting assembly for insulation-resistance measurements.

TABLE XV. Maximum overload voltage.

Power rating	Maximum overload voltage (dc or peak ac)
Watts	Volts
0.125	200
0.250	400
0.500	700
1.000	1,000
2.000	1,000

4.7.11 Terminal strength (see 3.17.1). Resistors shall be tested in accordance with method 211 of MIL-STD-202. The following details and exceptions shall apply:

a. Test condition: A.

b. Measurement before test: DC resistance shall be measured as specified in 4.7.2.

c. The resistors shall be clamped by one terminal lead.

d. The applied load shall be 5 pounds for all styles except RCR05; for style RCR05 the load shall be 2 pounds.

e. Examination after test: Resistors shall be examined for evidence of mechanical damage.

4.7.11.1 Twist test (see 3.17.2). Resistors shall be tested in accordance with method 211 of MIL-STD-202. The following details shall apply:

a. Test condition: D.

b. Test to be performed following tests specified in 4.7.11.

c. Following the test, dc resistance shall be measured as specified in 4.7.2, and resistors shall be examined for evidence of mechanical damage.

4.7.12 Resistance to soldering heat (see 3.18). Resistors shall be tested in accordance with method 210 of MIL-STD-202. The following details shall apply:

a. Measurement before test: DC resistance shall be measured as specified in 4.7.2.

b. Test condition: A for all styles except RCR05. For RCR05, the temperature of the solder shall be 250°C ±10°C for a period of 3 ±0.5 seconds.

c. Special preparation of specimen: Sample units shall not have been soldered during any of the previous tests.

d. Depth of immersion in molten solder: Within 24 ±4 hours after completion of test, the dc resistance shall be measured as specified in 4.7.2. Resistors shall be examined for evidence of mechanical damage.

4.7.13 Shock (specified pulse)(see 3.19). Resistors shall be tested in accordance with method 213 of MIL-STD-202. The following details and exceptions shall apply:

a. Special mounting means: Resistors shall be mounted on appropriate jig fixtures and supported by their leads at a distance .250 inch from the resistor body. These fixtures shall be constructed in a manner to insure that the points of the resistor-mounting supports shall have the same motion of the shock table. Resistors shall be mounted in relation to the test equipment in such a manner that the stress applied is in the direction which would be considered most detrimental. Test leads used during this test shall no longer than AWG size 22 stranded wire, so that the influence of the test lead on the resistor shall be held to a minimum. The test-lead length shall be no longer than necessary.

b. Measurement before shock: DC resistance shall be measured as specified 4.7.2.

c. Test condition: I.

d. Number and direction of applied shocks: The resistors shall be subjected to a total of 10 shocks in each of two mutually perpendicular planes, one perpendicular and the other parallel to the longitudinal axis of the resistor.

e. Measurement during shock: Each resistor shall be monitored to determine electrical discontinuity by a method which shall at least be sensitive enough to monitor or register, automatically any electrical discontinuity of 0.1 millisecond or greater duration.

f. Examination after test: Resistors shall be examined for evidence of mechanical and electrical damage.

4.7.14 Vibration, high frequency (see 3.20). Resistors shall be tested in accordance with method 204 of MIL-STD-202. The following details and exceptions shall apply:

a. Mounting of specimens: Resistors shall be mounted on an appropriate jig fixtures and supported by their leads at a distance .250 inch from the resistor body. These fixtures shall be constructed in a manner to insure that the points of the resistor-mounting supports shall have the same motion as the vibration table. The arrangement of the mounting shall be such that the body of the resistor is not restrained in any manner, but is allowed to respond to the vibration forces applied. Test leads used during this test shall be no larger than AWG 22 stranded wire, so that the test lead on the resistor shall be held to a minimum. The test lead length shall be no greater than is absolutely necessary. A shielded cable, which may be necessary because of the field surrounding the vibration table, shall be clamped to the resistor-mounting jig. In all cases, the resistors shall be mounted in relation to the test equipment in such a manner that the stress applied is in the direction which would be considered most detrimental.

b. Test condition: D.

c. Direction of motion: In each of two mutually perpendicular directions, one perpendicular and the other parallel to the longitudinal axis of the resistor. Six hours in each direction for a total of 12 hours.

d. Measurement during test: Each resistor shall be monitored to determine electrical discontinuity by a method which shall at least be sensitive enough to monitor or register, automatically, any electrical discontinuity of 0.1 millisecond or greater duration.

e. Measurement after vibration: DC resistance shall be measured as specified in 4.7.2.

f. Examination after test: Resistors shall be examined for evidence of mechanical and electrical damage.

4.7.15 Life (see 3.21). Resistors shall be tested in accordance with method 108 of MIL-STD-202. The following details and exceptions shall apply:

a. Method of mounting: Resistors shall be mounted and soldered (see 6.6), to lightweight terminals (see figure 2). The effective length of each lead shall be 1.000 ±.1875 inch. Resistors shall be so arranged that the temperature of any one resistor shall not appreciably influence the temperature of any other resistor. There shall be no circulation of air directly over the resistors other than that caused by heat of the resistors. The mounting terminal shall be of such thermal capacity that it may be maintained at the oven operating temperature.

b. Test temperature and tolerance: 70°C +15°C, -5°C; reference temperature +70°C ±5°C.

c. Initial measurements: Measurements may be made inside or outside the chamber.

1. Inside the chamber: When measurements are to made inside the chamber, the initial dc resistance shall be measured after mounting at the applicable test temperature, after temperature stabilization, and within 8 hours of exposure of the resistors to the test temperature. The initial measurement shall be used as the reference temperature for all subsequent measurements under the same conditions.

2. Outside the chamber: When measurements are to made outside the chamber, the initial dc resistance shall be measured after mounting at the room temperature. This initial measurement shall be used as the reference temperature for all subsequent measurements under the same conditions.

d. Operating conditions:

1. Group VI of table VI (qualification and subgroup 4, semiannually, table XI): One hundred percent rated dc continuous working voltage (see 3.7) or filtered or nonfiltered full wave rectified ac voltage shall be applied intermittently, 1.5 hours "on" and 0.5 hour "off" for the applicable number of hours. "On time" shall be 75 percent of the total elapsed time. During the "on" cycle, voltage shall be regulated and controlled to maintain rated continuous working voltage with ±5 percent. In case of a conflict, a referee potential regulated and controlled within 1 percent shall be used.

NOTE: If rectified ac is employed, a voltmeter capable of measuring true rms shall be used to prevent overloading of the specimen.

2. Group VIII of table VI (qualification) and all failure-rate determination testing: As specified in 4.7.15d.1 except that the voltage applied shall be equivalent to 50-percent rated wattage.

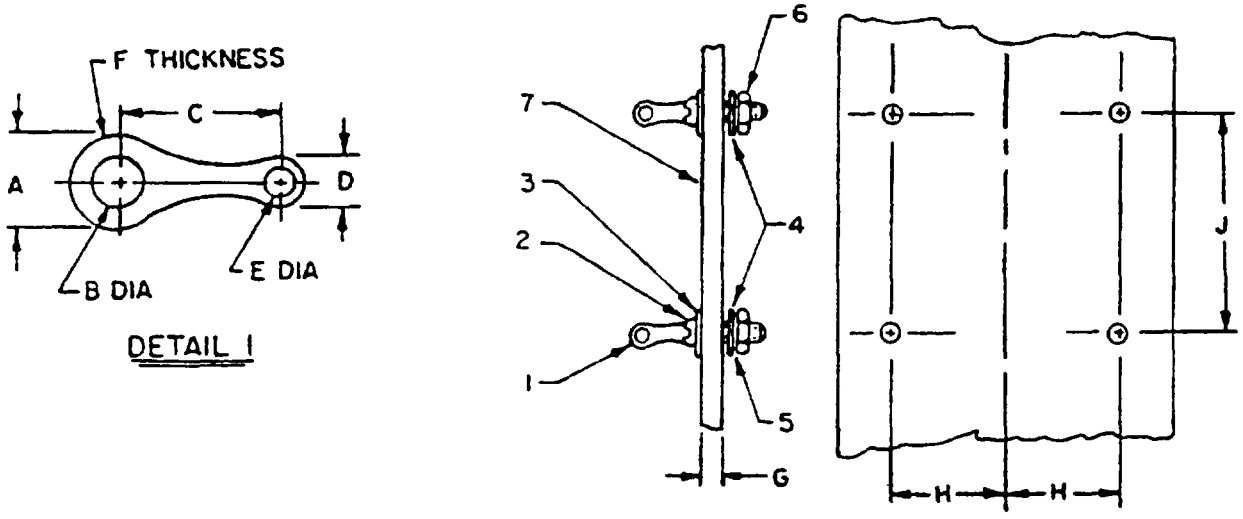

No.	Description
1	Solder lug, tinned brass catalog No. 2441, Cinch Mfg Corp, Chicago, Ill or equal,
2	RD HD MS No. 6-32 x .562 long, brass
3	Shakeproof washer steel, Parkerized
4	Flatwasher, brass for No. 6-32 MS
5	Lockwasher, brass for No. 6-32 MS
6	Hexagonal nut, brass No. 6-32, standard
7	Rack; phenolic

Dimensions		
Symbol	Inches	Millimeters
A	.312	7.91
B	.145	3.68
C	.625	15.88
D	.156	3.96
E	.094	2.39
F	.018	0.46
G	.375	9.53
H	.875	22.23
J	2.000	50.80

NOTE: Metric equivalents are given for general information only.

FIGURE 2. Suggested mounting-lug arrangement for life test.

e. Test conditions:

1. Qualification inspection table VI:

Group VI (100 percent rated wattage): 1,000 +48, -0 hours.

Group VIII (50 percent rated wattage): 2,000 +72, -0 hours continued to 10,000 +96, -0 hours.

2. Quality conformance inspection, group B, table XI:

Monthly, subgroup I (50 percent rated wattage): 10,000 +96, -0 hours.

Semiannually, subgroup 4 (100 percent rated wattage): 1,000 +48, -0.

f. Measurements during test :

1. Qualification inspection table VI:

Group VI (100 percent rated wattage): DC resistance shall be measured at the end of the 0.5 hour "off" periods after 50 +12, -0, 100 +12, -0, 250 +48,-0, 500 +48, -0, and 1,000 +48, -0 hours have elapsed.

Group VIII (50 percent rated wattage): DC resistance shall be measured at the end of the 0.5 hour "off" periods after 250 +48, -0, 500 +48, -0, 1,000 +48, -0, and 2,000 +72, -0 hours have elapsed. Every 2,000 +96, -0, hours thereafter for the continuation phase until 10,000 +96, -0 hours have elapsed.

2. Quality conformance inspection, group B, table XI:

Monthly subgroup 1 (50 percent rated wattage: DC resistance shall be measured at the end of the 0.5 hour period "off" periods 250 +48, -0, 500 +48, -0, 1,000 +48, -0, 2,000 +72, -0, and every 2,000 +96, -0 hours thereafter until 10,000 +96, -0 have elapsed.

Semiannually subgroup 4 (100 percent rated wattage): DC resistance shall be measured after 50 +12, -0, 100 +12, -0, 250 +48, -0, 500 +48, -0, and 1,000 +48, -0 hours have elapsed.

3. Examination after test: Resistors shall be examined for evidence of mechanical damage.

4.7.16 Solderability (see 3.22). Resistors shall be tested in accordance with method 208 of MIL-STD-202. The following detail shall apply:

Either one or two leads shall be tested as applicable (see table VIII).

4.7.17 Low temperature storage (see 3.23).

4.7.17.1 Mounting. Resistors shall be mounted in such a manner that there is at least 1 inch of free air space around each resistor, and in such a position with respect to air stream that the mounting offers substantially no obstruction to the flow of air across and around the resistors.

4.7.17.2 Procedure. DC resistance shall be measured as specified in 4.7.2. Within 1 hour after this measurement, the resistors shall be placed in a cold chamber at a temperature of -65°C ±2°C for a period of 24 ±4 hours. The resistors shall then be removed from the chamber and maintained at a temperature of 25°C for a period of approximately from 2 to 8 hours; the dc resistance shall again be measured as specified in 4.7.2. Resistors shall then be examined for evidence of mechanical damage.

4.7.18 Fungus (see 3.26). Unless certification is provided, resistors shall be tested in accordance with method 508 of MIL-STD-810. Resistors shall then be examined for evidence of fungus.

5. PACKAGING

5.1 Packaging requirements. The requirements for packaging shall be in accordance with MIL-R-39032.

6. NOTES

(This section contains information of a general or explanatory nature that may be helpful, but is not mandatory.)

6.1 Acquisition requirements. Acquisition documents must specify the following:

a. Title, number, and date of this specification.

b. Issue of DODISS to be cited in the solicitation, and if required, the specific issue of individual documents referenced (see 2.1 and 2.2).

c. Title, number, and date of the applicable associated detail specification, and the complete PIN (see 1.2.1 and 3.1).

d. Marking requirement for failure rate level (see 3.25).

e. Lead length: Specify 1.00 +.625, -0.000 inch for tape and reel packaging. If not specified, 1.5 ±.125 inch lead length will be supplied.

6.2 Qualification. With respect to products requiring qualification, awards will be made only for products which are at the time of award of contract, qualified for inclusion in the applicable Qualified Products List (QPL No.39008) whether or not such products have actually been so listed by that date. The attention of the contractors is called to these requirements, and manufacturers are urged to arrange to have the products that they propose to offer to the Federal Government tested for qualification in order that they may be eligible to be awarded contracts or purchase orders for the products covered by this specification. The activity responsible for the Qualified Products List is US Army Laboratory Command, Fort Monmouth, NJ; however, information pertaining to qualification of products may be obtained from the Defense Electronics Supply Center (DESC-E), Engineering Standardization Directorate, Dayton, OH 45444-5000.

6.3 Critical voltage and resistance values. The critical resistance value for any resistor type is the maximum resistance at which rated power input can be obtained without exceeding the maximum continuous working voltage. The maximum permissible input to resistors having resistance in excess of the critical value is limited by their maximum continuous working voltage and not by their rated power-handling capacity.

6.4 Excessive voltage. Application of nominal rated working voltage to a resistor having less than the nominal resistance tolerance will result in application of more than rated power with probable shortening of resistor life.

6.5 Peak voltage. When nonsinusoidal peak voltages in excess of 1.4 times the rated sine-wave continuous rms voltage are applied to the resistors, care should be taken to determine the stability of resistors for use in such applications.

6.6 Soldering. Care should be taken in soldering, since all properties of a composition resistor may be seriously affected when soldering irons are applied too close to a resistor body or for too long a period. The length of lead remaining between resistor body and soldering point should be not less than .250 inch, nor should the required soldering time exceed 3 seconds. When resistors are to be subjected to shock and high frequency virbration forces of the magnitudes enumerated in this specification, it is suggested that the resistors be mounted by their leads at a distance of .250 inch or less from the body. In this case, in order to avoid thermal damage to the resistors, a heat sink should be employed during soldering.

6.7 High altitude. All tests in this specification, with the exception of the dielectric withstanding voltage at reduced barometric pressure, are performed, at ambient atmospheric pressure. This fact should be considered when the use of these resistors for high altitude conditions is contemplated.

6.8 Selection and use information. Equipment designers should refer to MIL-STD-199, "Resistors, Selection and Use of", for a selection of standard resistor types and values for new equipment design. All applications and use information concerning these resistors are also provided in MIL-STD-199.

6.9 Out-of-tolerance resistors. Resistance shifts due to absorption of moisture are inherent in carbon composition resistors. Before being considered failures, out-of-tolerance resistors should be conditioned in a dry oven at a temperature of 100°C ±5°C for the duration shown below prior to conducting resistance measurements.

Style RCR05	25 ±4 hours
Style RCR42	130 ±4 hours
All other styles	96 ±4 hours

Resistors which continue to be out of tolerance after the above conditioning process shall be considered failures.

6.10 MIL-R-11 substitution data. Resistors of this specification, regardless of their failure rate designation, are substitutes for resistors of the same resistance value and tolerance specified in inactivated associated detail specifications of MIL-R-11 as follows:

Substitute specification	Inactivated specification
MIL-R-39008/1	MIL-R-11/8
MIL-R-39008/2	MIL-R-11/3
MIL-R-39008/3	MIL-R-11/6
MIL-R-39008/4	MIL-R-11/11
MIL-R-39008/5	MIL-R-11/7

6.11 Retinning leads. If retinning (hot solder dip) of the leads is required see 3.5.1.1.

6.12 Part or Identifying Number (PIN). PIN is a new term encompassing previous terms used in this specification such as part number, type designator, identification number, etc. (see 1.2.1).

6.13 Changes from previous issue. Marginal notations are not used in this revision to identify changes with respect to the previous issue due to the extensiveness of the changes.

APPENDIX

PROCEDURE FOR QUALIFICATION INSPECTION

10. SCOPE

10.1 Scope. This appendix details the procedure for submission of samples, with related data, for qualification inspection of resistors covered by this specification. The procedure for extending qualification of the required sample to other resistors covered by this specification is also outlined herein. This appendix is a mandatory part of the specification. The information contained herein is intended for compliance.

20. APPLICABLE DOCUMENTS. This section is not applicable to this appendix.

30. SUBMISSION

30.1 Sample. A sample consisting of 84 sample units, each of the lowest and highest resistance values in each style for which qualification is sought, shall be submitted. All sample units shall be resistance tolerance J (±5 percent). At the option of the manufacturer, 94 sample units may be supplied to allow 20 sample units to be submitted for group VII of table VI. When the lowest and highest resistance values submitted are respectively, below and above the critical value specified in table XVI, 84 sample units as practicable, of the critical value shall also be submitted in each style. One additional sample unit of each resistance value shall be submitted to permit substitution for the allowable defect in group I inspection.

30.2 Test data. When examinations and tests are to be performed at a Government laboratory, prior to submission all sample units shall be subjected to all of the examinations and tests indicated as destructive in table VI. Each submission shall be accompanied by the test data obtained from these examinations and tests. The performance of the destructive tests by the manufacturer on a duplicate set of sample units is encouraged, although not required. All test data shall be submitted in duplicate.

30.3 Description of items. The manufacturer shall submit a detailed description of the resistors being submitted for inspection, including materials used for the resistance element and the protective enclosure or coating.

TABLE XVI. Critical resistance values for qualification inspection. 1/

Style	Critical resistance value 2/
	Megohms
RCR05	0.18
RCR07	0.27
RCR20	0.27
RCR32	0.27
RCR42	0.12

1/ Maximum continuous working voltage shall be applied (see table VI).
2/ The critical resistance value is the maximum standard resistance value which will dissipate full wattage when the maximum continuous working voltage is applied.

APPENDIX

40. EXTENT OF QUALIFICATION

40.1 Resistance range. The resistance range included in the qualification of any one style shall be between any two adjacent resistance values which pass the required qualification inspection. Qualification of J (±5 percent) resistance tolerance resistors shall also qualify K (±10 percent) tolerance resistors.

40.2 Extension of qualification. The extension of qualification between failure rate levels shall be as specified in table XVII.

TABLE XVII. Extension of qualification between failure rate levels.

Failure rate level	Will qualify failure rate level
S	S, R, P, M
R	R, P, M
P	P, M
M	M

CONCLUDING MATERIAL

Custodians
- Army - ER
- Navy - EC
- Air Force - 85
- NASA - NA

Review activities
- Army - AR, MI
- Navy - AS, OS
- Air Force - 11, 80
- DLA - ES

User activities
- Army - AT, AV, ME
- Navy - MC
- Air Force - 19

Preparing activity
- Army - ER

Agent
- DLA - ES

(Project 5905-1199)

STANDARDIZATION DOCUMENT IMPROVEMENT PROPOSAL

INSTRUCTIONS

1. The preparing activity must complete blocks 1, 2, 3, and 8 In block 1, both the document number and revision letter should be given.
2. The submitter of this form must complete blocks 4, 5, 6, and 7.
3. The preparing activity must provide a reply within 30 days from receipt of the form.

NOTE: This form may not be used to request copies of documents, nor to request waivers, or clarification of requirements on current contracts. Comments submitted on this form do not constitute or imply authorization to waive any portion of the referenced document(s) or to amend contractual requirements.

I RECOMMEND A CHANGE:	1. DOCUMENT NUMBER MIL-R-39008C	2. DOCUMENT DATE (YYMMDD)

3. DOCUMENT TITLE Resistors, Fixed, Composition (Insulated), Established Reliability, General Specification For

4. NATURE OF CHANGE *(Identify paragraph number and include proposed rewrite, if possible. Attach extra sheets as needed.)*

5. REASON FOR RECOMMENDATION

6. SUBMITTER

a. NAME (Last, First, MI)	b. ORGANIZATION
c. ADDRESS (Include Zip Code)	d. TELEPHONE (Include Area Code) (1) Commercial (2) AUTOVON (If applicable) / 7. DATE SUBMITTED (YYMMDD)

8. PREPARING ACTIVITY

a. NAME	b. TELEPHONE (Include Area Code) (1) Commercial (2) AUTOVON
c. ADDRESS (Include Zip Code)	IF YOU DO NOT RECEIVE A REPLY WITHIN 45 DAYS, CONTACT: Defense Quality and Standardization Office 5203 Leesburg Pike, Suite 1403, Falls Church, VA 22041-3466 Telephone (703) 756-2340 AUTOVON 289-2340