DEFENSE LOGISTICS AGENCY
LAND AND MARITIME
P.O. BOX 3990
COLUMBUS, OHIO 43218-3990

April 26, 2012

MEMORANDUM FOR MILITARY/INDUSTRY DISTRIBUTION

SUBJECT: Initial Draft of **MIL-PRF-FILCON** (Connectors, Electromagnetic Interference (EMI) Filter Contact, Standard Reliability and High Reliability, General Specification for).

Project number: 59GP-2011-002

The subject document is now available for viewing and downloading from the DLA Land and Maritime - VA website:

http://www.landandmaritime.dla.mil/Downloads/MilSpec/Docs/MIL-PRF-FILCON/idprfFILCON.pdf

An initial draft of a new document which specifies the general requirements for military connectors which contain filtered contacts for the suppression of electromagnetic interference (EMI) has been generated with input from manufacturers, users, and the G11 committee. Two product reliability levels are offered: B level (standard reliability) and T level (high reliability).

Filter connectors furnished under this specification will be products that are authorized by the qualifying activity for listing on a qualified manufacturers list (QML).

An appendix is included with this specification which details the requirements for planar capacitor arrays used in filter connectors.

Concurrence or comments are required at this Center no later than 22 June 2012. Comments from military departments must be identified as either “Essential” or “Suggested”. Essential comments must be justified with supporting data. Military review activities should forward comments to their custodians of this office, as applicable, in sufficient time to allow for consolidating the department reply. Since Navy – EC is a custodian for this document; all Navy review activities should forward their comments directly to this Center.

The point of contact for this project is Mr. John Bonitatibus, DLA Land and Maritime - VAT, Post Office Box 3990, Columbus, OH 43218-3990. The preferred method of contact is via email. John can be reached at john.bonitatibus@dla.mil or 614-692-4709/DSN 850-4709.

//Signed//

Michael A. Radecki
Chief
Electronic Components Branch

NOTE: This draft, dated 26 April 2012, prepared by DLA - CC, has not been approved and is subject to modification.
DO NOT USE PRIOR TO APPROVAL. (Project 59GP-2011-002)

INCH POUND
MIL-PRF-FILCON
DRAFT

PERFORMANCE SPECIFICATION

CONNECTORS, ELECTROMAGNETIC INTERFERENCE (EMI)
FILTER CONTACT, STANDARD RELIABILITY AND HIGH
RELIABILITY, GENERAL SPECIFICATION FOR

This specification is approved for use by all Departments
and Agencies of the Department of Defense.

1. SCOPE

1.1 Scope. This specification covers the general requirements for military connectors which contain filters for the suppression of electromagnetic interference (EMI). Two product reliability levels are offered: B level (standard reliability) and T level (high reliability). Filter connectors furnished to the requirements of this specification contain planar capacitor arrays and ferrite beads as applicable for C, Pi, L-C, C-L, or T filter circuits. Filter connectors covered by this specification are capable of operation within a temperature range of -55°C to +125°C.

1.2 Classification.

1.2.1 Part or identifying number (PIN). Filter connectors specified herein (see 3.1) are identified by a PIN that consists of the basic number of the performance specification sheet followed by an assigned dash number (see 3.1), as shown in the following example:

1/ MFILCON	/01-	001
Performance specification	Specification sheet number number	Nonsignificant dash number (see 1.2.1.1)

1/ A “T” prefix is used in place of the “M” for T level product (see 1.2.2)

1.2.1.1 Dash number. The dash number is as specified in the individual specification sheets (see 3.1).

1.2.2 Product level. Two product levels of filter connectors are provided for in this specification.

a. B level – B level is the base product level of this specification and is intended for all applications except for space applications. B level filter connectors are those which have been subjected to and passed all applicable requirements, tests, and inspections detailed herein, including B level conformance inspection requirements.

b. T level - T level is the highest product level of this specification and is intended for space applications. T level filter connectors are those which have been subjected to and passed all applicable requirements, tests, and inspections detailed herein, including T level conformance inspection requirements.

Comments, suggestions, or questions on this document should be addressed to: DLA Land and Maritime - VAT, Post Office Box 3990, Columbus, OH 43218-3990 or e-mailed to capacitorfilter@dla.mil. Since contact information can change, you may want to verify the currency of this address information using the ASSIST Online database at https://assist.daps.dla.mil.

2. APPLICABLE DOCUMENTS

2.1 General. The documents listed in this section are specified in sections 3 and 4 of this specification. This section does not include documents cited in other sections of this specification or recommended for additional information or as examples. While every effort has been made to ensure the completeness of this list, document users are cautioned that they must meet all specified requirements of the documents cited in sections 3 and 4 of this specification, whether or not they are listed.

2.2 Government documents.

2.2.1 Specifications, standards, and handbooks. The following specifications, standards, and handbooks form a part of this document to the extent specified herein. Unless otherwise specified, the issues of these documents are those cited in the solicitation or contract.

DEPARTMENT OF DEFENSE SPECIFICATIONS

MIL-PRF-5606	-	Hydraulic Fluid, Petroleum Base; Aircraft, Missile, and Ordnance.
MIL-PRF-7808	-	Lubricating Oil, Aircraft Turbine Engine, Synthetic Base.

DEPARTMENT OF DEFENSE STANDARDS

MIL-STD-202	-	Electronic and Electrical Component Parts, Test Methods for.
MIL-STD-220	-	Method of Insertion Loss Measurement .
MIL-STD-790	-	Standard Practice for Established Reliability and High Reliability Qualified Products List (QPL) Systems for Electrical, Electronic, and Fiber Optic Parts Specifications.

(Copies of these documents are available online at https://assist.daps.dla.mil/quicksearch/ or from the Standardization Document Order Desk, 700 Robbins Avenue, Building 4D, Philadelphia, PA 19111-5094.)

2.3 Non-Government publications. The following documents form a part of this document to the extent specified herein. Unless otherwise specified, the issues of these documents are those cited in the solicitation or contract.

ELECTRONIC COMPONENTS ASSOCIATION (ECA)

EIA-364	-	Electrical Connector / Socket Test Procedures Including Environmental Classifications.
EIA/ECA-364-06	-	Contact Resistance Test Procedure for Electrical Connectors.
EIA-364-20	-	Withstanding Voltage Test Procedure For Electrical Connectors, Sockets, and Coaxial Contacts.
EIA/ECA-364-21	-	Insulation Resistance Test Procedure For Electrical Connectors, Sockets, and Coaxial Contacts.
EIA-364-27	-	Mechanical Shock (Specified Pulse) Test Procedure For Electrical Connectors
EIA/ECA-364-28	-	Vibration Test Procedure For Electrical Connectors and Sockets
EIA-364-31	-	Humidity Test Procedure For Electrical Connectors and Sockets.
EIA-364-32	-	Thermal Shock (Temperature Cycling) Test Procedure For Electrical Connectors and Sockets.

(Copies of these documents are available from http://www.eciaonline.org or Electronic Components Association, 2214 Rock Hill Rd., Suite 170, Herndon, VA 20170.)

RTCA

DO 160	-	Environmental Conditions and Test Procedures for Airborne Equipment

(Copies of this document are available from http://www.rtca.org or RTCA, Inc., 1150 18th Street NW, Suite 910, Washington, DC 20036.)

2.4 Order of precedence. Unless otherwise noted herein or in the contract, in the event of a conflict between the text of this document and the references cited herein (except for related specification sheets), the text of this document takes precedence. Nothing in this document, however, supersedes applicable laws and regulations unless a specific exemption has been obtained.

3. REQUIREMENTS

3.1 Specification sheets. The individual part requirements shall be specified herein and in accordance with the applicable specification sheets. In the event of any conflict between requirements of this specification and the specification sheets, the latter shall govern.

3.2 Qualification. Filter connectors furnished under this specification shall be products that are authorized by the qualifying activity for listing on the applicable qualified manufacturers list (QML) before contract award (see 4.2 and 6.3). Only filter connectors listed or approved for listing on the QML which meet all the performance requirements of the applicable specification sheets for the applicable quality level shall be marked and delivered. In addition, manufacturers shall obtain certification from the qualifying activity that the requirements of 3.2.1 and of 4.1 have been met and are being maintained.

3.2.1 QML quality system. The manufacturer shall establish and maintain a quality system for filter connectors furnished to this specification that meets the requirements of appendix D and MIL-STD-790.

3.2.2 Qualification process. The qualification process shall be as follows:

a. MIL-STD-790 program.

b. Quality system in accordance with appendix D.

c. Qualification inspection in accordance with appendix A and table X on samples that represent the filter connector style(s) for which qualification is sought.

d. Upon completion of qualification testing, a report shall be prepared that includes a complete parts list for all components used in the assemblies, listing the change level for each, along with a process flow with the applicable change level at the time the filter connector was assembled. The DLA Land and Maritime audits will be performed using these base line documents.

3.3 Product assurance requirements. Two levels of filter connector reliability assurance are provided for in this specification. T level and B level filter connectors shall be those which have been subjected to and passed all applicable requirements, test and inspections detailed herein, including qualification and conformance inspection requirements for the specified class. T level is the highest product assurance level of this specification and is intended for space applications.

3.4 Mating connector. The military part number of the connector to which the filter connector is intended to mate shall be specified (see 3.1).

3.5 Shell style. The shell style of the filter connector, if applicable, shall be as specified (see 3.1). A filter connector can be a hermetic or non-hermetic receptacle (box mount, wall mount, through bulkhead mount (a receptacle interface on each side of the mounting flange), or jam nut mount), plug connector, or adapter (connector saver with a plug-receptacle interface at opposite ends of the shell).

3.6 Filter connector class. The filter connector class, if applicable, shall be the same as and meet the requirements of the connector to which the filter connector is intended to mate (see 3.1).

3.7 Insert arrangement. The insert arrangement shall be the opposite of the insert arrangement of the connector to which the filter connector is intended to mate (see 3.1).

3.8 Contact gender. The contact gender shall be the opposite of the contact gender of the connector to which the filter connector is intended to mate (see 3.1) as shown in table I.

TABLE I. Contact gender.

Symbol	Contact gender
P	Pin contact insert
S	Socket contact insert

3.9 Contact termination. The contact termination shall be specified as shown in table II (see 3.1).

TABLE II. Contact termination style.

Symbol	Contact termination style
C	Crimp
S	Solder cup
P	PC tail

3.10 Shell polarization. The shell polarization, if applicable, shall be the same as the polarization of the connector to which the filter connector is intended to mate (see 3.1).

3.11 Voltage rating. The working voltage rating of the filter connector shall be 200 VDC or as specified (see 3.1).

3.12 Filter type. The filter type shall be as specified (see 3.1) as shown in table III and described in figure I.

TABLE III. Filter type.

Symbol	Filter type	Application
C	C	High source and high load impedance
P	Pi	Unknown source or medium source and load impedance
L1	C-L	High source and low load impedance 1/
L2	L-C	Low source and high load impedance 2/
T	T	Low source and low load impedance

1/ The inductive element shall be positioned toward the rear of the connector.
2/ The inductive element shall be positioned toward the face of the connector.

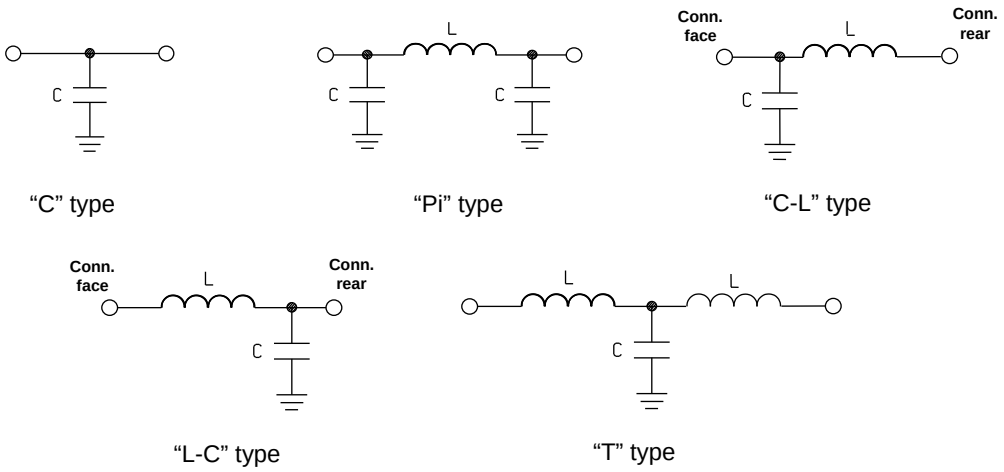

FIGURE I. Filter types.

3.13 Filter characteristic. The filter characteristic shall be as specified (see 3.1) as shown in tables IV, V, VI, and VII.

TABLE IV. "C" type filter electrical characteristics.

Symbol	Capacitance (pF)		Minimum insertion loss (dB), 25°C			
			Test frequencies			
	Min	Max	1 MHz	10 MHz	100 MHz	1000 MHz
A	19000	28000	6	24	41	50
B	16000	22500	5	23	39	49
C	9000	16500	3	16	35	46
D	4000	6000	-	8	28	41
E	1650	2500	-	4	21	34
F	400	650	-	-	10	23
G	200	300	-	-	5	17

TABLE V. "Pi" type filter electrical characteristics.

Symbol	Capacitance (pF)		Minimum insertion loss (dB), 25°C			
			Test frequencies			
	Min	Max	1 MHz	10 MHz	100 MHz	1000 MHz
A	38000	56000	10	40	62	66
B	32000	45000	8	35	60	62
C	18000	33000	5	25	57	60
D	8000	12000	1	14	50	58
E	3300	5000	-	8	40	52
F	800	1300	-	2	15	32
G	400	600	-	0.8	13	22

TABLE VI. "C-L" and "L-C" type filter electrical characteristics.

Symbol	Capacitance (pF)		Minimum insertion loss (dB), 25°C			
			Test frequencies			
	Min	Max	1 MHz	10 MHz	100 MHz	1000 MHz
A	19000	28000	6	25	42	52
B	16000	22500	6	24	41	51
C	9000	16500	3	17	38	48
D	4000	6000	-	9	30	43
E	1650	2500	-	6	23	36
F	400	650	-	-	12	25
G	200	300	-	-	6	19

TABLE VII. "T" type filter electrical characteristics.

Symbol	Capacitance (pF)		Minimum insertion loss (dB), 25°C			
			Test frequencies			
	Min	Max	1 MHz	10 MHz	100 MHz	1000 MHz
A	19000	28000	6	25	42	52
B	16000	22500	6	24	41	51
C	9000	16500	3	17	38	48
D	4000	6000	-	9	30	43
E	1650	2500	-	6	23	36
F	400	650	-	-	12	25
G	200	300	-	-	6	19

3.14 Contact identification. Each contact shall be identified (see 3.1) as ground, feed-through, or filtered as applicable. Filtered contacts shall be identified by the applicable filter type and filter characteristic (see 3.12 and 3.13).

3.15 Materials. The materials shall be as specified herein. However, when a definite material is not specified, a material shall be used which enables the filter connectors to meet the performance requirements of this specification. Acceptance or approval of any constituent material shall not be construed as a guarantee of the acceptance of the finished product.

3.15.1 Pure tin. The use of pure tin, as an underplate or final finish, is prohibited both internally and externally on all filter connector components. Tin content of filter connector components and solder shall not exceed 97 percent, by mass. Tin shall be alloyed with a minimum of 3 percent lead, by mass (see 6.5).

3.15.2 Connector components. Individual components within the filter connector shall meet the component requirements of the connector to which the filter connector is intended to mate (see 3.1). The individual components shall undergo the applicable B or T level requirements at the piece-part level.

3.15.2.1 Contact material and plating. The contact material and plating shall be the same as and meet the requirements of the contact material and plating in the connector to which the filter connector is intended to mate (see 3.1).

3.15.2.2 Shell material and finish. The shell material and finish shall be the same as and meet the requirements of the shell material and finish of the connector to which the filter connector is intended to mate (see 3.1).

3.15.3 Filter components.

3.15.3.1 Planar capacitor array

3.15.3.1.1 Ceramic material. The material used in the manufacture of planar capacitor arrays shall be as specified from table VIII.

TABLE VIII. Capacitance change with reference to +25°C.

Characteristic	Steps A through D of table XVI Bias = 0 volts	Steps E through G of table XVI Bias = rated voltage
BP	0 ±30 ppm/°C	0 ±30 ppm/°C
BX	±15 percent	+15, -25 percent
C0G	0 ±30 ppm/°C	N/A
X7R	±15 percent	N/A

3.15.3.1.2 B level filter connectors. Planar capacitor arrays used in B level filter connectors shall meet the requirements of appendix B of this specification for B level.

3.15.3.1.3 T level filter connectors. Planar capacitor arrays used in T level filter connectors shall meet the requirements of appendix B of this specification for T level.

3.16 Interface and physical dimensions. The filter connector shall meet the interface dimensions of the connector to which it is intended to mate (see 3.1).

3.17. Mounting. Mounting requirements (front or rear), if applicable, shall be as specified (see 3.1).

3.18. Interchangeability. The filter connector shall meet the interchangeability requirements of the connector to which it is intended to mate (see 3.1).

3.19 Visual inspection. The filter connectors shall be inspected for anomalies as specified in 4.10.1.

3.20 Dielectric withstanding voltage (DWV). When filter connectors are tested as specified in 4.10.2, there shall be no breakdown, flashover, or impairment of any characteristics sufficient to cause failure of the filter connector.

3.21 Insulation resistance. Unless otherwise specified (see 3.1), when filter connectors are tested as specified in 4.10.3, the insulation resistance shall meet the following requirements:

a. Individual contacts:

(1) At +25°C: Not less than 5 Gohms.

(2) At +125°C: Not less than 1 Gohm.

b. Contacts connected in parallel (see 6.10):

(1) At +25°C: Not less than 5 Gohms divided by the number of contacts connected in parallel (see 6.10).

(2) At +125°C: Not less than 1 Gohm divided by the number of contacts connected in parallel (see 6.10).

Note: The specified IR limits are set low to support automatic contact testers. Higher limits would result in excessively long test times in multi-pin filter connectors. Actual IR readings may be 1 or more orders of magnitude greater than minimum limits specified.

Insulation resistance (+25°C) may be combined with DWV by measuring the insulation resistance at the DWV level. If combined with DWV, there shall be no evidence of breakdown or flashover.

3.22 Capacitance to ground. When filter connectors are tested as specified in 4.10.4, the capacitance to ground shall be as specified (see 3.1).

3.23 Crosstalk capacitance. Unless otherwise specified (see 3.1), when filter connectors are tested as specified in 4.10.5, the crosstalk capacitance to any adjacent or nonadjacent contact shall be less than 25 pF for BX and X7R or less than 10 pF for BP or C0G.

3.24 Dissipation factor. Unless otherwise specified (see 3.1), when filter connectors are tested as specified in 4.10.6, the dissipation factor shall not be greater than 2.5 percent for BX or X7R characteristic, 0.15 percent for BP or C0G characteristic.

3.25 Thermal shock When tested as specified in 4.10.7, filter connectors shall show no evidence of cracking or fracture. In addition, filter connectors shall meet the following requirements:

a. Dielectric withstanding voltage (at sea level): As specified in 3.20.

b. Insulation resistance (+25°C): As specified in 3.21.

c. Capacitance to ground: As specified in 3.22.

d. Dissipation factor: As specified in 3.24.

e. Visual inspection: As specified in 3.19.

3.26 Voltage conditioning. When tested as specified in 4.10.8 (see 6.10), filter connectors shall meet the following requirements:

a. Insulation resistance (+125°C): As specified in 3.21 for contacts connected in parallel.

b. Dielectric withstanding voltage (at sea level): As specified in 3.20.

c. Insulation resistance (+25°C): As specified in 3.21.

d. Capacitance to ground: As specified in 3.22.

e. Dissipation factor: As specified in 3.24.

f. Visual inspection: As specified in 3.19.

3.27 Insertion loss. When filter connectors are tested as specified in 4.10.9, the insertion loss shall not be less than specified (see 3.1).

3.28 Crosstalk insertion loss. Unless otherwise specified (see 3.1), when filter connectors are tested as specified in 4.10.10, the crosstalk insertion loss to any adjacent or nonadjacent contact shall be 80db, minimum.

3.29 Dielectric characteristic. When tested as specified in 4.10.11, the capacitance change over the specified temperature range shall not exceed the limits specified in table VIII. The capacitance value obtained in table XV, step C shall be considered as the reference point.

3.30 Real time radiographic inspection (T level only). When filter connectors are radiographed as specified in 4.10.12, filter connectors shall meet the following requirements:

a. Construction: Lots shall be of homogeneous construction, as specified (see 3.1).

b. Faulty connections: There shall be no evidence of improperly made connections.

c. Misaligned parts: All elements of the filter connector shall be in proper relationship to one another (see 3.1)

d. Extraneous material: The interior of the filter connector shall be free of any harmful extraneous material or particles.

e. Solder defects: All solder joints shall be well formed and positioned with indications of good wetting and adherence to the soldered surface. There shall be no reverse angle at the solder edge.

f. Physical damage: There shall be no nicks, gouges, cracks, or other imperfections in the contacts, planar capacitor arrays, ferrites, or other internal elements.

3.31 Contact retention. When tested as specified in 4.10.13, filter connector inserts shall retain their contacts. In addition, the axial displacement of contacts shall not exceed .015 inches while under the test load.

3.32 Contact engagement and separating force (socket contacts only in filter connector). When tested as specified in 4.10.14, filter connectors shall meet the requirements of the connector to which it is intended to mate (see 3.1). In addition, filter connectors shall meet the following requirements:

a. Dielectric withstanding voltage (at sea level): As specified in 3.20.

b. Insulation resistance (+25°C): As specified in 3.21.

c. Capacitance to ground: As specified in 3.22.

d. Dissipation factor: As specified in 3.24.

e. Visual inspection: As specified in 3.19.

3.33 Air leakage (hermetic connectors only). When tested as specified in 4.10.15, filter connectors shall meet the requirements of the connector to which it is intended to mate (see 3.1). In addition, filter connectors shall meet the following requirements:

a. Dielectric withstanding voltage (at sea level): As specified in 3.20.

b. Insulation resistance (+25°C): As specified in 3.21.

c. Capacitance to ground: As specified in 3.22.

d. Dissipation factor: As specified in 3.24.

e. Visual inspection: As specified in 3.19.

3.34 Operating forces (when applicable). When tested as specified in 4.10.16, filter connectors shall meet the operating force requirements of the connector to which it is intended to mate (see 3.1). In addition, filter connectors shall meet the following requirements:

a. Dielectric withstanding voltage (at sea level): As specified in 3.20.

b. Insulation resistance (+25°C): As specified in 3.21.

c. Capacitance to ground: As specified in 3.22.

d. Dissipation factor: As specified in 3.24.

e. Visual inspection: As specified in 3.19.

3.35 Voltage spike (when specified, see 3.1). When tested as specified in 4.10.17, filter connectors shall show no evidence of flashover, degradation, or breakdown. In addition, filter connectors shall meet the following requirements:

a. Dielectric withstanding voltage (at sea level): As specified in 3.20.

b. Insulation resistance (+25°C): As specified in 3.21.

c. Capacitance to ground: As specified in 3.22.

d. Dissipation factor: As specified in 3.24.

e. Visual inspection: As specified in 3.19.

3.36 Lightning strike (when specified, see 3.1). When tested as specified in 4.10.18, filter connectors shall show no evidence of flashover, degradation, or breakdown. In addition, filter connectors shall meet the following requirements:

a. Dielectric withstanding voltage (at sea level): As specified in 3.20.

b. Insulation resistance (+25°C): As specified in 3.21.

c. Capacitance to ground: As specified in 3.22.

d. Dissipation factor: As specified in 3.24.

e. Visual inspection: As specified in 3.19.

3.37 Contact resistance. When tested as specified in 4.10.19, using the test current and wire size specified in table IX, contacts in the mated condition shall meet the contact resistance requirements in table IX.

TABLE IX. Contact resistance.

Contact size	Wire size	Test current	Maximum millivolt drop (millivolts)	
			Initial	After corrosion
22	.020 1/	3.0	70	75
22	22	5.0	73	88
20	.030 1/	5.0	65	70
20	20	7.5	55	66
16	16	13.0	49	59

1/ PCB contacts.

3.38 Ground contact resistance (when specified, see 3.1). When filter connectors are tested as specified in 4.10.20, the voltage drop shall be no more than 3.0 mV.

3.39 Water immersion (not applicable to adapter filter connectors). When tested as specified in 4.10.21, filter connectors shall show no evidence of air leakage as demonstrated by repetitive bubbling. In addition, filter connectors shall meet the following requirements:

a. Dielectric withstanding voltage (at sea level): As specified in 3.20.

b. Insulation resistance (+25°C): 100 Megohms, minimum.

c. Capacitance to ground: As specified in 3.22.

d. Dissipation factor: As specified in 3.24.

e. Visual inspection: As specified in 3.19.

When vacuum dried as specified in 4.10.21f, filter connectors shall meet the following requirements:

f. Dielectric withstanding voltage (at sea level): As specified in 3.20.

g. Insulation resistance (+25°C): As specified in 3.21.

3.40 Insert retention. When tested as specified in 4.10.22, the inserts of filter connectors shall not be dislocated from their original positions.

3.41 Fluid immersion (when specified, see 3.1). When tested as specified in 4.10.23, filter connector shall meet the coupling torque requirements of the connector to which the filter connector is intended to mate (see 3.1). In addition, filter connectors shall meet the following requirements:

a. Capacitance to ground: As specified in 3.22.

b. Dissipation factor: As specified in 3.24.

c. Visual inspection: As specified in 3.19. In addition, filter connectors shall be visually examined with the unaided eye for evidence of degradation such as:

(1) Swelling, cracking, or pitting of any resilient material.

(2) Loss of seal or adhesive bonding between two bonded surfaces.

(3) Softening of any material.

3.42 Shock. When tested as specified in 4.10.24 (see 6.11), filter connectors shall show no signs of damage or breakage, or exhibit any discontinuities greater than 1 µsec. In addition, filter connectors shall meet the following requirements:

a. Dielectric withstanding voltage (at sea level): As specified in 3.20.

b. Insulation resistance (+25°C): As specified in 3.21.

c. Capacitance to ground: As specified in 3.22.

d. Dissipation factor: As specified in 3.24.

e. Visual inspection: As specified in 3.19.

3.43 Random vibration. When tested as specified in 4.10.25 (see 6.11), filter connectors shall not crack or break, exhibit any discontinuities greater than 1 µsec, or loosening of parts. Receptacles shall retain plugs in full engagement during vibration. In addition, filter connectors shall meet the following requirements:

a. Dielectric withstanding voltage (at sea level): As specified in 3.20.

b. Insulation resistance (+25°C): As specified in 3.21.

c. Capacitance to ground: As specified in 3.22.

d. Dissipation factor: As specified in 3.24.

e. Visual inspection: As specified in 3.19.

3.44 Humidity. When tested as specified in 4.10.26, filter connectors shall meet the requirements of the connector to which it is intended to mate (see 3.1). In addition, filter connectors shall meet the following requirements:

a. Dielectric withstanding voltage (at sea level): As specified in 3.20.

b. Insulation resistance (+25°C): As specified in 3.21.

c. Capacitance to ground: As specified in 3.22.

d. Dissipation factor: As specified in 3.24.

e. Visual inspection: As specified in 3.19.

3.45 Humidity, steady-state, low voltage (T level only). When tested as specified in 4.10.27, filter connectors shall show no evidence of mechanical damage and marking shall remain legible. In addition, filter connectors shall meet the following requirements:

a. Insulation resistance (+25°C): As specified in 3.21, except the test voltage shall be 1.3 V dc.

b. Capacitance to ground: As specified in 3.22.

c. Dissipation factor: As specified in 3.24.

d. Visual inspection: As specified in 3.19.

3.46 Resistance to soldering heat (when specified, see 3.1). When tested as specified in 4.10.28, filter connectors with solderable, nonremovable contacts shall show no evidence of internal or external damage. In addition, filter connectors shall meet the following requirements:

a. Dielectric withstanding voltage (at sea level): As specified in 3.20.

b. Insulation resistance (+25°C): As specified in 3.21.

c. Capacitance to ground: As specified in 3.22.

d. Dissipation factor: As specified in 3.24.

e. Visual inspection: As specified in 3.19.

3.47 Salt spray (corrosion). When tested as specified in 4.10.29, filter connectors shall meet the requirements of the connector to which it is intended to mate (see 3.1).

3.48 Life. When tested as specified in 4.10.30, filter connectors shall meet the following requirements:

a. Insulation resistance (+125°C): As specified in 3.21 for contacts connected in parallel.

b. Dielectric withstanding voltage (at sea level): As specified in 3.20.

c. Insulation resistance (+25°C): As specified in 3.21.

d. Capacitance to ground: As specified in 3.22.

e. Dissipation factor: As specified in 3.24.

f. Visual inspection: As specified in 3.19.

3.49 Coupling torque. When tested as specified in 4.10.31, filter connectors shall meet the requirements of the connector to which it is intended to mate (see 3.1).

3.50 Dielectric voltage breakdown. When measured as specified in 4.10.32, $\overline{X} - 3\sigma$ (the mean – 3 standard deviations) shall be greater than 250 percent of the dc rated voltage of the filter connector.

3.51 Marking.

3.51.1 Filter connector marking. Filter connectors shall be marked in accordance with method I of MIL-STD-1285 with the following information: JAN marking (see 3.51.3), part or identifying number (PIN) (see 1.2.1), date code and lot symbol (LDC), and the commercial or government entity number (CAGE). Metal stamping shall be accomplished before plating. Additionally, the outside surface of the filter connector shell shall be marked with the words “FILTER CONTACTS” in a contrasting color to the basic shell plating, in at least two places that are readily visible when servicing the mounted filter connector.

3.51.2 Contact location identification. Contact locations shall be identified as indicated in the applicable military standard covering the connector to which the filter connector is intended to mate. All positions shall be identified on the front face of the insert except where space limitations make this impracticable. Location of contact identifying characters shall be in close proximity to the holes but need not be placed exactly where indicated in the applicable military standard covering the connector to which the filter connector is intended to mate. The preferred color of the contact identifying character is white. When the background is a color against which white is difficult to distinguish, a color will be chosen for which the identifying character can be easily distinguished.

3.51.3 JAN and J marking. The United States Government has adopted, and is exercising legitimate control over the certification marks “JAN” and “J”, respectively, to indicate that items so marked or identified are manufactured to, and meet all the requirements of military specifications. Accordingly, items acquired to, and meeting all of the criteria specified herein and in all applicable detail specifications shall bear the certification mark “JAN” except that items too small to bear the certification mark “JAN” shall bear the letter “J”. The “JAN” or “J” shall be placed immediately before the part number except that if such location would place a hardship on the manufacturer in connection with such marking, the “JAN” or “J” may be located on the first line above or below the part number. Items furnished under contracts or orders which either permit or require deviation from the conditions or fails to meet the requirements of this specification and the applicable specification sheets or detail specifications, the manufacturer shall remove the “JAN” or the “J” from the sample tested and also from all items represented by the sample. The “JAN” or “J” certification mark shall not be used on products acquired to contractor drawings or specifications. The United States Government has obtained Certificate of Registration No. 504,860 for the certification mark “JAN”.

3.51 Recycled, recovered, or environmentally preferable materials. Recycled, recovered, or environmentally preferable materials should be used to the maximum extent possible provided that the material meets or exceeds the operational and maintenance requirements, and promotes economically advantageous life cycle costs.

3.52 Workmanship. Filter connectors shall be processed in such a manner as to be uniform in quality and shall be free from cold soldering, corrosion, pits, dents, cracks, rough sharp edges, misalignments, and other defects that will affect life, serviceability, or appearance.

4. VERIFICATION

4.1 Classification of inspections. The inspection requirements specified herein shall be classified as follows:

a. Qualification inspection (see 4.4).

b. Verification of qualification (see 4.5).

c. Conformance inspection (see 4.6).

(1) Group A inspection (see 4.6.3).

(2) Group B inspection (see 4.6.4).

4.2 Quality system. The manufacturer shall implement and maintain a quality system in accordance with appendix D and MIL-STD-790. Evidence of such compliance shall be verified by the qualifying activity as a prerequisite for qualification and continued qualification.

4.2.1 Device verification. The manufacturer shall implement and maintain a verification program which demonstrates the filter connectors meet the requirements of section 3. The standard verification flow is outlined in section 4.

4.2.2 Purchased raw materials (T level only). The following documentation for purchased raw materials shall be retained:

a. Procurement documentation: Traceability.

b. Physical and chemical property data.

c. Performance evaluation/characterization data.

4.2.3 In-house prepared materials (T level only). The following documentation for in-house prepared materials shall be retained:

a. Fabrication process control data.

b. Physical and chemical property data.

c. Performance evaluation/characterization data.

4.2.4 Manufacturing lot performance information (T level only). Lot performance information relating to material, process, lot conformance, inspections, and products shall be retained by the manufacturer for 10 years from the date of the manufacture of the parts.

4.3 Inspection conditions. Unless otherwise specified, all inspections shall be performed in accordance with the test conditions specified in the "GENERAL REQUIREMENTS" of MIL-STD-202, except the relative humidity shall not exceed 75 percent. Unless otherwise specified, the accuracy of all test voltage measurements shall be within ±2.0 percent of the specified voltage. All test temperatures above +25°C shall have a tolerance of +4°C, -0°C unless otherwise specified.

4.3.1 Reference measurements. When requirements are based on comparative measurements made before and after conditioning, the reference measurement shall be considered the last measurement made at +25°C ± 3°C prior to conditioning. Unless reference measurements have been made within 30 days prior to the beginning of conditioning, they shall be repeated.

4.4 Qualification inspection. Qualification inspection shall be performed at a laboratory acceptable to the Government (see 6.3) on sample units produced with equipment and procedures normally used in production.

4.4.1 Sample size. The number of units comprising a sample of filter connectors to be submitted for qualification inspection shall be as specified in appendix A. Samples submitted to qualification shall have successfully completed the group A and B inspections as applicable.

4.4.2 Test routine. Qualification samples shall be subjected to the tests of table X as follows:

a. One filter connector and its mating plug shall be subjected to the tests of group 1 of table X.

b. One filter connector and its mating plug shall be subjected to the tests of group 2 of table X.

c. One filter connector and its mating plug shall be subjected to the tests of group 3 of table X.

4.4.3 Failures. Any failure during the qualification inspection (see table X) shall be cause for refusal to grant qualification. A failure in the mating plug shall not constitute a failure of the filter connector qualification test. The failed mating plug may be replaced.

4.5 Verification of qualification. Every 2 years, the manufacturer shall provide verification of qualification to the qualifying activity. Continuation of qualification shall be based on meeting the following requirements:

a. Quality system and MIL-STD-790 program.

b. The filter connector design, construction, basic materials or critical processes have not been modified without prior approval from the qualifying activity.

c. Lot rejection for group A inspection does not exceed 10 percent or one lot, whichever is greater.

d. Group C inspection.

TABLE X. Qualification inspection.

Inspection	Requirement paragraph	Test method paragraph	Test group		
			1	2	3
Visual inspection	3.19	4.10.1	X	X	X
Dielectric withstanding voltage (at sea level) 1/	3.20	4.10.2	X	X	X
Insulation resistance (+25°C) 1/	3.21	4.10.3	X	X	X
Capacitance to ground	3.22	4.10.4	X	X	X
Cross talk capacitance 2/	3.23	4.10.5	X	X	X
Dissipation factor	3.24	4.10.6	X	X	X
Insertion loss (+25°C, 100MHz)	3.27	4.10.9	X	X	X
Cross talk insertion loss	3.28	4.10.10	X	X	X
Dielectric characteristic	3.29	4.10.11	X		
Contact retention	3.31	4.10.13	X	X	
Operating forces (plug connector only)	3.34	4.10.16	X	X	
Contact engagement and separating forces (socket contacts only)	3.32	4.10.14	X	X	
Voltage spike (when specified, see 3.1)	3.35	4.10.17	X	X	
Lightning (when specified, see 3.1)	3.36	4.10.18	X	X	
Capacitance (at temperature extremes)	3.22	4.10.4	X	X	
Dielectric withstanding voltage (at altitude)	3.20	4.10.2	X	X	
Air leakage (hermetic connectors only)	3.33	4.10.15	X	X	
Insulation resistance (+125°C)	3.21	4.10.3	X	X	
Insertion loss (at elevated ambient temperature)	3.27	4.10.9	X	X	
Contact resistance	3.37	4.10.19		X	
Ground contact resistance (when specified, see 3.1)	3.38	4.10.20		X	
Thermal shock	3.25	4.10.7	X	X	
Water immersion	3.39	4.10.21	X	X	
Humidity (B level only)	3.44	4.10.26	X		
Humidity, steady state (T level only)	3.45	4.10.27	X		
Life (at elevated ambient temperature)	3.48	4.10.30		X	
Vibration	3.43	4.10.25	X		
Shock	3.42	4.10.24	X		
Insert retention	3.40	4.10.22		X	
Contact retention	3.31	4.10.13		X	
Salt spray (corrosion)	3.47	4.10.29		X	X
Contact resistance	3.37	4.10.19	X	X	
Ground contact resistance (when specified, see 3.1)	3.38	4.10.20	X	X	
Operating forces (plug connector only)	3.34	4.10.16			X
Contact engagement and separating forces (socket contacts only)	3.32	4.10.14	X	X	
Fluid immersion, lubricating oil (when specified, see 3.1) 3/	3.41	4.10.23	X		
Fluid immersion, hydraulic fluid (when specified, see 3.1) 3/	3.41	4.10.23		X	
Resistance to soldering heat	3.46	4.10.28	X		
Insertion loss (+25°C, 100MHz)	3.27	4.10.9	X	X	X
Visual inspection	3.19	4.10.1	X	X	X

1/ Dielectric withstanding voltage and insulation resistance (+25°C) may be tested simultaneously.
2/ Capacitance should be measured prior to the application of voltage. The application of voltage will temporarily polarize the dielectric and depress the capacitance.
3/ With approval of the qualifying activity, the fluid immersion test may be omitted if the manufacturer can certify that the materials used in the filter connector are the same as qualified during qualification testing for the connector to which the filter connector is intended to mate. Deletion of the tests does not relieve the manufacturer from meeting this test requirement.

4.6 Conformance inspection.

4.6.1 Inspection of product for delivery. Inspection of product for delivery shall consist of group A and group B inspections.

4.6.2 Inspection lot.

4.6.2.1 B level inspection lot. An inspection lot shall consist of all filter connectors of a single PIN, produced under essentially the same conditions, and offered for inspection at one time.

4.6.2.2 T level inspection lot. An inspection lot for T level filter connectors shall be of one design. As a minimum requirement, the lot shall consist of all the filter connectors of a single PIN representing one design and processed as a single lot through all manufacturing steps on the same equipment, and identified with the same date and lot code designation. In addition, the lot shall conform to the following:

a. Planar capacitor arrays used in each filter connector of an inspection lot shall be traceable to one part number and one lot date code (LDC).

b. Each element (contacts, ferrites, insulators, etc.), except the planar array, used in the construction of the connector shall have completed a manufacturer's First Article Inspection and the results will become part of the data package. Only First Article complaint material can be used in the assembly of the connector.

c. All single process operations shall be done during one continuous run without changes in temperature, pressure, or other processing controls.

d. A lot identifying number shall be assigned at the time the lot is assembled. This identifying number (LDC) shall be maintained through acceptance.

e. The manufacturer shall maintain records on each lot date code. The manufacturer shall record when in-process controls and groups A and B inspections start and when they have been completed.

4.6.3 Group A inspection. Group A inspection shall consist of the inspections specified in table XI and shall be performed on 100 percent of the product supplied under this specification. Filter connectors failing the tests of group A shall be removed from the lot.

TABLE XI. Group A inspection.

Inspection	Requirement paragraph	Test method paragraph	Sampling procedure
Subgroup 1			
Dielectric withstanding voltage (at sea level) 1/	3.20	4.10.2	100%
Insulation resistance (+25°C) 1/	3.21	4.10.3	
Capacitance to ground 2/	3.22	4.10.4	
Dissipation factor	3.24	4.10.6	
Visual and mechanical inspection	3.19	4.10.1	
Subgroup 2			
Crosstalk capacitance	3.23	4.10.5	1

1/ Dielectric withstanding voltage and insulation resistance (+25°C) may be tested simultaneously.
2/ Capacitance should be measured prior to the application of voltage. The application of voltage will temporarily polarize the dielectric and depress the capacitance.

4.6.3.1 Subgroup 1. The tests of subgroup 1 shall be performed on 100 percent of the product supplied under this specification. Filter connectors failing the tests of subgroup 1 shall be removed from the lot. Lots having more than 5 percent total rejects shall not be furnished on the contract or purchase order.

4.6.3.2 Subgroup 2. The tests subgroup 2 shall be performed on a sample filter connector that has passed the tests of subgroup 1. The sample shall be randomly selected. There shall be no failures allowed.

4.6.4 Group B inspection. Group B inspection shall consist of the inspections specified in table XII in the order shown. The group B inspection for B level filter connectors shall be performed on sample units selected at random from each inspection lot that has passed the group A inspection. All T level parts that have passed the group A inspection shall be submitted to group B tests.

4.6.4.1 Subgroup 1.

4.6.4.1.1 B level. Samples subjected to the tests of subgroup 1 shall be selected in accordance with table XIII. In the event of a failure, the entire lot shall be inspected. Failures shall be removed from the lot. The lot shall be rejected when the number of failures in the lot is 10 percent or 1 filter connector, whichever is greater.

4.6.4.1.2 T level. Subgroup 1 tests shall be performed on 100 percent of the lot. Failures shall be removed from the lot. Lots shall be rejected when the number of failures in the lot is 5 percent or 1 filter connector, whichever is greater. Additionally, for T level filter connectors, there shall be no failures allowed in the last 48 hours of voltage conditioning.

4.6.4.1.3 Rejected lots (subgroup 1). The contractor may rework a rejected lot to correct the defects or screen out the defective units, and resubmit the lot to the tests of subgroup 1. A lot shall be resubmitted to the tests of subgroup 1 only once. The PDA for B level filter connectors shall be reduced from 10 percent to 5 percent. The PDA for T level filter connectors shall be reduced from 5 percent to 1 percent. Resubmitted lots shall be separate from new lots, and shall be clearly identified as reinspected lots. Any failures occurring in resubmitted lots consisting of fewer than 100 filter connectors shall be cause for rejection of the resubmitted lot.

4.6.4.2 Subgroup 2 (T level only). The number of sample units required by table XII shall be taken from each T level lot. In the event of a failure, the entire lot shall be inspected. No additional failures shall be allowed.

4.6.4.3 Subgroup 3. Samples subjected to subgroup 3 shall be selected in accordance with table XIII. In the event of a failure, the entire lot shall be inspected. No additional failures shall be allowed. The failure of one contact during the contact engagement and separation force test constitutes a failure of the filter connector.

4.6.4.4 Subgroup 4 (T level only). The number of sample units required by table XII shall be taken from each T level lot. No failures shall be allowed.

4.6.4.5 Subgroup 5 (T level only). The number of sample units required by table XII shall be taken from each T level lot. In the event of a failure, the entire lot shall be inspected. No additional failures shall be allowed.

TABLE XII Group B Inspection

Inspection	Requirement Paragraph	Test Method Paragraph	Sampling Procedure	
			B Level	T Level
Subgroup 1 Thermal Shock Voltage Conditioning Ground Contact Resistance (where applicable) Insertion Loss (+25°C, 100 MHz)	 3.25 3.26 3.38 3.27	 4.10.7 4.10.8 4.10.20 4.10.9	Table XIII	100%
Subgroup 2 Crosstalk Insertion Loss	3.28	4.10.10	N/A	1
Subgroup 3 Contact engagement and separating force (socket contacts only) Air leakage (hermetic connectors only) Operating forces (plug connectors only)	 3.32 3.33 3.34	 4.10.14 4.10.15 4.10.16	Table XIII	Table XIII
Subgroup 4 Dielectric characteristic Dielectric voltage breakdown 1/	 3.29 3.50	 4.10.11 4.10.32	N/A	2
Subgroup 5 Radiographic Real Time X ray	3.30	4.10.12	N/A	100%

1/ Dielectric voltage breakdown is a destructive test. Samples submitted to the dielectric voltage breakdown test shall not be supplied on the contract.

TABLE XIII. Sampling plan.

Lot size	Sample size
2 to 13	100%
14 to 150	13
151 to 280	20
281 to 500	29

4.7 Periodic group C inspection. Group C inspection shall consist of the inspections specified in table XV in the order shown. For B level and T level filter connectors, the periodic group C inspection shall be performed on sample units selected at random from each inspection lot that have passed group A and B inspection.

4.7.1 Sampling plan.

4.7.1.1 B level filter connectors. Every 2 years, 2 sample units of each military connector type (e.g. MIL-DTL-38999) shall be subjected to the tests of table XV. The sample units shall be the highest on the qualification hierarchy (filter type, capacitance, shell size, configuration density, and voltage rating) which was produced during the period. Except where the results of this inspection show noncompliance with the applicable requirements (see 4.7.4.1), delivery of products which have passed group A inspection shall not be delayed pending the results of this inspection.

4.7.1.2 T level filter connectors. Two sample units from each inspection lot shall be subjected to the tests of table XIV. T level parts shall not be shipped until the conclusion of the 1,000 hour life test.

4.7.2 Test routine. Group B samples shall be subjected to the tests of table XIV as follows:

a. One filter connector and its mating plug shall be subjected to the tests of group 1 of table XIV.

b. One filter connector and its mating plug shall be subjected to the tests of group 2 of table XIV.

TABLE XIV. Group C Periodic Inspection.

Inspection	Requirement paragraph	Test method paragraph	Test group	
			1	2
Visual inspection	3.19	4.10.1	X	X
Dielectric withstanding voltage (at sea level) 1/	3.20	4.10.2	X	X
Insulation resistance (+25°C) 1/	3.21	4.10.3	X	X
Capacitance to ground 2/	3.22	4.10.4	X	X
Crosstalk capacitance	3.23	4.10.5	X	X
Dissipation factor	3.24	4.10.6	X	X
Insertion loss (+25°C, 100MHz)	3.27	4.10.9	X	X
Crosstalk insertion loss	3.28	4.10.10	X	X
Dielectric characteristic	3.29	4.10.11	X	
Contact retention	3.31	4.10.13	X	X
Operating forces	3.34	4.10.16	X	X
Voltage spike (when specified, see 3.1)	3.35	4.10.17	X	X
Lightning (when specified, see 3.1)	3.36	4.10.18	X	X
Capacitance (at temperature extremes)	3.22	4.10.4	X	X
Dielectric withstanding voltage (at altitude)	3.20	4.10.2	X	X
Insulation resistance (+125°C)	3.21	4.10.3	X	X
Insertion loss (at elevated ambient temperature)	3.27	4.10.9	X	X
Contact resistance	3.37	4.10.19		X
Ground contact resistance (when specified, see 3.1)	3.38	4.10.20		X
Thermal shock	3.25	4.10.7	X	X
Water immersion	3.39	4.10.21	X	X
Life (at elevated ambient temperature)	3.48	4.10.30		X
Random Vibration	3.43	4.10.25	X	
Insert retention	3.40	4.10.22		X
Contact retention	3.31	4.10.13		X
Operating forces	3.34	4.10.16		X
Insertion loss (+25°C, 100MHz)	3.27	4.10.9	X	X
Visual inspection	3.19	4.10.1	X	X

1/ Dielectric withstanding voltage and insulation resistance (+25°C) may be tested simultaneously.
2/ Capacitance should be measured prior to the application of voltage. The application of voltage will temporarily polarize the dielectric and depress the capacitance.

4.7.3 Disposition of sample units. Sample units that have been subjected to the periodic group C inspection shall not be delivered on the contract or purchase order. The samples shall be maintained with relative data and traceability for not less than 5 years.

4.7.4 Failures.

4.7.4.1 B level filter connectors. If a sample fails to pass the periodic group C inspection, the manufacturer shall immediately notify the qualifying activity and the cognizant inspection activity of such failure and take corrective action on the materials or processes, or both, as warranted, and on all units of product which can be corrected and which were manufactured under essentially the same conditions, with essentially the same materials, processes, etc., and which are considered subject to the same failure. Acceptance and shipment of the product shall be discontinued until corrective action acceptable to the qualifying activity has been taken. After the corrective action has been taken, additional samples shall be subjected to the qualification tests of table X (all inspections, or the inspection which the

original sample failed, at the option of the qualifying activity). Group A inspection may be reinstituted; however, final acceptance and shipment shall be withheld until the inspections of table X have shown that the corrective action was successful. In the event of failure after reinspection, information concerning the failure shall be furnished to the cognizant inspection activity and the qualifying activity.

4.7.4.2 T level filter connectors. If an inspection lot fails to pass the periodic group C inspection, the inspection lot shall not be delivered on the contract or purchase order. The manufacturer shall immediately notify the qualifying activity and cognizant inspection activity of the failure and take corrective action on the materials or processes, or both as warranted. A failure analysis (see 4.7.4.2.1) shall be performed on the failing product and forwarded to the qualifying activity. A copy of the results shall be maintained by the manufacturer. If three successive lots of filter connectors fail conformance testing (groups A and B), the qualifying activity shall be notified within 96 hours and the qualifying activity, at its discretion, may remove the failing product from the qualified manufacturers list.

4.7.4.2.1 Failure analysis. If any of the sample units subjected to the periodic group C inspection fail during testing, a detailed failure analysis shall be conducted to establish the cause of failure and the corrective actions that would eliminate subsequent failures of a similar type. A failure is categorized as lot oriented if its occurrence is apparently related to an identified lot or lots. A failure is categorized as not lot oriented if its occurrence is random and it cannot be related to a specific lot or lots. Each failure is further identified as screenable or not screenable from the completed production items. If the failure analysis shows that the failure mechanism is screenable, the entire failed lot may be screened and the group C test in which the failure occurred shall be repeated. If a failure occurs during the second group C test, the entire production lot shall be rejected. If the failure mechanism is screenable, all prior and subsequent production lots that may contain the identified failure mechanism shall also be screened. Except as may be stated otherwise in the detailed requirements for the specific part type (see 3.1), if the failure mechanism is lot oriented and not screenable, all production lots that may contain the identified failure mechanism shall be rejected unless other disposition is directed by the contracting officer and qualifying activity.

4.8 Certification. The manufacturer shall certify with each order of parts, that the applicable conformance tests were successfully completed.

4.9 Changes in design: Design changes in material or substance shall not be made without approval from the qualifying activity and completion of the tests of table A-I.

4.10 Methods of inspection.

4.10.1 Visual inspection.

4.10.1.1 Visual and mechanical inspection. Filter connectors shall be examined to verify that the materials, design, construction, physical dimensions, marking, and workmanship are in accordance with the applicable requirements (see 3.1, 3.16, 3.51, and 3.52).

4.10.1.2 Visual inspection (T level only) (see 3.19). Each element and subassembly shall be visually inspected under 10-power magnification. Elements and subassemblies exhibiting any of the anomalies listed below shall be removed from the lot and identified as rejects.

a. Pre-cap planar array capacitors. In accordance with appendix B. The planar capacitor array, prior to installation into the connector shell, shall be inspected. The arrangement, contacts, polarization, seals, and contact alignment shall be as specified (see 3.1).

b. Connectors. The connectors, accessories, and piece parts shall be visually and mechanically examined to ensure conformance with the applicable military specification covering the connector to which the filter connector is intended to mate (see 3.1). The manufacturer may use in-process controls to satisfy these requirements.

c. Contacts. When visually inspected under 10-power magnification, the engaging end of the contacts shall be free from burrs or roughness. The contacts shall not have corroded or black solder pots which would be detrimental to the solderability of the contacts when applicable. The contacts shall not be bent, misaligned, or otherwise damaged.

d. Plating. When visually inspected under 10-power magnification, all plating shall have a smooth and fine grained surface consistent with the surface of the base metal. All plating shall be free from blisters, cracks, scale, pits, nodules, porosity, underplate, excessive edge buildup or other defects which, due to their degree, nature or extent, detrimentally affect the stability of the plating for its intended use.

e. Insulators. When visually inspected under 10-power magnification, insulators shall be free from damage such as chips, cracks, voids or inclusions.

4.10.2 Dielectric withstanding voltage (see 3.20)

4.10.2.1 Dielectric withstanding voltage (at sea level). Filter connectors shall be tested in accordance with EIA-364-20. The following details and exceptions shall apply:

a. Test voltage: Unless otherwise specified (see 3.1), 2.5 x rated voltage, 500 vdc.

b. Duration of application of test voltage: 5 to 10 seconds.

c. Points of application of test voltage: Method C. The test voltage shall be applied between each contact in turn, and all other contacts and shell connected together.

d. Charging current: 20 mA maximum.

e. The sensitivity of the breakdown test equipment shall be sufficient to indicate breakdown when at least 0.5 mA of leakage current flows through the contact under test.

4.10.2.2 Dielectric withstanding voltage (at altitude). Filter connectors shall be tested in accordance with EIA-364-20, test condition IV. Unless otherwise specified (see 3.1), after 30 minutes at simulated altitude, the filter connectors shall be tested as specified in 4.10.2.1 with a test potential of 350 Vdc. Only the engaging face of the connectors shall be subjected to altitude. The rear faces shall be suitably protected. Unless otherwise specified (see 3.1), the test shall be repeated at a pressure of 13.2 millimeters of mercury (90,000 feet) with a test potential of 250 Vdc.

4.10.3 Insulation resistance (see 3.21).

4.10.3.1 Insulation resistance (+25°C). Filter connectors shall be tested in accordance with EIA-364-21. The following details and exceptions shall apply:

a. Ambient temperature: +25°C ± 3°C.

b. Test voltage: 200 Vdc, applied for 2 minutes maximum.

c. Relative humidity: 20 to 50 percent.

d. Points of measurement: Between each contact in turn, and all other contacts and shell connected together.

e. The test may be terminated once the minimum insulation resistance level has been reached. If performing with the DWV test (see 4.10.2) and the minimum insulation resistance level has been reached; the test voltage shall be applied for the minimum of 5 seconds before the test may be terminated.

4.10.3.2 Insulation resistance (+125°C). Filter connectors shall be tested in accordance with EIA-364-21. The following details and exceptions shall apply:

a. Test temperature: +125°C ± 3°C.

b. Test voltage: 200 Vdc.

c. Filter connectors shall be stabilized at +125°C ± 3°C with voltage applied.

d. Points of measurement: Between each contact in turn, and all other contacts and shell connected together.

e. The test may be terminated once the minimum insulation resistance level has been reached. If performing with the DWV test (see 4.10.2) and the minimum insulation resistance level has been reached; the test voltage shall be applied for the minimum of 5 seconds before the test may be terminated.

4.10.4 Capacitance to ground (see 3.22). Capacitance shall be tested in accordance with method 305 of MIL-STD-202. The following details and exceptions shall apply:

a. Test frequency: Unless otherwise specified (see 3.1), 1 kHz ± 100 Hz3.1.

b. Voltage: A root-mean-square (rms) potential of 1 volt maximum.

c. Measurement accuracy: ± 2 percent.

d. Points of measurement: Between each filtered contact in turn, and the filter connector shell.

4.10.5 Crosstalk capacitance (see 3.23). The crosstalk capacitance shall be measured in accordance with 4.10.4. The following details and exceptions shall apply:

a. Using a Kelvin 4-wire configuration, connect one set of paired leads (high) to one contact in the filter connector and the other set of paired leads (low) to an adjacent contact. Attach the ground lead to the filter connector shell.

b. Unless otherwise specified (see 3.1), no more than 3 adjacent pairs of the same capacitance value need to be measured3.1.

4.10.6 Dissipation factor (see 3.24). The dissipation factor shall be measured as part of the capacitance measurement specified in 4.10.4.

4.10.7 Thermal shock (see 3.25). Filter connectors shall be tested in accordance with EIA-364-32, method A.

a. Test condition: Test condition I, except step 3 temperature shall be +125°C + 3°C, -0°C.

b. Number of cycles:

(1) Qualification: B level: 5 cycles.
T level: 100 cycles.

(2) Group B: B level: 5 cycles.
T level: 20 cycles.

(3) Group C: B level: 5 cycles
T level: 100 cycles

4.10.8 Voltage conditioning (see 3.26). Filter connectors shall be tested in accordance with method 108 of MIL-STD-202. The following details and exceptions shall apply:

a. Test temperature and tolerance: +125°C ± 3°C.

b. Test voltage: 2.5 x rated voltage.

c. Test duration:

(1) B level: 48 -0, + 4 hours.

(2) T level: 96 -0, + 4 hours.

d. Mounting: Filter connector receptacles shall be mounted to a "T" plate and mated to a plug connector which has been wired so that all filtered and non filtered contacts, excluding ground contacts, are connected in parallel. The test voltage shall be applied between the paralleled contacts and the connector shell.

e. Initial measurements: Insulation resistance (+25°C) as specified in 3.21.

f. With the voltage applied, the oven temperature shall be increased until the test temperature is reached. Failures shall be determined by +125°C IR failures. The insulation resistance (+125°C) shall be measured after the first 8 hours and then every 16 hours until the end of the test (see 6.10). This data shall be recorded for comparison purposes to determine failures. Any filter connector whose IR has decreased by an order of magnitude or more during the test shall be considered a failure and marked for removal from the lot (see 4.10.8h).

g. Measurement after test: Prior to the removal of the test voltage, filter connectors shall be allowed to stabilize at room temperature (+25°C). After stabilization at room temperature, the insulation resistance shall be measured with the contacts connected in parallel (see 4.10.8d) in accordance with 4.10.3.2. A filter connector whose IR has decreased by at least an order of magnitude or more as compared to the initial measurements (see 4.10.8e) shall be considered a failure and removed from the lot.

Upon completion of the insulation resistance measurement, the connectors shall be unmated and the insulation resistance, dielectric withstanding voltage, capacitance to ground, and dissipation factor shall be measured in accordance with 4.10.3, 4.10.2, 4.10.4, and 4.10.6. In addition, filter connectors shall be visually inspected in accordance with 4.10.1.

Note: If the minimum capacitance to ground requirement is not met, the filter connector may be reheated to +125°C for a minimum of 1 hour. The capacitance to ground measurement, in accordance with 4.10.4, shall be repeated after the filter connector has stabilized at room temperature (+25°C).

All measurements shall be conducted within 8 hours after completion of voltage conditioning.

h. Failures during the temperature test (see 4.10.8f) may be tested for dielectric withstanding voltage and insulation resistance in accordance with 4.10.2 and 4.10.3 respectively. If the filter connector meets the requirements for DWV and IR as specified in 3.20 and 3.21, the voltage conditioning test may be repeated. A failure during this second test shall be cause for rejection.

4.10.9 Insertion loss (see 3.27).

4.10.9.1 Insertion loss (+25°C). Insertion loss shall be measured in accordance with MIL-STD-220. The following details and exceptions shall apply:

a. Number of contacts to be tested:

(1) Qualification: All filtered contacts on one sample. 5 (filtered) on the remaining samples. For filter connectors containing multiple capacitance values (see 3.1), at least 1 contact of each capacitance value shall be tested.

(2) Groups B and C: 5 (filtered). For filter connectors containing multiple capacitance values (see 3.1), at least 1 contact of each capacitance value shall be tested.

b. Test frequency: 100 MHz.

4.10.9.2 Insertion loss (+125°C). Insertion loss shall be measured as specified in 4.10.9.1 except the filter connectors shall be exposed to +125°C for thirty minutes prior to the test and kept at +125°C during the test.

4.10.9.3 Insertion loss (-55°C). Insertion loss shall be measured using the same conditions as 4.10.9.1 except the temperature shall be -55°C. The same contacts measured at +125°C shall be tested (see 4.10.9.2).

4.10.10 Crosstalk insertion loss (see 3.28). Crosstalk insertion loss shall be measured in accordance with MIL-STD-220. The following details and exception shall apply:

a. Number of contacts to be tested:

(1) Qualification: All filtered contacts on one sample. 2 separate pairs of adjacent filtered contacts on the remaining samples.

(2) Groups B and C: 2 separate pairs of adjacent filtered contacts.

b. Test frequency: 100 MHz.

c. The test signal, source output, shall be applied to a filtered contact and measured, source return, on an adjacent filtered contact of the same type as the filtered contact to which the test signal is applied.

4.10.11 Dielectric characteristic (see 3.29). The temperature of each filter connector shall be varied as specified in table XV. Capacitance measurements shall be made at the frequency and voltage specified in 4.4.2. The dc voltage specified in table XV shall be maintained on the filter connector during step E to step G inclusive.

TABLE XV. Voltage-temperature limit cycle.

Step	Voltage, dc	Temperature °C
A	None	+25 ±2
B	None	-55 ±2
C (ref)	None	+25 ±2
D	None	+125 ±2
E	Rated	+125 ±2
F	Rated	+25 ±2
G	Rated	-55 ±2

4.10.12 Real time radiographic inspection (T level only) (see 3.30). Filter connectors shall be radiographed in accordance with appendix C. The following details shall apply:

a. Views: The radiographic examination of a filter connector shall be observed in real time in 3 axes (x, y, and z). When inadequate coverage is provided, additional views (rotation and tilt) shall be performed as deemed necessary to satisfy the x-ray criteria (see 3.1 and 3.30).

b. Summary data of inspection results: A summary of the results of real time radiographic inspection (number of parts inspected, number accepted, number rejected) shall be included on the group A inspection report furnished with each shipment of filter connectors.

c. Retention of images: Radiograph images and test reports shall be maintained by the manufacturer for a minimum period of 10 years.

d. Magnification: A magnification of 10X minimum shall be used for real time radiographic inspection.

4.10.13 Contact retention (see 3.31). Axial loads shall be applied to the filter connector contacts. The filter receptacles shall have all contacts in place during the test. A load shall be applied at a rate of approximately one pound per second until the specified load (see table XVI) has been reached. The load shall be applied to the mating ends of the contacts only. The specified loads (see table XVI) shall be maintained for a minimum of 5 seconds and then removed.

a. Number of contacts to be tested: A minimum of 4 filtered contacts or 20 percent of the filtered contacts, whichever is greater.

b. Measurement after test: The axial displacement of the contacts shall be measured.

TABLE XVI. Contact retention loads.

Contact size	Load (lbs)
22	10
20	15
16	25

4.10.14 Contact engagement and separating force (socket contacts only) (see 3.32). Filter connectors shall be tested in accordance with the military specification covering the connector to which it is intended to mate (see 3.1). Upon completion of the contact engagement and separating force test, the dielectric withstanding voltage, insulation resistance, capacitance to ground, and dissipation factor shall be measured as specified in 4.10.2, 4.10.3, 4.10.4, and 4.10.6 respectively. In addition, filter connectors shall be visually inspected as specified in 4.10.1.

4.10.15 Air leakage (hermetic connectors only) (see 3.33). Filter connectors shall be tested in accordance with the military specification covering the connector to which it is intended to mate (see 3.1). Upon completion of the air leakage test, the dielectric withstanding voltage, insulation resistance, capacitance to ground, and dissipation factor shall be measured as specified in 4.10.2, 4.10.3, 4.10.4, and 4.10.6 respectively. In addition, filter connectors shall be visually inspected as specified in 4.10.1.

4.10.16 Operating forces (see 3.34). Filter connectors shall be mated with proper plugs and tested in accordance with the military specification covering the connector to which it is intended to mate (see 3.1). The torque applied to the coupling rings, in order to accomplish full coupling and uncoupling, shall be measured. Upon completion of the operating forces test, the dielectric withstanding voltage, insulation resistance, capacitance to ground, and dissipation factor shall be measured as specified in 4.10.2, 4.10.3, 4.10.4, and 4.10.6 respectively. In addition, filter connectors shall be visually inspected as specified in 4.10.1.

4.10.17 Voltage spike (see 3.35). Filter connectors shall be exposed to a $600V_{(peak)}$ double exponential pulse of both polarities as described by the following equation:

$$E = \pm A(e^{-\alpha t} - e^{\beta t}) \qquad \text{where: } \alpha = 1.4 \times 10^4,\ \beta = 3.6 \times 10^6,\ A = 1.02 \times 600$$

The source impedance shall be 100 ohms. A surge generator with an 8 X 20µS plug-in shall be used to generate the 600V spike. Upon completion of the voltage spike test, the dielectric withstanding voltage, insulation resistance, capacitance to ground, and dissipation factor shall be measured as specified in 4.10.2, 4.10.3, 4.10.4, and 4.10.6 respectively. In addition, filter connectors shall be visually inspected as specified in 4.10.1.

4.10.18 Lightning (see 3.36). Filter connectors shall be tested in accordance with RTCA DO 160, section 22. The following details shall apply:

a. Number of contacts to be tested: 2 sets of 10 filtered contacts or all filtered contacts divided into 2 sets, whichever is greater. For filtered connectors containing multiple capacitance values (see 3.1), each capacitance value shall be represented among the contacts tested.

b. Procedure: Three types of pulses (see 4.10.18c) shall be applied between the filter connector contacts under test in turn and all other contacts commoned with the filter connector shell. The first two pulses (see 4.10.18c(1) and 4.10.18c(2)) may be applied to the same set of filtered contacts. The third pulse (see 4.10.18c(3)) shall be applied to a separate set of filtered contacts in the same filter connector.

c. Pulses:

(1) Exponentially decaying ringing sine at 1MHz. A total of 10 pulses of waveform 3 level 4 shall be applied.

(2) Double exponential pulse with positive and negative polarity per waveform 4 level 4. A total of 10 pulses in each polarity shall be applied to the contacts under test. The total will be 20 pulses.

(3) $1600V_{(peak)}$ double exponential with a short circuit current of 320 amps. The pulse waveform shall be in accordance with figure 22-3 of RTCA DO 160 except that T2 shall be 2µSec. The pulses shall be spaced 1 second apart. The generator source impedance shall be 5 ohms. A total of 10 pulses in each polarity shall be applied to the contacts under test. The total will be 20 pulses.

d. Measurements after test: Upon completion of the lightning test, the dielectric withstanding voltage, insulation resistance, capacitance to ground, and dissipation factor shall be measured as specified in 4.10.2, 4.10.3, 4.10.4, and 4.10.6 respectively. In addition, filter connectors shall be visually inspected as specified in 4.10.1.

4.10.19 Contact resistance (see 3.37). Filter connectors shall be tested in accordance with EIA-364-06. The following details and exceptions shall apply:

a. Number of contacts to be tested: A minimum of four filtered contacts or 20 percent of the filtered contacts, whichever is greater.

b. Test current: As specified in table IX.

c. The contact resistance for filter connectors with PCB contacts shall be measured through three inches of wire from a mating connector and a Kelvin clip attached to the appropriate PCB contact tail.

4.10.20 Ground contact resistance (see 3.38). Ground contact resistance shall be measured between each ground contact (see 3.1) in turn, and the flange for receptacles or the end of the shell for an adapter or plug filter connector by using a pair of Kelvin clips. One clip shall be connected to the barrel of the appropriate contact, pin or socket that will mate to the contact in the mating interface of the filter connector. This will be mated to the contact to be tested and the second Kelvin clip will be connected to the connector shell at the flange or end of shell. The source will be a constant current/voltage source set at 1 volt open circuit and the current at 100 mA. The voltage drop shall be measured using a high impedance volt meter.

4.10.21 Water immersion (not applicable to adapter filter connectors) (see 3.39). Filter receptacles shall be immersed unmated into water. The following details shall apply:

a. The water should be treated with a wetting agent such as Kodak Photo-Flow or equivalent.

b. Water temperature: +135°F to +145°F

c. Duration of immersion: 20 to 40 seconds.

d. After removal from the water, the filter connector shall have free standing water removed by blowing with compressed air at 5 to 10 psi.

e. Measurements after test: Upon completion of the water immersion test, the dielectric withstanding voltage, insulation resistance, capacitance to ground, and dissipation factor shall be measured as specified in 4.10.2, 4.10.3, 4.10.4, and 4.10.6 respectively. In addition, filter connectors shall be visually inspected as specified in 4.10.1.

f. All filter connectors subjected to the water immersion test shall be vacuum dried at a maximum of 10 Torr at +180°F minimum for 8 hours before resuming further testing. After vacuum baking, the dielectric withstanding voltage and insulation resistance shall be measured as specified in 4.10.2 and 4.10.3 respectively.

4.10.22 Insert retention (see 3.40). Inserts, less removable grommets or any insert supporting accessories, shall be subjected to an axial load . Loading shall be accomplished by applying air pressure or equivalent load to the mating face. The pressure shall be increased gradually at a rate of approximately 10 psi/second until the specified pressure is reached (see 3.1). The insert shall retain its normal position in the shell for at least 5 seconds at the maximum specified pressure (see 3.1).

4.10.23 Fluid immersion (see 3.41). Unmated filter connectors and their counterpart plugs shall be fully immersed in the specified fluid. The following details shall apply:

a. Fluids:

(1) Hydraulic fluid conforming to MIL-PRF-5606.

(2) Lubricating oil conforming to MIL-PRF-7808.

b. Duration of immersion: 20 hours.

c. After removal from the fluid, each filter connector and their counterpart plugs shall remain for 1 hour in free air at room conditions.

d. Measurements after test: When mating is required, tests shall be performed on the filter connectors mated with the counterpart plugs that had been immersed simultaneously. Upon completion of the fluid immersion test, filter connectors shall be tested for coupling torque as specified in 4.10.31. Upon completion of the coupling torque test, the capacitance to ground, and dissipation factor shall be measured as specified in 4.10.4, and 4.10.6 respectively. In addition, filter connectors shall be visually inspected as specified in 4.10.1.

4.10.24 Shock (see 3.42). Filter connectors shall be tested in accordance with the military specification covering the connector to which it is intended to mate (see 3.1), except the filter connector shall be monitored for discontinuities during the test (see 6.11). Upon completion of the shock test, the dielectric withstanding voltage, insulation resistance, capacitance to ground, and dissipation factor shall be measured as specified in 4.10.2, 4.10.3, 4.10.4, and 4.10.6 respectively. In addition, filter connectors shall be visually inspected as specified in 4.10.1.

4.10.25 Random vibration (see 3.43). Wired and mated filter connectors shall be tested in accordance with EIA-364-28, except the filter connector shall be monitored for discontinuities during the test in accordance with 6.11. The following details and exceptions shall apply:

a. Test condition: VI.

b. Test condition letter: J.

c. Duration and temperature: 8 hours in each of 2 axes at +25°C, 4 hours in each of 2 axes at -55°C, and 4 hours in each of 2 axes at +125°C.

d. Measurements after test: Upon completion of the vibration test at each temperature, the dielectric withstanding voltage, insulation resistance, capacitance to ground, and dissipation factor shall be measured as specified in 4.10.2, 4.10.3, 4.10.4, and 4.10.6 respectively. In addition, filter connectors shall be visually inspected as specified in 4.10.1.

4.10.26 Humidity (see 3.44). Filter connectors shall be tested in accordance with the military specification covering the connector to which it is intended to mate (see 3.1), except the rear of the filter connector shall be protected from the ambient of the chamber. Upon completion of the humidity test, the dielectric withstanding voltage, insulation resistance, capacitance to ground, and dissipation factor shall be measured as specified in 4.10.2, 4.10.3, 4.10.4, and 4.10.6 respectively. In addition, filter connectors shall be visually inspected as specified in 4.10.1.

4.10.27 Humidity, steady-state, low voltage (T level only) (see 3.45). Filter connectors shall be tested in accordance with EIA-364-31, method II. The following details and exceptions shall apply:

Note: At no time shall voltage greater than 1.55 volts be applied to any filtered contact under test.

a. Test condition: B (240 hours).

b. Initial measurements: Capacitance to ground and dissipation factor shall be measured as specified in 4.10.4 and 4.10.6.

c. Tests: Filter connectors shall be subjected to an environment of +85°C with 85 percent relative humidity. Cycling shall not be performed. The rear of the filter connector shall be protected from the ambient of the chamber. A dc potential of 1.3 ± 0.25 volts shall be applied continuously between all filtered and non-filtered contacts tied together, excluding ground contacts, the shell.

d. Measurements after test: Upon completion of the test, the filter connectors shall be removed from the chamber and allowed 3 hours, 30 minutes, ±30 minutes for drying and stabilization at +25°C before measuring insulation resistance (through a 100 kΩ resistor at 1.3 ± 0.25 volts), capacitance to ground, and dissipation factor as specified in 4.10.2, 4.10.3, 4.10.4, and 4.10.6 respectively. In addition, filter connectors shall be visually inspected as specified in 4.10.1.

4.10.28 Resistance to solder heat (if applicable) (see 3.46). Filter connectors with solderable, nonremovable contacts shall be tested in accordance with method 210 of MIL-STD-202. The following details and exceptions shall apply:

Note: The resistance to soldering heat requirement may be satisfied during shock and random vibration testing (see 6.11).

a. Test condition:

(1) Printed circuit board terminations: Test condition C.

(2) Solder cup terminations: Test condition A.

b. Number of contacts to be tested: 7 filtered contacts or 20 percent of the filtered contacts, whichever is greater.

c. The test contacts shall be fluxed.

d. Measurements after test: Upon completion of the resistance to soldering heat test, the dielectric withstanding voltage, insulation resistance, capacitance to ground, and dissipation factor shall be measured as specified in 4.10.2, 4.10.3, 4.10.4, and 4.10.6 respectively. In addition, filter connectors shall be visually inspected as specified in 4.10.1. The visual and mechanical inspection of 4.10.1.1 shall be at 10X.

4.10.29 Salt spray (corrosion) (see 3.47). Filter connectors shall be tested in accordance with the military specification covering the finish of the connector to which it is intended to mate (see 3.1).

4.10.30 Life (see 3.48). Filter connectors shall be tested in accordance with method 108 of MIL-STD-202. The following details and exceptions shall apply:

a. Test temperature and tolerance: +125°C ± 3°C.

b. Test condition: D (1,000 hours).

c. Mounting: Filter connector receptacles shall be mounted to a "T" plate and mated to a plug connector which has been wired so that all filtered and non filtered contacts, excluding ground contacts, are connected in parallel. Rated voltage shall be applied between the paralleled contacts and the connector shell.

d. Initial measurements: Insulation resistance (+25°C) as specified in 3.21.

e. With the voltage applied, the oven temperature shall be increased until the test temperature is reached. Failures shall be determined by +125°C IR failures. The insulation resistance (+125°C) shall be measured after the first 8 hours and then every 16 hours until the end of the test (see 6.10). This data shall be recorded for comparison purposes to determine failures. Any filter connector whose IR has decreased by an order of magnitude or more during the test shall be considered a failure and marked for removal from the lot (see 4.10.30g).

f. Measurement after test: Prior to the removal of the test voltage, filter connectors shall be allowed to stabilize at room temperature (+25°C). After stabilization at room temperature, the insulation resistance shall be measured with the contacts connected in parallel (see 4.10.30c) in accordance with 4.10.3.2. A filter connector whose IR has decreased by at least an order of magnitude or more as compared to the initial measurements (see 4.10.30d) shall be considered a failure and removed from the lot.

Upon completion of the insulation resistance measurement, the connectors shall be unmated and the insulation resistance, dielectric withstanding voltage, capacitance to ground, and dissipation factor shall be measured in accordance with 4.10.3, 4.10.2, 4.10.4, and 4.10.6. In addition, filter connectors shall be visually inspected in accordance with 4.10.1.

Note: If the minimum capacitance to ground requirement is not met, the filter connector may be reheated to +125°C for a minimum of 1 hour. The capacitance to ground measurement, in accordance with 4.10.4, shall be repeated after the filter connector has stabilized at room temperature (+25°C).

All measurements shall be conducted within 8 hours after completion of voltage conditioning.

g. Failures during the temperature test (see 4.10.30e) may be tested for dielectric withstanding voltage and insulation resistance in accordance with 4.10.2 and 4.10.3 respectively. If the filter connector meets the requirements for DWV and IR as specified in 3.20 and 3.21, the voltage conditioning test may be repeated. A failure during this second test shall be cause for rejection.

4.10.31 Coupling torque (see 3.49). Filter connectors shall be tested in accordance with the military specification covering the connector to which it is intended to mate (see 3.1).

4.10.32 Dielectric voltage breakdown (see 3.50). Filter connectors shall be placed in an oil (or other suitable dielectric fluid) bath and connected in series with an instrument to measure current in the mA range. A dc voltage shall be gradually applied at no greater than 50 volts per second until failure occurs. The dielectric voltage breakdown test shall be applied to 3 contacts, minimum; an external location, an internal location, and a location on the opposite side of the array. The dielectric voltage breakdown voltages shall be recorded for the samples and the mean and standard deviation calculated.

5. PACKAGING

5.1 Packaging. For acquisition purposes, the packaging requirements shall be as specified in the contract or order (see 6.2). When packaging of material is to be performed by DoD or in-house contractor personnel, these personnel need to contact the responsible packaging activity to ascertain packaging requirements. Packaging requirements are maintained by the Inventory Control Point's packaging activities within the Military Service or Defense Agency, or within the military service's system command. Packaging data retrieval is available from the managing Military Department's or Defense Agency's automated packaging files, CD-ROM products, or by contacting the responsible packaging activity.

6. NOTES

(This section contains information of a general or explanatory nature that may be helpful, but is not mandatory.)

6.1 Intended use. Filter connectors described herein are intended for use in the reduction of broadband radio frequency interference. Filter connectors covered by this specification are unique due to the necessity to operate satisfactorily in high reliability military systems under separate or a combination of demanding environmental conditions including high frequency vibration, high levels of shock, moisture and humidity, and temperature extremes.

6.2 Acquisition requirements. Acquisition documents must specify the following:

a. Title, number, and date of this specification, the applicable specification sheet, and the complete PIN (see 1.2.1 and 3.1) and lead material if other than that specified (see 3.1).

b. Packaging requirements.

6.3 Qualification. With respect to products requiring qualification, awards will be made only for products which are, at the time of award of contract, qualified for inclusion in Qualified Manufactures List whether or not such products have actually been so listed by that date. The attention of the contractors is called to these requirements, and manufacturers are urged to arrange to have the products that they propose to offer to the Federal Government tested for qualification in order that they may be eligible to be awarded contracts or orders for the products covered by this specification. Information pertaining to qualification of products may be obtained from the Defense Supply Center, Columbus, ATTN: DSCC-VQP, PO Box 3990, Columbus, OH 43218-3990, or by e-mail to vqp.chief@dla.mil. An online listing of products qualified to this specification may be found in the Qualified Products Database (QPD) at https://assist.daps.dla.mil.

6.4 Copies of SD 6. Copies of SD 6, "Provisions Governing Qualification" are available online at https://assist.daps.dla.mil/quicksearch/ or https://assist.daps.dla.mil or from the Standardization Document Order Desk, 700 Robbins Avenue, Building 4D, Philadelphia, PA 19111-5094.

6.5 Tin whisker growth. The use of alloys with a tin content greater than 97 percent, by mass, may exhibit tin whisker growth problems after manufacture. Tin whiskers may occur anytime from a day to years after manufacture and can develop under typical operating conditions, on products that use such materials. Conformal coatings applied over top of a whisker-prone surface will not prevent the formation of tin whiskers. Alloys of 3 percent lead, by mass, have shown to inhibit the growth of tin whiskers. For additional information on this matter, refer to ASTM-B545 (Standard Specification for Electrodeposited Coatings of Tin).

6.6 Subject term (key word) listing.

Capacitor
Ferrite bead
Insertion loss
Planar capacitor array

6.7. Environmentally preferable material. Environmentally preferable materials should be used to the maximum extent possible to meet the requirements of this specification. As of the dating of this document, the U.S. Environmentally Protection Agency (EPA) is focusing efforts on reducing 31 priority chemicals. The list of chemicals is available on their website at http://www.epa.gov/epaoswer/hazwaste/minimize/chemlist.htm. Further information is available at the following EPA site: http://www.epa.gov/epaoswer/hazwaste/minimize/. Included in the EPA list of 31 priority chemicals are cadmium, lead, and mercury. Use of the materials on the list should be minimized or eliminated unless needed to meet the requirements specified herein (see Section 3).

6.8 High voltage applications. For high voltage applications, the ferrites need to be paraline coated to control flash over between ferrites. In some cases, the cavity containing the ferrites needs to be sealed, eliminating all voids. When a solderless design is used, the spring ends on the surface of the planar capacitor array need to be conformal coated to prevent edge flashover.

6.9 High vibration applications. In very high vibration applications, the ferrites need to be restrained to prevent rotation that can cause solder fragments to be loosened in the ferrite cavity, causing shorts.

6.10 Guidance for voltage conditioning and life testing (see 4.10.8 and 4.10.30). Voltage conditioning and life tests both require the monitoring of insulation resistance during the time at temperature. The filter connector is to be mated to an appropriate connector that has been wired so that all filtered and non filtered contacts, excluding ground contacts, are connected in parallel. The test voltage is applied between the parallel contacts and the shell of the connector. The resultant insulation resistance will be the reciprocal sum of the insulation resistance of the individual contacts placed in parallel as determined by the following equation:

$$R_P = \frac{1}{\frac{1}{R_1} + \frac{1}{R_2} + \cdots + \frac{1}{R_N}}$$

Where: N = Number of contacts in parallel.

If each individual contact had an equal insulation resistance, the parallel insulation resistance could be determined by the following equation:

$$R_P = \frac{R_C}{N}$$

Where: N = Number of contacts in parallel.
R_c = Insulation resistance of each individual contact.

For instance: If the insulation resistance of each individual contact in a 50 pin connector was 10 Gohms, the parallel insulation resistance would be about 200 Mohms. In a practical situation, the actual level is quite a bit higher because stabilization is being reached; whereas, the calculation is based on minimum limits.

The purpose of monitoring the insulation resistance during voltage conditioning and life testing is to find the contact(s) within a filter connector that have a defect that will cause the leakage current on that pin to increase. Since the contacts are in parallel, a circuit that has a leakage current higher than the others will cause the parallel insulation resistance measurement to change dramatically. Depending on the magnitude of the leakage, the measured insulation resistance of the paralleled pins will shift significantly out of the range of the balance of the filter connectors being monitored. For example: If the IR at temperature for the individual contacts of a 50 pin connector was 1000 Mohms, the total parallel IR would be 20 Mohms. If the IR of one pin shifted to 10 Mohms, the parallel IR would decrease to 6.7 Mohms. When degradation is taking place, it is not uncommon for the IR of an individual contact to drop 2 or even 3 decades. If more pins shifted, the 6.7 Mohms would drop even further and then begin to rise, but by very small increments.

The IR limit for voltage conditioning and life testing will have to be determined by the properties of the filter connectors under test. The test voltage will be applied and then the temperature will be increased. The IR will be monitored during this time and a normal base line IR will be formed 10 to 15 minutes after the oven stabilizes. All parts should be at about the same value. Filter connectors that contain defects will suddenly shift within the next 4 to 8 hours. The shift will be significant as noted above. The IR needs to be monitored after the first 8 hours every 16 hours until the end of the test.

6.11 Guidance for discontinuity monitoring during shock and random vibration testing (see 4.10.24 and 4.10.25). Discontinuity monitoring during shock and random vibration testing will be accomplished by wiring the filter connector and the mating plug so that a complete series circuit will be created when mated. A solder cup connector will have wires soldered to each solder cup in the any sequence desired. A PCB connector will be soldered to a PCB with the traces laid out to create a series circuit when the filter connector is mated to the mating plug. The wires attached to a solder cup connector will be at least 3 feet long so that they can be secured to a non vibrating surface adjacent to the shaker or shock table. The post electrical tests may be accomplished with the connector series wired.

Upon completion of the tests the filter connectors will be unsoldered and tested per the normal test procedure. This process of soldering and unsoldering may be used to satisfy the requirements of the resistance to soldering heat test (see 3.46). Upon completion of unsoldering of the wires, be care must be taken to remove any flux contamination. The flux may affect the insulation resistance if not properly cleaned.

6.12 Changes from previous issue. Does not apply.

PROCEDURE FOR QUALIFICATION INSPECTION

A.1 SCOPE

A.1.1 Scope. This appendix details the procedure for submission of samples for qualification inspection of filter connectors covered by this specification. The procedure for extending qualification of the required sample to other filter connectors covered by this specification is also outlined herein. This appendix is a mandatory part of the specification. The information contained herein is intended for compliance.

A.2 APPLICABLE DOCUMENTS.

This section is not applicable to this appendix.

A.3 SUBMISSION

A.3.1 Qualification test samples. Three filter connectors representing the current manufactured design for which qualification is sought shall be submitted.

A.3.1.1 Mating connector. A mating connector shall be supplied with each filter connector submitted. The mating plug or receptacle shall be military qualified.

A.3.1.1.1 MIL-DTL-26482 style filter connectors. When MIL-DTL-26482 style filter connectors are submitted for qualification testing, the mating connectors shall be in accordance with MIL-DTL-26482 series II.

A.3.1.2 Sample selection. The samples shall be selected with the following considerations:

a. Shell style.

b. Filter.

c. Mating contact.

d. Contact termination style: Solder cup, crimp, or PC tail.

e. Shell size.

f. Configuration.

g. Internal construction: Soldered or solderless.

h. Voltage rating: Standard 500V DWV or high voltage for lightning survivability.

i. Finish.

A.3.1.3 Service rating. Service ratings can be mixed between the different connector series that have been submitted for qualification.

A.3.2 Changes in design. After qualification has been granted, no changes shall be made to the filter connector design which could adversely affect performance, mating, interchangeability, or installation requirements without prior notification of the qualifying activity. In addition, the modified design shall be subjected to the tests of table A-I. Samples submitted to the inspection for design certification shall have successfully completed the group A inspection.

TABLE A-I. Inspection for design certification.

Inspection	Requirement paragraph	Test method paragraph
Visual inspection	3.19	4.10.1
Dielectric withstanding voltage (at sea level) 1/	3.20	4.10.2
Insulation resistance (+25°C) 1/	3.21	4.10.3
Capacitance to ground 2/	3.22	4.10.4
Crosstalk capacitance	3.23	4.10.5
Dissipation factor	3.24	4.10.6
Insertion loss (+25°C, 100MHz)	3.27	4.10.9
Crosstalk insertion	3.28	4.10.10
Thermal shock	3.25	4.10.7
Voltage spike (when specified, see 3.1)	3.35	4.10.17
Lightning (when specified, see 3.1)	3.36	4.10.18
Capacitance (at temperature extremes)	3.22	4.10.4
Insulation resistance (+125°C)	3.21	4.10.3
Insertion loss (at elevated ambient temperature)	3.27	4.10.9
Voltage conditioning	3.26	4.10.8
Visual inspection	3.19	4.10.1

1/ Dielectric withstanding voltage and insulation resistance (+25°C) may be tested simultaneously.
2/ Capacitance should be measured prior to the application of voltage. The application of voltage will temporarily polarize the dielectric and depress the capacitance.

A.4 EXTENT OF QUALIFICATION

A.4.1 Extent of qualification. Extent of qualification shall only be applicable for filter connectors of the same military connector type (e.g. MIL-DTL-38999). Qualification for one filter connector may be the basis for qualification of another filter connector provided that the filter connector involved is manufactured using the same facilities, processes, and materials as the product originally submitted for qualification.

A.4.1.1 Filter.

A.4.1.1.1 Filter type. Extent of qualification for filter types shall be as indicated in table A-II.

TABLE A-II. Extent of qualification for filter types.

Qualification of filter type	Will qualify filter type
C	C
L1	L1, L2, C
L2	L2, L1, C
Pi	Pi, L1, L2, C
T	T, L1, L2

A.4.1.2 Shell size. Qualification of shell sizes shall be restricted to sizes equal to or smaller than the shell size submitted.

A.4.1.3 Voltage rating. Extent of qualification shall be restricted to filter connectors of the same voltage rating.

A.4.1.4 Finish. Extent of qualification for filter connector finishes not tested shall be restricted to qualified finishes in the applicable military specification covering the connector to which the filter connector is intended to mate.

CERAMIC PLANAR CAPACITOR ARRAY REQUIREMENTS

B.1. SCOPE

B.1.1 Scope. This appendix specifies the general requirements for ceramic dielectric, fixed, planar capacitor arrays. Two product reliability levels are offered: B level (standard reliability) and T level (high reliability). Planar capacitor arrays furnished to the requirements of this appendix are intended for use in electromagnetic interference (EMI) suppression filter connectors covered by this specification. This appendix is a mandatory part of this specification.

B.1.2 Classification.

B.1.2.1 Product level. Two product levels of planar capacitor arrays are provided for in this appendix.

a. B level – B level is the base product level of this appendix and is intended for use in B level filter connectors covered by this specification. B level planar capacitor arrays are those which have been subjected to and passed all applicable requirements, tests, and inspections detailed herein, including B level conformance inspection requirements.

b. T level - T level is the highest product level of this appendix and is intended for use in T level filter connectors covered by this specification. T level planar capacitor arrays are those which have been subjected to and passed all applicable requirements, tests, and inspections detailed herein, including T level conformance inspection requirements.

B.2 APPLICABLE DOCUMENTS

B.2.1 General. The documents listed in this section are specified in sections 3 and 4 of this appendix. This section does not include documents cited in other sections of this appendix or recommended for additional information or as examples. While every effort has been made to ensure the completeness of this list, document users are cautioned that they must meet all specified requirements of the documents cited in sections 3 and 4 of this appendix, whether or not they are listed.

B.2.2 Non-Government publications. The following documents form a part of this document to the extent specified herein. Unless otherwise specified, the issues of these documents are those cited in the solicitation or contract.

THE INSTITUTE FOR INTERCONNECTING AND PACKAGING ELECTRONIC CIRCUITS INC. (IPC)

IPC J-STD-006 - Requirements for Electronic Grade Solder Alloys and Fluxed and Non-fluxed Solid Solders for Electronic Soldering Applications.

(Copies of these documents can be ordered online at www.ipc.org or from the Institute for Interconnecting and Packaging Electronic Circuits (IPC, INC.), 2215 Sanders Road, Suite 200 South, Northbrook, IL 60062.)

B.2.3 Order of precedence. Unless otherwise noted herein or in the contract, in the event of a conflict between the text of this document and the references cited herein (except for related specification sheets), the text of this document takes precedence. Nothing in this document, however, supersedes applicable laws and regulations unless a specific exemption has been obtained.

B.3 REQUIREMENTS

B.3.1 Procurement document. The individual part requirements shall be as specified herein and in accordance with the applicable procurement document or drawing. In the event of any conflict between requirements of this appendix and the procurement document or drawing, the latter shall govern.

B.3.1.1 Physical and electrical requirements. Manufacturers of filter connectors built in accordance with this specification shall specify the requirements for individual planar capacitor arrays that shall include, but are not limited to, the following physical and electrical requirements:

a. Product level (see B.1.2.1 and B.3.2).

b. Physical dimensions and terminations (see B.3.9).

c. Hole identification (see B.3.10).

d. Surface passivation requirements (if applicable, see B.3.5).

e. Spring clip requirements (if applicable, see B.3.7).

f. Electrical characteristics:

(1) Voltage rating.

(2) Capacitance and tolerance (see B.3.14).

(3) Insulation resistance (see B.3.13).

(4) Dielectric characteristic (see 3.15.3.1.1 and B.3.8).

B.3.2 Product levels. Two product levels of planar capacitor arrays are provided for in this appendix, B level and T level. T level is the highest product level of this appendix and is intended for space applications.

B.3.3 Construction: Capacitor arrays shall be made from ceramic which contains interleaved electrodes formed into a monolithic block. A common ground connection shall be terminated around the entire periphery. Internal and external grounds shall be continuous. Integrity of internal construction shall be sufficient to meet the requirements of EIA-469. The use of ground “pillars” is acceptable.

B.3.4 Materials. The materials shall be specified herein. However, when a definite material is not specified, a material shall be used which will enable the planar capacitor array to meet the performance requirements of this appendix. Acceptance or approval of any constituent material shall not be classified as a guarantee of the acceptance of the finished product.

B.3.4.1 Pure tin. The use of pure tin, as an underplate or final finish, is prohibited both internally and externally. Tin content of planar capacitor array components and solder shall not exceed 97 percent, by mass. Tin shall be alloyed with a minimum of 3 percent lead, by mass (see 6.5).

B.3.4.2 Electrode parameters. Base metal electrodes (BME) shall not be used in planar capacitor arrays.

B.3.5 Surface passivation. An insulating polymer coating shall be employed for planar capacitor arrays rated greater than 500 volts dc to prevent flashover. For T level, planar capacitor arrays, faces shall always be covered with an insulating polymer coating. The coating shall be able to withstand exposure to Iso-Propyl-Alcohol (IPA) for 30 -0+1 seconds. Application of coating shall overlap pad plating/metallization while providing sufficient pad surface area to allow formation of proper solder joint fillet.

B.3.6 Mounting. The perimeter, ground, termination of the planar capacitor array shall not be a soldered interface.

B.3.7 Contact mounting. When used in filter connectors, electrical connection of the contacts to the planar capacitor array holes may be accomplished through soldered or spring contacts.

B.3.8 Dielectric characteristic. The dielectric characteristic shall be as specified in table VIII.

B.3.8.1 Dielectric thickness. Planar capacitor arrays shall have a minimum of three layers of dielectric that have sufficient thickness to meet the electrical specifications on in the drawing (see B.3.1) and shall not be less than 1.0 mil (0.025 mm). Dielectric thickness is the actual measured thickness of the fired ceramic dielectric layer

B.3.9 Physical dimensions and terminations. The planar capacitor array dimensions and terminations shall meet the requirements specified by the acquiring activity drawing (see B.3.1). These requirements shall include, but are not limited to: Physical dimensions, hole pattern and diameter, and termination pad diameter.

B.3.10 Hole identification. The acquiring activity drawing (see B.3.1) shall identify each hole of the planar capacitor array. In those cases where there is a mix of capacitance values or types, the holes shall be specified in table form as feed-through, ground, or capacitive (as indicated by a capacitance value).

B.3.11 Orientation. The acquiring activity drawing (see B.3.1) shall show the top surface of the array and identify it as the mating face in accordance with the applicable military standard covering the interface of the intended connector to be used (see 3.1). This surface shall be marked as pin or socket as applicable. The orientation of the planar capacitor array shall be identified by notches in the periphery or, in the case where the notch will affect the internal electrodes; a red or orange epoxy ink dot shall be used on the top surface of the array. Circular planar capacitor arrays shall have a notch or epoxy ink dot as close to the 12 o'clock position as possible. Additionally, multifunction circular planar capacitor arrays shall have a pair of notches or epoxy ink dots in the right hand quadrant of the pin engaging face.

B.3.12 Dielectric withstanding voltage (DWV). When planar capacitor arrays are tested as specified in B.4.4.1, there shall be no breakdown, flashover, or impairment of any characteristics sufficient to cause failure of the planar capacitor array.

B.3.13 Insulation resistance. When planar capacitor arrays are tested as specified in B.4.4.2, the insulation resistance shall not be less than the value specified (see B.3.1). Insulation resistance may be combined with DWV by measuring the insulation resistance at the DWV level. If combined with DWV, there shall be no evidence of breakdown or flashover.

B.3.14 Capacitance. When planar capacitor arrays are tested as specified in B.4.4.3, the capacitance shall be as specified by the acquiring activity (see B.3.1).

B.3.15 Dissipation factor. When determined as specified in B.4.4.4, the dissipation factor shall not exceed 2.5 percent for BX or X7R characteristic, 0.15 percent for BP or C0G characteristic.

B.3.16 Crosstalk capacitance. Unless otherwise specified (see B.3.1), when planar capacitor arrays are tested as specified in B.4.4.5, the crosstalk capacitance to any adjacent or nonadjacent hole shall be less than 25 pFd for BX and X7R or less than 10 pFd for BP and C0G.

B.3.17 Visual examination. When examined as specified in B.4.4.6, planar capacitor arrays that deviate from the material, design, or construction requirements specified (see B.3.1) or exhibit any of the following defects shall be unacceptable:

B.3.17.1 Termination metallization.

a. The termination pads and perimeter, ground, termination shall be at least 80 percent covered with metallization. Pinholes shall not cover more than 5 percent of the metalized area or be larger than 5 mils (0.127 mm) in diameter.

b. There shall be no cracks in the metallization.

c. There shall be no excess metallization which violates the minimum termination pad separation of .015 inch (0.381 mm).

d. There shall be no lifting of the metallization.

e. There shall be no foreign material adhering to the metallization

f. Metalized edges shall not be reduced to less than 80 percent due to chipping or the metallization process.

g. Rough or finely chipped edges are not permitted. Chips on the edge that expose internal electrodes are not acceptable.

B.3.17.2 Planar capacitor array surface examination (after termination).

a. There shall be no cracks in the planar capacitor array body.

b. No chips shall be greater that 10 mils (0.254 mm) in diameter or deeper than 3 mils (0.076 mm); these chips shall not cover more than 20 percent of a surface. No internal electrode shall be exposed through the cover.

c. Fused dust or excess material on cover which prevents a planar capacitor array from lying flat shall be cause for rejection. Lumps, burrs, fused cutting dust, or excess dielectric material shall not be greater than 5 mils (0.127 mm) in diameter and shall not protrude more than 10 mils (0.254 mm) out of the surface; they shall not cover more than 20 percent of a surface.

d. Indications of bubbles in dielectric material (such as circular shadows) shall be cause for rejection.

e. Striations shall be cause for rejection.

f. Warpage, using the center of the array as a reference, shall not exceed 5 mils (0.127 mm). Twisting of body shall be cause for rejection.

g. Pinholes shall not cover more than 10 percent of the surface and be no larger than 2 mils (0.051 mm) in diameter.

B.3.17.3 Planar capacitor array surface examination (after passivation, if applicable, see B.3.5). Planar capacitor arrays shall be covered with an insulating polymer coating. Metallic debris in the coating shall not be permitted. Voids in the coating that do not affect the performance of the planar capacitor array may be permitted

B.3.18 Design verification (green stage). When examined as specified in B.4.4.7, the number of ceramic and electrode layers in the pad/stack shall be in accordance with the design (see B.3.1).

B.3.19 Nondestructive internal examination (T level only). T level planar capacitor arrays shall be subjected to ultrasonic examination or some other method of nondestructive internal examination as determined by the manufacturer and approved by the acquiring activity. When examined as specified in B.4.4.8, there shall be no T level planar capacitor arrays delivered that show unacceptable responses as defined in EIA-469.

B.3.20 Solderability. When planar capacitor arrays are tested as specified in B.4.4.9, the immersed metalized surface shall be at least 90 percent covered with a new, smooth, solder coating. The remaining 10 percent may contain only small pinholes or rough spots; these shall not be concentrated in one area. Bare metal where the solder immersion failed to cover the original coating is an indication of poor solderability and shall be cause for failure. In case of dispute, the percent of coverage with pinholes or rough spots shall be determined by actual measurement of these areas, as compared to the total area.

B.3.21 Destructive physical analysis (T level only). When examined as specified in B.4.4.10, T level planar capacitor arrays shall meet the requirements of EIA-469 and B.3.21a through B.3.21h, inclusive. B Level planar arrays will not be subjected to a DPA except as need for failure analysis.

a. Chipping of termination edge (see figure B-1B) shall be cause for rejection if it will hinder uniform metallization or if it extends to or is near (within 3 mils (0.076 mm)) an electrode plate.

b. Number of electrodes shall correspond to the electrode number specified for each lot (see B.3.1).

c. Thin covers less than 5 mils (0.127 mm) shall be cause for rejection (see figure B-1B).

d. Electrode shorts (see figure B-1B) shall be cause for rejection.

e Discontinuities in the electrodes, if not by design (see B.3.1), shall be cause for rejection.

g. Isolated electrodes or electrode fragments connected to the termination shall be cause for rejection.

h. There shall be uniform contact between the electrodes and the metallization.

B.3.22 Dielectric breakdown voltage (T level only). When measured as specified in B.4.4.11, $\overline{X} - 3\sigma$ (the mean – 3 standard deviations) of the dielectric breakdown voltage shall be greater than 250 percent of the dc rated voltage of the planar capacitor array.

B.3.23 Workmanship. Planar capacitor arrays shall be processed in such a manner as to be uniform in quality and shall meet the requirements of B.3.1, B.3.3, B.3.4, B.3.9 and all performance requirements. The planar capacitor arrays shall pass the visual inspection criteria as specified in B.4.4.6 and shall be free of other defects that will affect life, serviceability, or appearance.

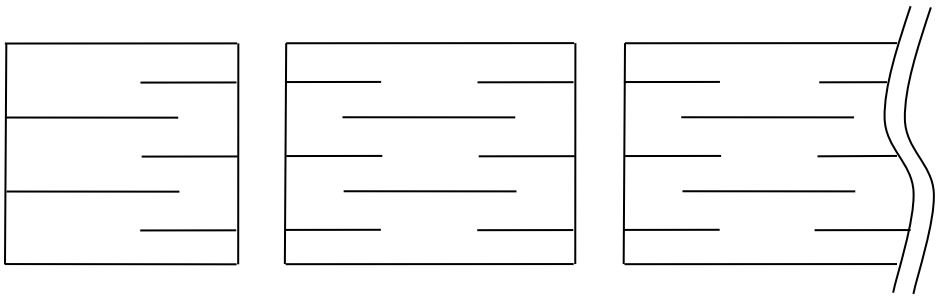

B-1A ACCEPTABLE

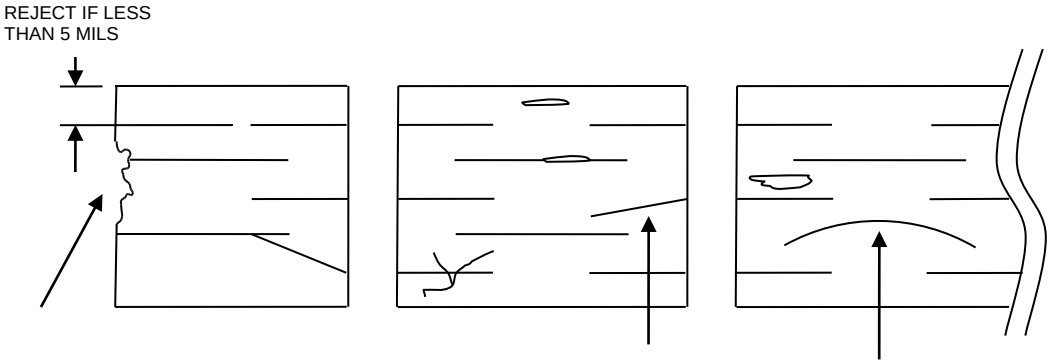

B-1B REJECTS

FIGURE B-1. Sectioned planar capacitor arrays.

B.4. VERIFICATION

B.4.1 Classification of inspection.

a. In-process inspection (see B.4.3.1).

b. Quality conformance inspection.

(1) Group A inspection (see B.4.3.3).

(2) Group B inspection (see B.4.3.4).

B.4.2 Inspection conditions and reference measurements.

B.4.2.1 Conditions. Unless otherwise specified herein, all inspections shall be performed in accordance with the test conditions specified in the "GENERAL REQUIREMENTS" of MIL-STD-202 except relative humidity shall not exceed 75 percent. Accuracy of all test voltage measurements shall be within ±2.0 percent of the specified voltage.

B.4.2.2 Reference measurements. When requirements are based on comparative measurements made before and after conditioning, the reference measurement shall be considered the last measurement made at +25°C ±3°C prior to conditioning. Unless reference measurements have been made within 30 days prior to the beginning of conditioning, they shall be repeated.

B.4.2.3 Power supply. The power supply used for life testing shall have a regulation of ±2 percent or less of the specified test voltage.

B.4.3 In-process inspection and quality conformance inspection.

B.4.3.1 In-process inspection. Each production lot of parts shall be inspected in accordance with table B-I. The nondestructive internal examination shall be for T level only. Other screening examinations may be applied at the option of the manufacturer, as approved by the acquiring activity.

B.4.3.1.1 Failure of parts/lots. Parts that fail the 100 percent screens are considered rejects and shall not be considered as conforming products.

TABLE B-I. In-process inspection.

Inspection	Requirement paragraph	Test method paragraph	Sample size
Design verification (green stage)	B.3.18	B.4.4.7	1/
Nondestructive internal examination (T level only)	B.3.19	B.4.4.8	100%
Visual examination	B.3.17	B.4.4.6	100%

1/ Design verification (green stage) shall be performed on each pad/stack.

B.4.3.2 Inspection of product for delivery

a. B level: Inspection of product for delivery shall consist of the group A inspection.

b. T level: Inspection of product for delivery shall consist of the group A and group B inspections.

B.4.3.2.1 B level inspection lot. An inspection lot shall consist of all planar capacitor arrays of a single design, produced under essentially the same conditions, and offered for inspection at one time.

B.4.3.2.2 T level inspection lot. An inspection/production lot shall be of one design. As a minimum requirement, the lot shall consist of all the planar capacitor arrays of a single nominal voltage rating of one design, from the same dielectric material batch, and processed as a single lot through all the manufacturing steps on the same equipment, and identified with the same date and lot code designation. In addition, the lot shall conform to the following:

a. Raw materials such as end terminations, ceramic raw materials, binders, and electrode ink shall be traceable to the same lot or batch and be from the same contractor.

b. A lot number shall be assigned before electrode printing (inking) and be manufactured from the same slurry and cast on the same belt or comparable equipment.

c. A single mix of a basic ceramic formulation fired through one kiln with one temperature profile during the process, with constant dielectric design, with, in general, no more than 20 percent variation in the number of active dielectrics being assembled in one continuous buildup. Sublots may be allowed to provide a spread in capacitance value to improve the yield. This will normally be done in the case of tight tolerances and low capacitance. In these circumstances, more than 20 percent variation in the number of active dielectrics may be required.

d. End termination material shall be consistent in formulation and traceable to a single batch and shall be fired in the same kiln with no temperature adjustment during the process. All parts shall enter the kiln in one continuous operation/run for end termination firing.

e. Lot identity shall be maintained from the time the lot is assembled to the time it is accepted.

f. The lot date code (LDC) shall be recorded after firing and after end termination firing.

B.4.3.3 Group A inspection. Group A inspection shall consist of the tests specified in table B-II. Subgroup 1 tests shall be performed on 100 percent of the product supplied under this appendix to the extent specified. Failure to meet PDA requirements shall cause the lot to be rejected. Unless otherwise specified, the PDA for B level shall be 10 percent and the PDA for T level shall be 5 percent. Subgroup 2, subgroup 3, and subgroup 4 samples shall be randomly selected in accordance with table B-II. There shall be no failures allowed. Subgroup 3 and subgroup 4 are for T level planar capacitor arrays only.

TABLE B-II. Group A inspection.

Inspection	Requirement paragraph	Test method paragraph	Sampling procedure
Subgroup 1 Dielectric withstanding voltage (at sea level) 1/ Insulation resistance (+25°C) 1/ Capacitance Dissipation factor Visual and mechanical examination: material, physical dimensions, design and construction, marking, and workmanship	 B.3.12 B.3.13 B.3.14 B.3.15 B.3.17, B.3.23	 B.4.4.1 B.4.4.2 B.4.4.3 B.4.4.4 B.4.4.6	100%
Subroup 2 Crosstalk Capacitance Solderability	 B.3.16 B.3.20	 B.4.4.5 B.4.4.9	2
Subgroup 3 Destructive physical analysis (T level only)	B.3.21	B.4.4.10	2
Subgoup 4 Dielectric voltage breakdown (T level only)	B.3.22	B.4.4.11	2

1/ Dielectric withstanding voltage and insulation resistance may be tested simultaneously.

B.4.3.4 Group B inspection (T Level Only). Group B inspection shall consist of the tests specified in table B-III in the order shown. An agreed upon number of planar capacitor arrays shall be shipped to the acquiring activity and then assembled into array assemblies and placed into connector shells and completed. Group B inspection shall be performed on these assembled connectors. The units shall be selected at random from the inspection lot that has passed group A inspection. T level planar capacitor arrays may be shipped upon successful completion of voltage conditioning test (see 3.26).

B.4.3.4.1 Sampling plan. Samples shall be submitted for group B inspection in accordance with table B-III. The samples for subgroup 2 shall be selected at random from parts that have passed the tests of subgroup 1.

B.4.3.4.2 Failures. No failures are allowed in table B-III.

B.4.3.4.3 Disposition of sample units. Sample units that have been subjected to group B inspection shall not be delivered on the contract or purchase order.

TABLE B-III. Group B inspection (T level only).

Inspection	Requirement paragraph	Test method paragraph	Sample size 1/	Failures permitted
Subgroup 1				
Thermal shock (20 cycles)	3.25	4.10.7		
Voltage Conditioning	3.26	4.10.8	6	0
Crosstalk capacitance	3.23	4.10.5		
Subgroup 2				
Dielectric characteristic	3.29	4.10.11	2	0

1/ Assembled planar capacitor arrays installed in connector shells (see B.4.3.4).

B.4.3.4.4 Noncompliance. If a sample fails to pass group B inspection, the manufacturer shall immediately notify the acquiring activity of such failure and take corrective action on the materials or processes, or both, as warranted, and on all units of product which can be corrected and which were manufactured under essentially the same conditions, with essentially the same materials and processes, and which are considered subject to the same failure. Acceptance and shipment of the product shall be discontinued until corrective action, acceptable to the acquiring activity, has been taken. After the corrective action has been taken, group B inspection shall be repeated on additional sample units (all inspections, or the inspection which the original sample failed, at the option of the acquiring activity). Group A (and group B if applicable) inspection may be reinstituted; however, final acceptance shall be withheld until the group B inspection has shown that the corrective action was successful. In the event of failure after inspection, information concerning the failure and corrective action taken shall be furnished to the acquiring activity.

B.4.4 Methods of inspection.

B.4.4.1 Dielectric withstanding voltage (see B.3.12). Planar capacitor arrays shall be tested in accordance with method 301 of MIL-STD-202. The following details and exceptions shall apply:

a. Magnitude and nature of test voltage: 250 percent of the dc rated voltage.

b. Duration of application of test voltage: 5 seconds ±1 second. The test voltage shall be raised from zero to the specified value within 1 second, maximum.

c. Points of application of test voltage: The test voltage shall be applied between each individual capacitor in turn, and all other capacitors and the perimeter termination tied together.

d. Limiting value of surge current: Shall be limited to 50 mA.

e. Examination after test: Planar capacitor arrays shall be examined for evidence of damage or breakdown.

B.4.4.2 Insulation resistance (at +25°C) (see B.3.13). Planar capacitor arrays shall be tested in accordance with method 302 of MIL-STD-202. The following details and exceptions shall apply:

a. Test temperature: +25°C ± 3°C.

b. Test potential: Rated voltage.

c. Special conditions: If failure occurs at a relative humidity above 50 percent, the insulation resistance may be measured again at any relative humidity less than 50 percent.

d. Points of measurements: Between each individual capacitor in turn, and all other capacitors and the perimeter termination tied together.

e. The test may be terminated once the minimum insulation resistance level has been reached. If performing the DWV test (see B.4.4.1) and the minimum insulation resistance has been reached; the test voltage shall be applied for the minimum of 5 seconds before the test may be terminated.

B.4.4.3 Capacitance (see B.3.14). Planar capacitor arrays shall be tested in accordance with method 305 of MIL-STD-202. The following details and exceptions shall apply:

a. Test frequency: 1 MHz ±100 KHz when the nominal capacitance is 100 pF or less, and 1 KHz ±100 Hz when the nominal capacitance is greater than 100 pF.

b. Voltage: A root-mean-square potential (RMS) of 1.0 volt ±0.2 volt for 1 KHz measurements and less than 1.0 volt for 1 MHz measurements.

B.4.4.4 Dissipation factor (see B.3.15). The dissipation factor shall be measured with a capacitance bridge or other suitable method at the frequency and voltage specified in B.4.4.3. Unless otherwise specified, the inherent accuracy of the measurement shall be ±2 percent of the reading plus 0.1 percent dissipation factor (absolute). Suitable measurement techniques shall be used to minimize errors due to the connections between the measuring device and the capacitor.

B.4.4.5 Crosstalk capacitance (see B.3.16). The crosstalk capacitance shall be measured in accordance with B.4.4.3. The following details and exceptions shall apply:

a. Using a Kelvin 4-wire configuration, connect one set of paired leads (high) to one hole in the planar capacitor array and the other set of paired leads (low) to an adjacent hole with the same capacitance. Attach the ground lead to the array perimeter, ground, termination.

b. Unless otherwise specified (see B.3.1), no more than 3 adjacent pairs of the same capacitance value need to be measured.

B.4.4.6 Visual examination (see B.3.17). Planar capacitor arrays shall be examined under 10 power magnification to determine compliance with the requirements specified herein. The apparatus for this inspection shall include optical equipment capable of 10 power magnification and any other visual standards (gauges, drawings, photographs, etc.) necessary to perform an effective examination.

B.4.4.7 Design verification (green stage) (see B.3.18). The manufacturer shall provide a non functional area on the pad/stack where each electrode layer is printed. Upon completion of the green stage, this area shall be bisected and inspected.

B.4.4.8 Nondestructive internal examination (see B.3.19) (T Level only). Planar capacitor arrays shall be subjected to ultrasonic examination or some other method of nondestructive internal examination approved by the acquiring activity that can verify that the planar capacitor arrays meet the requirements of EIA-469. The following details shall also be followed:

a. The ultrasonic test equipment shall be cleaned and maintained in accordance with the test equipment manufacturer's instructions.

b. The test facility shall establish a setup and operating procedure in accordance with the applicable test equipment manufacturer's instructions. Testing shall be done in accordance with the test equipment manufacturer's instructions and the test facility's operating procedures.

c. Each facility shall have a responsible person who has successfully completed a nondestructive testing course for the ultrasonic test equipment. The ultrasonic test equipment shall not be operated by anyone who has not been certified and instructed in the use of ultrasonic testing by the designated person. The responsible person shall prepare a test method that describes the general procedures, requirements, and techniques for ultrasonic scanning of planar capacitor arrays.

d. The test facility shall maintain adequate verification of the results of the ultrasonic examination.

B.4.4.9 Solderability (see B.3.20). Planar capacitor arrays shall be tested in accordance with method 208 of MIL-STD-202. The following details and exceptions shall apply:

a. Solder shall be Pb36 in accordance with IPC J-STD-006.

b. Each planar capacitor array shall be completely immersed.

c. The method of attaching the planar capacitor array to the dipping apparatus shall be so designed as to expose 100 percent of the individual inner terminations and 100 percent of the perimeter termination.

d. Examination of terminations shall be in accordance with B.3.20.

B.4.4.10 Destructive physical analysis (see B.3.21) (T Level only). Planar capacitor arrays shall be examined in accordance with EIA-469.

B.4.4.11 Dielectric breakdown voltage (see B.3.22) (T level only). Planar capacitor arrays shall be placed in an oil (or other suitable dielectric fluid) bath and connected in series with an instrument to measure current in the mA range. A dc voltage shall be gradually applied at no greater than 100 volts per second until failure occurs. The dielectric breakdown voltage test shall be applied to 3 holes, minimum; an external location, an internal location, and a location on the opposite half of the array. The dielectric breakdown voltages shall be recorded for the samples and the mean and standard deviation calculated.

Note: Adjacent holes should not be tested and all of the holes cannot be tested. Collateral damage will be created during the breakdown of the location under test. This damage will affect the adjacent locations, even some that are two locations away. Attachment to the array contact locations may be accomplished by soldering a pin to the location.

REAL TIME RADIOGRAPHIC INSPECTION

C.1 SCOPE

C.1.1 Scope. This appendix specifies the procedures and practices necessary for real time radiographic inspection of T level filter connectors during qualification and group A acceptance inspection. This appendix is a mandatory part of this specification. The information contained herein is intended for compliance.

C.1.2 Facilities. Radiographs of the filter connectors may be made by the filter connector manufacturer or a suitable independent laboratory. In either case, facilities, equipment, personnel, and techniques shall be in accordance with the requirements specified herein.

C.1.3 Responsibility for inspection. The filter connector manufacturer shall perform the inspection of the radiographs and acceptance/rejection of the filter connectors.

C.2 APPLICABLE DOCUMENTS. This section is not applicable to this appendix.

C.3 EQUIPMENT

C.3.1 Radiography. The x-ray equipment shall have a minimum voltage range of 10 to 160 kilovolts (kV) and a focal spot of 20 micrometers (µm) or less. The equipment shall have a minimum of 4 axes (x, y, z, and rotation) of manipulation with a magnification capability of 10X or higher.

C.3.2 Sensitivity. The x-ray exposure factors, voltage and current settings shall be selected or adjusted as necessary to obtain a satisfactory exposure and achieve maximum image detail. The radiographic quality shall render a clear sharp image capable of detecting all specified defects (see 3.1 and 3.30).

C.3.3 Holding fixtures. The holding fixture shall be capable of holding a filter connector in the required position without interfering with the accuracy of image interpretation. The filter connector shall be mounted in the holding fixture so that it is not damaged or contaminated.

C.3.4 Viewing equipment. The real time radiograph shall be viewed on a video or computer monitor capable of showing clear, sharp images of all specified defects (see 3.1 and 3.30).

C.3.5 Radiographs. When permanent radiographs are required, the radiographs may consist of Polaroid, thermal or digital prints. The radiographic quality shall be suitable for showing a clear, sharp image of all specified defects (see 3.1 and 3.30).

C.3.5.1 Labeling. The radiographic print shall have the following identification information:

a. Part manufacturer's name.

b. Part number (as marked on part).

c. Part cross-reference.

d. Date or lot code (as marked on part).

e. View number.

f. X-ray laboratory name.

C.4 REPORTS AND RECORDS

C.4.1 Report of inspection. Unless otherwise specified by the contract, the testing activity shall furnish inspection reports signed by an authorized representative of the testing activity. The reports shall give the results of the real time radiographic inspection and shall list the part number, the number of parts inspected, the number of parts rejected, and the date of the test.

C.4.2 Records of inspection. A complete record of details of inspection shall be kept by the manufacturer or testing laboratory. The record shall list the voltage potentials and currents used in the real time radiographic process, the time of exposure, the distance of the source of radiation from the surface of the filter connector, the screens and filters used, the size of the focal spot, and the part number and lot or dated code of the filter connectors.

C.5 PERSONNEL

C.5.1 Radiographer. Personnel engaged in real time radiographic processing shall be familiar with the requirements of this specification and with all applicable documentation controlling real time radiographic quality of parts and materials being inspected. The radiographers shall be certified by their employer to be capable of evaluating radiographs to determine conformance of parts and materials to the requirements of all applicable documentation.

C.5.2 Radiographic interpreters. Personnel engaged in the interpretation of radiographs shall be familiar with the requirements of this specification and with all applicable documentation controlling radiographic quality of parts and materials being inspected. The radiographic interpreters shall be certified by their employer to be capable of evaluating radiographs to determine conformance of parts and materials to the requirements of all applicable documentation.

C.5.3 Vision. The minimum vision requirements for visual acuity of personnel inspecting film shall be as follows:

a. Distant vision shall equal 20/30 in at least one eye, either corrected or uncorrected.

b. Near vision shall be such that the individual can read Jaeger type no. 2 at a distance of 16 inches (40.64 centimeters) either corrected or uncorrected.

C.5.4 Vision tests. Vision tests shall be performed by an oculist, optometrist, or by other professionally recognized personnel. One year from the effective due date of original certification, and each year thereafter, certified personnel shall be required to pass the vision tests specified herein.

QUALITY SYSTEM-QML

D.1 SCOPE

D.1.1 Scope. This appendix contains details of the quality system for MIL-PRF-FILCON filter connectors whose interface is controlled by various military and industry connector specifications. The quality system shall be in accordance with MIL-STD-790 and will address the verification system of this specification which measures and evaluates the manufacturer's manufacturing process against a baseline for that process. This baseline can include innovative and improved processes that result in an equivalent or higher quality product, provided that the process used to evaluate and document these changes has been reviewed and approved by the qualifying activity. Changes to the process baseline can be made by the manufacturer after achieving approval with documented reliability and quality data. The approach outlined in this appendix is a proven baseline, which contains details of a quality system including best commercial practices. Manufacturers shall demonstrate to the qualifying activity a quality system that achieves at least the same level of quality as could be achieved by complying with this appendix. Certification is provided by the qualifying activity upon approval by the preparing activity (for equivalent quality systems) and qualifying activity. Reduction and alternate test will be approved on a case-by-case basis. A qualified products supplier is compliant to this appendix. A qualified products supplier is one who exercises a system, which focuses on product and inspections. The DLA Land and Maritime audit is product, system, and process oriented. This appendix is a mandatory part of the specification. The information contained herein is intended for compliance.

D.2 APPLICABLE DOCUMENTS

D.2.1 General. The documents listed in this section are specified in sections D.3 of this specification. This section does not include documents cited in other sections of this specification or recommended for additional information or as examples. While every effort has been made to ensure the completeness of this list, document users are cautioned that they shall meet all specified requirements of documents cited in sections D.3 of this specification, whether or not they are listed.

D.2.2 Non-Government publications. The following documents form a part of this document to the extent specified herein. Unless otherwise specified, the issues of the documents are those cited in the solicitation or contract.

NATIONAL CONFERENCE OF STANDARDS LABORATORIES (NCSL)

NCSL Z540.3 - Requirements for the Calibration of Measuring and Test Equipment

(Copies of this document are available online at www.ncsli.org or National Conference of Standards Laboratories, 1800 30th Street, Suite 305B, Boulder, CO 80301)

TECHAMERICA

TECHAMERICA EIA 557 - Statistical Process Control Systems.

(Copies of this document are available online at www.techamerica.org or TechAmerica, 601 Pennsylvania Ave., NW, North Building, Ste.600, Washington, DC 20004-2650)

D.2.3 Order of precedence. In the event of a conflict between the text of this document and the references cited herein (except for related specification sheets (see 3.1), the text of this document will take precedence. Nothing in this document, however, supersedes applicable laws and regulations unless a specific exemption has been obtained.

D.3 REQUIREMENTS

D.3.1 Responsibility and authority.

D.3.1.1 Basic and contracted plant requirements. Filter connectors furnished under this specification shall comply with the performance requirements of section 3, herein, and shall be prepared for delivery in accordance with section 5, herein. The verification system shall assure that the design, processing, assembly, inspection, and testing of filter connectors comply with this specification, the specification sheet and the applicable sections of the connector interface specification to which the filter connector is intended to mate. This system will apply to all the major components of the connector, including shells, inserts, rubber seals, contacts; the ceramic filter (planar capacitor array or chip capacitors), and the inductive component (ferrite). The quality system shall be in compliance with MIL-STD-790 and incorporate the applicable requirements of this specification.

D.3.1.1.1 Definition of a manufacturer. The manufacturer is the basic plant. For guidance on specific business scenarios, details of implementation, financial commitment to this program, or interpretation of criteria herein, contact the qualifying activity.

D.3.1.1.1.1 Basic plant. The basic plant is where component manufacture, and/or filter assembly is performed except the corporate office may be listed as the basic plant whenever any assembly plant is utilized for production. The basic plant has the responsibility for device critical interfaces, performance, quality, and reliability. The manufacturer's designating symbol of the basic plant shall appear on the finished product. Total ownership of the basic plant is required for listing and JAN branding. The basic plant shall be certified and qualified by the qualifying activity. The basic plant shall ensure their subcontractors meet the requirements of this specification and MIL-STD-790. The basic plant shall demonstrate control of all contracted plants to the qualifying activity.

D.3.1.1.1.2 Contracted plant. The basic plant may contract connector assembly or filter fabrication provided control of the contracted plant is demonstrated to the qualifying activity. A written agreement between a basic plant and a contracted plant shall be required for all contracting scenarios. This agreement shall establish who is the basic plant and the contracted plant. For any device type, a basic plant may not contract both connector assembly and filter fabrication. The contracted plant shall be certified by the qualifying activity. Qualification of assembled connectors will be the responsibility of the basic plant.

D.3.1.1.1.2.1 Contracted connector assembly plant. The basic plant may contract connector assembly when control of the contracted plant is demonstrated by the basic plant to the qualifying activity. The basic plant shall have a system to address the applicable requirements of this appendix as determined by and approved by the qualifying activity. All contracted processes shall be identified and FMEAs and control plans shall be implemented for assembly.

D.3.1.1.1.2.2 Contracted filter assembly plant. Contracted planar capacitor array manufacture facilities shall have array lot identification, array lot process documentation, and array lot inspection before, during and after filter assembly. The filter assembly lot inspection shall ensure critical interface requirements meet the mechanical and electrical properties as stated on specification sheet (see 3.1). Depending on the filter connector product level, appropriate controls shall be exercised. Ceramic planar capacitor array manufacture shall be in compliance with appendix B of this specification.

D.3.1.2 Responsibility of the manufacturer. The manufacturer is responsible for the performance of all inspection requirements as specified herein, and in the specification sheet (see 3.1). The manufacturer may use their own or other suitable facilities which have been approved and granted laboratory suitability by the qualifying activity for the performance of MIL-STD-202 inspection requirements specified herein. The Government or acquiring activity reserves the right to witness or perform any of these inspections set forth herein or in the specification sheets (see 3.1) and to audit the data resulting from the manufacturer's performance of these specifications.

D.3.1.3. Management responsibility. Management shall provide sufficient resources, personnel, and authority necessary for performing all applicable verification and manufacturing certification requirements specified herein. The qualifying activity may require the supplier to contract or utilize an expert of applicable subject matter to resolve ongoing technical issues.

D.3.1.3.1 Personnel. Personnel performing quality functions shall have sufficient well-defined responsibility, authority, and the organizational freedom to identify and evaluate quality problems and to initiate, recommend, or provide solutions.

D.3.1.3.2 Resources. The manufacturer shall identify requirements and provide adequate resources for management, performance of work, verification activities, and internal audits. For the purpose of this document, resources shall include, but not be limited to, materials, equipment, training, and personnel.

D.3.1.4 Organization. A functional block organization chart shall be included in the quality system program (see D.3.2) which shows the lines of responsibility and authority for organization, approval, and implementation of all aspects of the quality program. A management representative shall be identified who has defined responsibility and authority to ensure that the requirements of this specification are met.

D.3.1.4.1 Management representative. The basic plant and contracted plant shall appoint a member of management who, has the authority and responsibility for development and implementation of the quality system, this specification, and associated specification sheets (see 3.1). The management representative is also responsible for coordination with the preparing activity on all specification issues. This individual shall insure that the quality system is maintained and shall periodically report to the manufacturer's management on the performance of the system and opportunities to improve it. The qualifying activity shall be informed whenever there is a change in the management representative. In addition, the plant shall provide a POC (point of contact) with the authority and responsibility to coordinate specifications. All suppliers shall be responsive to all applicable specification issues. The duties and responsibilities of the DLA Land and Maritime POC shall be documented and shall be made available to DLA Land and Maritime.

D.3.1.5 Management review. The manufacturer's management shall maintain an on going cognizance of the status of the quality system (D.3.2) and the design control system (D.3.4) to ensure continuous suitability and effectiveness in satisfying the requirements herein with periodic cross-functional reviews of these systems through a Qualified Products Technical Review Board (QPTRB).

D.3.1.5.1 Qualified Products Technical Review Board (QPTRB). The QPTRB is intended to be a cross-functional management and technical group to ensure communication is established and maintained among representatives from: Management, device design, technology development, planar capacitor array manufacture, filter and connector assembly, test, production, and quality assurance. The members of the QPTRB shall have the responsibility and authority to make decisions and the resources to implement these decisions. Written procedures which will govern the operation of the QPTRB shall be maintained and updated. Records of the QPTRB deliberations and decisions will be maintained and made available to the qualifying activity.

D.3.1.5.1.1 QPTRB duties. The QPTRB shall review the quality system at planned intervals to ensure continuing stability, adequacy, and effectiveness. This review shall include assessing opportunities for improvement and the need for changes to the quality system including quality policy and objectives.

D.3.1.5.1.1.1 QPTRB input.

a. Results of internal and external audits.

b. Production yields.

c. Customer returns/feedback.

d. Corrective/preventive actions.

e. Failure analysis.

f. Design control / qualification initiatives.

g. Contract services.

h. Follow-up actions from previous management reviews.

i. Changes that could affect the quality system.

j. Recommendations for improvement.

D.3.1.5.1.1.2 QPTRB output.

a. The QPTRB shall document and communicate, when applicable, the results of the review.

b. The QPTRB shall set measurable quality objectives and monitor their progress towards meeting those objectives.

c. The QPTRB shall review changes to all governing military and industry specifications and specification sheets (see section 2) and comment back to the preparing activity. Special attention is required when reviewing the military specifications covering the connector to which the filter connector is intended to mate to ensure the manufacturer remains in compliance with all interface dimensions.

D.3.2 Quality system program.

D.3.2.1 Quality system requirements. A quality system shall be established by each manufacturer which implements all requirements of this appendix. This system shall be documented in a quality manual. The current revision of the quality manual shall serve to demonstrate to the qualifying activity that the manufacturer's system is adequate to assure compliance with the applicable specifications and quality standards. Proprietary documents shall be clearly identified by category in the system.

D.3.2.2 Process flows. The system includes process flows for each distinct product family. As a minimum, flows shall include connector fabrication and assembly, planar capacitor array fabrication and filter assembly, screening, and conformance inspection (CI), and shall indicate which CI option has been selected.

D.3.2.3 Quality system procedures. The manufacturer shall implement the approved system. The range and detail of the procedures shall ensure compliance with this system

D.3.2.4 Quality planning. The manufacturer shall define how the requirements for quality will be met. Quality planning shall be consistent with all other requirements of the manufacturer's quality system. The manufacturer shall give consideration to the following activities, as appropriate, in meeting the specified requirements for products.

a. The preparation of quality plans.

b. The identification and acquisition of any controls, processes, equipment (including inspection and test equipment), fixtures, resources, and skills that may be needed to achieve the required quality.

c. Ensuring the compatibility of the design, production process, inspection, and test procedures.

d. The updating, as necessary, of quality control, inspection, and testing techniques, including the development of new instrumentation.

e. The identification of any measurement requirement involving capability that exceeds the known state of the art, in sufficient time for the needed capability to be developed.

f. The identification of suitable verification at appropriate stages in the realization of product.

g. The clarification of standards of acceptability for all features and requirements, including those which contain a subjective element.

h. The identification of all contracted processes. Unless approved by the qualifying activity, all devices assembled in a contracted plant shall be tested (screening and CI) in the basic plant.

D.3.2.4.1 FMEA. Changes in design, materials, or processes for any device shall be reviewed in accordance with established design control procedures. Tools can include process flow charts, control plans, SPC, DOEs, or FMEAs.

D.3.2.4.2 Control plans. The control plan is prepared to summarize the process control planning for each technology. Product characteristics that should be included in a control plan are control item characteristics and significant characteristics. The evaluation method, sampling plans, data analysis method, and out of control plans are part of the control plan.

D.3.2.4.3 Plant moves. For all plant moves, all inventory information shall be made available to the qualifying activity.

D.3.2.4.4 Business interruption control plans. Each supplier shall create a detailed business interruption control plan (e.g., using a Program Evaluation Review Technique (PERT) approach) and it shall be available upon request. The plan shall address some or all of the following as applicable:

a. Finished goods inventory.

b. Filter assembly and component inventory.

c. Training new personnel.

d. New equipment.

e. New design.

f. New processes.

g. New materials.

h. Independent consultants/subject matter experts.

i. Top management understanding and commitment of resources.

j. Impact on quality.

k. Market analysis (customer needs).

l. Sole source and high volume product special attention.

m. Containment.

n. Off site storage of die and finished goods.

o. Security and safety officer (early detection).

D.3.2.4.5 Incoming, in-process, and outgoing inventory control. The manufacturer shall employ procedures to control storage and handling of incoming materials, work in-process, warehoused, and outgoing product in order to 1) achieve such factors as age control of limited-life materials; and 2) prevent inadvertent mixing of conforming and nonconforming materials, work in process, finished product, resubmitted lots, or customer returns.

D.3.3 Conversion of specification requirements. The manufacturer shall have a system to convert specification sheets, orders, and contract requirements to in-house procedures, methods, travelers, and specifications. The system shall include revision and distribution controls to assure that product meets current requirements. The manufacturer's system ensures review of purchase requirements (and modifications) received from their customer. The review shall insure that the order does not violate this specification for qualified product of any level (see 1.2.2) and that any special instructions are accounted for. The system shall provide objective evidence of this review.

D.3.4 Critical interface control.

D.3.4.1 Design, materials, and processing documentation. Each product design shall be fully specified such that all aspects of design, verification testing, processing, and materials are described. In addition, each manufacturer shall have a flow chart, traveler, and DLA Land and Maritime Form 36D for each certified product line (see qualifying activity).

D.3.4.2 Design changes. After qualification, the manufacturer shall notify the qualifying activity prior to the release and shipment (for T level, prior to line implementation, except for evaluation samples) of product which undergoes any change in the product or verification program which affects performance, quality, appearance, reliability, or interchangeability. The changes shall be approved by the qualifying activity prior to release and shipment of product. Changes in design, materials, or processes for any filter connector shall be processed in accordance with established change control procedures for all affected documents (see D.3.6.1 and D.3.7). Such notification shall include a thorough description of the proposed change and a test plan designed to demonstrate that the change will not adversely affect performance, quality, reliability, or interchangeability and that the changed product will continue to meet all specification requirements. The completed test results shall be approved by the qualifying activity. After approval of the design change, all product inventory of the old design shall be submitted to CI within 6 months, unless authorization is extended by the qualifying activity. Unless the design change has been required to correct or eliminate a verified design defect, finished devices manufactured to the previously approved design which are in inventory or in process of testing (i.e., inspection lot identification code assigned) will remain qualified only until that inventory is depleted.

D.3.5 Document control.

D.3.5.1 Document control procedures. The manufacturer shall establish and maintain procedures to control all documents that relate to the requirements of this specification. This includes, to the extent applicable, military and industry specifications and standards and their revisions, amendments, and notices. The manufacturer's procedures are required to be in a language that is understandable by the operator performing the given operation.

D.3.5.2 Document approval and issue. Documents shall be reviewed and approved for adequacy by authorized personnel prior to issue. A procedure shall be established to ensure that the current issue of appropriate documents is available at all required locations, that invalid or obsolete documents are promptly removed from all points of issue, and that any obsolete documents which are retained are suitably identified.

3.5.3 Document changes. Unless designated otherwise, changes to documents shall be reviewed and approved by the same functions/organizations that performed the original review and approval.

D.3.6 Purchasing.

D.3.6.1 Acquisition documentation. A system for the acquisition of supplies and approval of suppliers shall be established. All documents for purchased material will be covered with drawing and specification control providing adequate verification of product conformance and control depending on the product level (see 1.2.2) being processed.

D.3.7 Control of customer supplied material. The manufacturer shall establish and maintain procedures for the control, verification, maintenance and storage, as applicable, of customer supplied materials and equipment. Any material which is lost or becomes unsuitable for use shall be recorded and reported to the customer.

D.3.8 Product identification and traceability. All filter connectors delivered to this specification shall be traceable through the lot identification code and inspection lot records, and identified as in D.3.9 through D.3.12, inclusive. In addition, T level filter connectors shall have a lot control system from planar capacitor array manufacturing through screening which provides planar capacitor array lot identification; operation (machine), date of operation, operator(s) identification, quantity, and serial numbers (if applicable) of connectors processed. Variations will be allowed according to the product level (see 1.2.2) being processed.

D.3.9 Process control. The manufacturer shall assure that all manufacturing operations are carried out to insure continued process capability. Operations shall be controlled as to the manner of production, requirements for monitoring and control, and output product characteristics. Where necessary, due to the complexity or sensitivity of operation parameters, the process shall consider working environment, workmanship criteria, equipment set-up, and the need for special operator certification or continuous monitoring of critical parameters.

D.3.9.1 Statistical process control (SPC). Where SPC is used to control a process, the control shall be established in accordance with EIA-557. If a sample exhibits an out-of-control condition, the product represented by the sample shall be subjected to evaluation and disposition. The evaluation process, results, and disposition shall be documented and traceable.

D.3.9.2 Environmental controls. The relative humidity, temperature, and particle count for each applicable critical process step (e.g., planar capacitor array fabrication, and connector assembly) shall be specified, controlled, and recorded. The procedures and techniques for measuring these environmental parameters and limits shall be documented. The procedures shall contain corrective actions for out-of-tolerance environmental conditions. Unsealed parts shall be handled in such a way as to minimize the introduction of foreign material into the cavity.

D.3.9.3 Chemical controls (planar capacitor array manufacture only). The purity of chemicals, including water, shall be specified and controlled. The purity of process water shall be measured and recorded in terms of resistivity at +25°C (resistivity cells and meters shall be calibrated), total solids, organic impurities, and bacteria count.

D.3.9.4 Ceramic planar capacitor array lot process and inspection (see appendix B). Suppliers shall develop planar capacitor array lot acceptance procedures and criteria. Unless otherwise approved by the qualifying activity, these procedures and criteria shall address testing and lot acceptance testing of each planar capacitor array or planar capacitor array lot as applicable. The methods and procedures, which are utilized within planar capacitor array production for the following functions, as a minimum, shall be documented:

D.3.9.4.1 Process.

a. Sample sizes.

b. Ceramic tape manufacture and handling operations.

c. Array layup, green stage.

d. Drilling and routing processes.

e. Firing process.

f. Electrode process and firing or plating.

D.3.9.4.2 Inspection.

a. Control of array thickness.

b. Metal deposition and thickness.

c. Surface glassivation/passivation thickness.

d. Sonogram inspection depending of the product level (see 1.2.2) of the part being processed.

D.3.9.5 Process monitor programs. Process monitor programs shall be established as referenced below, for processes performed by the manufacturer. A fully implemented and approved SPC program (in accordance with D.3.20.1) may replace all or portions of the process monitor programs with the approval of the qualifying activity. These programs shall be documented and made available to the certification team for review. The implementing procedures shall define sampled population frequency, sample size, reject criteria, allowable rework, and disposition of failed batch/product. Investigative and corrective actions shall be established which address noted deficiencies. A procedure is required for the traceability, recovery, and disposition of all units monitored since the last successful test.

All monitors shall provide for continual process improvement. Records of these monitors shall be available to any (Government or military user) audit team for review. As a minimum, the process monitors shall include the following, or equivalent, as approved by the qualifying activity:

a. Planar capacitor array manufacture: Tape manufacture, layup, electrode screening, pressing, drilling, routing, firing, surface electrode and, as applicable, surface passivation.

b. Filter assembly: Visual inspection and testing, if applicable.

c. Planar capacitor array precap inspection, as applicable, depending on the product level (see 1.2.2) being processed.

d. Connector assembly: Visual inspection and in-process electrical inspection.

D.3.10 Inspection and testing.

D.3.10.1 Inspection of purchased materials. The manufacturer is responsible for assuring that all supplies and services procured from suppliers conform to the contract. The manufacturer shall have a system which controls inspection, storage, and handling of incoming materials, and periodic evaluation of material received. The system may include verification of chemical, physical, and functional characteristics required by manufacturer drawings and specifications. The manufacturer may utilize a certified supplier program to reduce or eliminate receiving inspection.

D.3.10.1.1 Certified supplier program. The capability of supplied material may be validated through a supplier certification system. This program selects and monitors suppliers in order to guarantee that the supplied material will meet and maintain required capability levels (e.g., Cpk, PPM).

D.3.10.2 In-process quality control. The manufacturer shall perform in-process inspections to the extent necessary to assure product conformance to the end item specification. This shall include inspections and tests which assure that the manufacturing processes are in a state of control as indicated in D.3.9, herein.

D.3.10.2.1 Manufacturer imposed tests. Any manufacturer imposed test(s) conducted prior to any qualification or conformance inspection, are to be performed on all subsequent lots until re-qualified. If any manufacturer imposed tests detect a problem, the manufacturer shall submit all filter connectors in the lot to those tests to eliminate rejects and shall take steps to determine and eliminate the cause of failure.

D.3.10.3 Testing and screening operations. Testing and screening operations may only be performed in a facility which has received laboratory suitability approval from the qualifying activity for each MIL-STD-202 test method to be employed. Each facility lists their approved methods and equipment on DLA Land and Maritime Form 36 (Test Equipment List) or equivalent. The manufacturer shall document and update all test fixturing capacity by plant location on the applicable DLA Land and Maritime Form 36(s). The environmental conditions where testing and screening are performed shall be maintained to assure compliance with the requirements of this specification.

D.3.10.4 Final inspection and testing.

D.3.10.4.1 Qualification and conformance inspection. Qualification and conformance inspection shall be performed as required by the specification sheet and herein at a facility which has received laboratory suitability approval from the qualifying activity. The results of testing shall be reviewed and approved.

D.3.10.4.2 Visual inspection. A visual shall be performed on outgoing product prior to shipping. Visual examination shall be in accordance with this specification. Sampling plans and acceptance are to be determined by the supplier and approved by the qualifying activity.

D.3.10.5 Inspection and test verification. The manufacturer shall verify that all inspection and testing required by this specification and their quality plan (see D.3.2.4) has been accomplished as specified. Verification shall clearly show whether the product passed or failed any requirement and shall contain sufficient detail to allow traceability to a specific operator, test date, equipment, and program.

D.3.11 Control of inspection measuring and test equipment.

D.3.11.1 Test programs and setups. The test programs and setups used to sort, classify, and test for MIL-PRF-FILCON requirements are required to be traceable through each document control system to insure the correct revision was used when testing filter connectors and their components.

D.3.11.2 Test equipment maintenance and calibration system. Maintenance and calibration systems and the frequency of scheduled actions, for gauges and test equipment, shall be established. The system may use NCSL Z540.3, or equivalent, as a guideline.

D.3.11.3 Conditions and methods of test. The general requirements, conditions and methods of test shall be in accordance with this specification.

D.3.11.4 Electrical test equipment verification. The manufacturer shall define and utilize a method (e.g., correlation samples, diagnosis routines) to verify the measurement and operation characteristics of the test equipment when in use. In the event of verification of failure, the manufacturer shall utilize a procedure which will determine the requirements for traceability, recovery, and when re-testing is required of all units tested since the last successful verification.

D.3.12 Inspection and test status. A system shall be maintained to insure that products are identified by their test or inspection status. The system shall insure the separation of products that have been tested or inspected from product that has not been inspected.

D.3.13 Control of nonconforming product. The manufacturer shall maintain a system which will prevent the shipment or use of nonconforming product. The system shall provide for identification, segregation, and evaluation of product, which does not conform to specified requirements at any point in the manufacturing and screening flow. Individual filter connectors or lots, which fail any specification or internal tests, procedures, and requirements above and beyond the specification, except electrical selections, are not suitable for any product level (see 1.2.2). Lots failing electrical selections for any product level which, 1) are above and beyond this specification and, 2) are intended to select a portion of a lot having greater performance or reliability than the overall average performance or reliability of the lot other than through statistical methods are not suitable for any product level.

D.3.13.1 Reworked product. Reworked or repaired product shall be re-inspected in accordance with the appropriate procedures. All rework performed shall be documented and shall be attached to the original lot travelers and be traceable and may be part of management review.

D.3.13.2 Rework provisions. All allowable rework on devices manufactured under this specification shall be accomplished in accordance with the manufacturer's established procedures. Lots shall not exceed one rework for any process.

D.3.13.2.1 Filter assembly rework. Filter assemblies shall not be reworked during assembly. These assemblies shall not be subjected to temperatures or processes that will reflow the solder attach material.

D.3.13.2.2 Assembled filter connector rework. Filter connector assembly opening shall be permitted. Unless otherwise specified, rework of finished filter connectors is limited to recleaning, remarking to correct defective marking, and lead straightening or resolder dipping of the leads. After any resolder dipping, filter connectors shall pass as a 100-percent screen, the requirements of group A, subgroup 1 and any hermetic seal requirements, if applicable, of this specification. Solder dip rework shall be in accordance with this specification.

D.3.13.3 Rejected lots. Lots with an unacceptable failure mode shall be rejected (see 4.6.3.1).

D.3.14 Corrective and preventive action.

D.14.1 Corrective action. The system identifies the necessity for corrective action as a result of failure, defect analysis, inappropriate performance of inspections/procedures, product trends, product returns, inappropriate records and audits (both customer and internal). The corrective action system shall provide for the use of a standard format for documenting corrective actions. This standard format shall provide evidence of: Documents created and /or

revised to correct the problem, training, and follow-up to verify implementation and effectiveness. Failure to initiate corrective action may result in removal of products from the qualified product list. The corrective action system shall identify when a failure analysis is to be employed (i.e., field use, user analysis, Government Industry Data Exchange Program (GIDEP), competitive analysis).

D.3.14.2 Preventive action. Appropriate sources of information such as processes and work operations which affect product quality, audit results, quality records, and customer complaints shall be used to detect, analyze, and eliminate potential causes of non-conformities. The methodology for the initiation, implementation, and follow up of preventive actions shall be documented by the manufacturer.

D.3.15 Handling, storage, packaging, and delivery.

D.3.15.1 Security of completed devices. Marked filter connectors which have passed all screening and conformance requirements shall be retained in a secure area prior to shipment delivery. Filter connector inventory shall be controlled by filter connector style, lot identification code, quantity, product level, and transaction date. This requirement applies to both the manufacturer and the distributor(s).

D.3.15.2 Electrostatic discharge sensitive (ESDS) program. The manufacturer of ESDS class 0, 1A, 1B, 1C, and class 2 devices shall institute an ESDS program commensurate with the product classification. The requirements of JESD-625 apply but may be tailored for establishing an ESDS program. Justification for the tailoring shall be made available to the qualifying activity for approval upon request.

D.3.16 Quality records. A system shall be in place to track all quality records, including but not limited to the results of all qualification, screening, conformance tests (attributes and variable data as applicable) and inspections, any required failure analysis, subcontractor records, internal quality audit results, training, and management reviews. The retention period for each type of quality records shall be a minimum of 10 years based on lot date code. Quality records shall be available for review and maintained in an organized manner. Quality records may be retained using paper hard copy or suitable electronic medium. If electronic records are used, the manufacturer shall establish appropriate procedures to ensure the security of such records from loss or alteration. Corrections to “hard copy” quality records shall be made by "lining out" the incorrect entry with a single line (maintaining the legibility of original data) and inserting the correct entry immediately adjacent to the "lined out" entry. The operator making the change shall initial by the "lined out" entry. Erasures, mark overs, and "white out" are not permitted on any quality record. For electronic records, the manufacturer shall establish procedures for making corrections to quality records such that the original record, the date of the change, and the person making the change are clearly identifiable. Quality records of any type and data of any type shall be sent to the qualifying activity or preparing activity upon request.

D.3.17 Internal quality audits.

D.3.17.1 Internal Audit Program. The manufacturer shall establish an independent internal audit program which shall be included in the quality system. The internal audit program shall assess compliance with all MIL-PRF-FILCON requirements (processes and quality systems) and shall identify key review areas, their frequency of audit, and corrective actions shall be resolved through the corrective action system (see D.3.14).

D.3.17.1.1 Internal audit checklist. The internal audit checklist shall assure that the quality system is adequate and followed by all personnel in each area.

D.3.17.1.2 Subcontractor Audits. All subcontractors are to be audited by the certified manufacturer (or by DLA Land and Maritime) annually, to have an available checklist of the audit, a list of any concerns, and corrective actions available to the qualifying activity for review. This does not apply to facilities with DLA Land and Maritime lab suitability. All certified manufacturers shall demonstrate effective control of relevant contracted services as approved by the qualifying activity.

D.3.17.2 Audit schedules and frequencies. The audit frequency shall in no case exceed 1 year for each area unless authorized by the qualifying activity. An internal audit shall be conducted and corrective actions completed prior to the initial qualifying activity audit. The qualifying activity may modify the frequency of the internal audit(s) or require additional inspection based on the effectiveness of the manufacturer's internal audit program, and assessment of the internal audit findings.

D.3.17.3 Auditors. The designated auditors shall be independent from the area being audited. If the use of an independent auditor is not practical, a second individual should be assigned to participate in the audit or review the results. Auditors shall be trained in the area to be audited, in the applicable military and industry specification requirements and provided with an appropriate checklist for annotating deficiencies. Prior to the audit, the assigned auditor(s) shall review the previous internal audit results to assure corrective actions have been implemented and are effective.

D.3.17.4 Audit deficiencies. All audit deficiencies shall be conveyed to the responsible individual for corrective action(s). All corrective actions shall be agreed to by the management representative. A procedure shall be established to follow up on all audit deficiencies to assure that the corrective actions have been implemented in a timely manner. If recurrent deficiencies are found, additional corrective action shall be taken to assure correction of the problem and the qualifying activity shall be notified. The internal audit team shall perform a follow-up within 6 months for verification of corrective actions and to assure that they are adequate.

D.3.18 Training.

D.3.18.1 Personnel performing quality operations. All personnel performing an operation affecting quality shall be trained in, and familiar with, that part of the operation relevant to their function. They shall have sufficient responsibility and authority to inspect and accept or reject the product according to the applicable specifications.

D.3.18.2 Training requirements. Work training practices shall be established and utilized in acquiring and maintaining job skills as required in critical work areas.

D.3.19 Servicing. The manufacturer's system shall describe the methods used to meet customer expectations. This includes but is not limited to: Applications support, customer returns, stock rotation, GIDEP issuance, warranty issues, and customer complaints.

D.3.20 Statistical techniques.

D.3.20.1 SPC program. The method used for process control may or may not utilize SPC, but will use a method that is appropriate for the process being controlled..

Custodians:
Army – CR
Navy - EC
Air Force – 19
DLA - CC
NASA - NA

Review activities:
Air Force - 85

Preparing activity:
DLA - CC

(Project 59GP-2011-002)

NOTE: The activities listed above were interested in this document as of the date of this document. Since organizations and responsibilities can change, you should verify the currency of the information above using ASSIST Online database at https://assist.daps.dla.mil.