INCH-POUND
MIL-PRF-94G
w/Amendment 2
22 September 2015
SUPERSEDING
MIL-PRF-94G
w/Amendment 1
17 August 2011

PERFORMANCE SPECIFICATION

RESISTOR, VARIABLE, COMPOSITION
GENERAL SPECIFICATION FOR

This specification is approved for use by all Departments
and Agencies of the Department of Defense.

1. SCOPE

1.1 Scope. This specification covers the variable resistors having a composition resistance element shaped in an arc, and a contact bearing uniformly thereon, so that a change in resistance is produced between the terminal of the contact and the terminal of either end of the resistance element when the operating shaft is turned. These resistors are capable of full load operation (where maximum resistance is engaged) at a maximum ambient temperature of 70°C and are capable for continuous operation when properly derated, at a maximum temperature of 120°C (see 6.9).

1.2 Classification.

1.2.1 Part or Identifying number (PIN). The PIN is in the following form and as specified (see 3.1 and 6.2):

RV2	N	A	Y	SD	103	A
Style (1.2.1.1)	Bushing (1.2.1.2)	Switch (1.2.1.3)	Temperature and moisture resistance characteristic (1.2.1.4)	Operating shaft (1.2.1.5)	Resistance (1.2.1.6)	Resistance characteristic (1.2.1.7)

1.2.1.1 Style. The style is identified by the two letter symbol “RV” followed by a one digit number. The letters identify composition, variable resistors and the number identifies the size and power rating.

1.2.1.2 Bushing. The type of bushing is identified by a single letter in accordance with table I.

TABLE I. Bushing.

Symbol	Bushing
N	Standard
L	Locking
S	Shaft and panel sealed (standard)
T	Shaft and panel sealed (locking)

Comments, suggestions, or questions on this document should be addressed to DLA Land and Maritime, ATTN: VAT, Post Office Box 3990, Columbus, OH 43218-3990, or emailed to Resistor@dla.mil. Since contact information can change, you may want to verify the currency of this address information using the ASSIST Online database at https://assist.dla.mil.

1.2.1.3 Switch. The type of switch or absence of a switch is identified by a single letter in accordance with table II.

TABLE II. Switch.

Symbol	Switch
A	No switch
B	Single pole, single throw switch which is actuated to the "on" position at the start of the clockwise rotation

1.2.1.4 Temperature and moisture-resistance characteristic. The temperature and moisture resistance characteristic is identified by a single letter in accordance with table III.

TABLE III. Temperature and moisture resistance characteristic.

Symbol	Maximum ambient operating temperature	Maximum ambient temperature at rated wattage	Allowable change in total resistance due to moisture resistance (see 4.7.10)	Insulation resistance
Y	120°C	70°C	10 percent (maximum)	100 megohms

1.2.1.5 Operating shaft. The operating shaft styles and lengths are identified by a two digit symbol. The first letter indicates operating shaft in accordance with table IV, and the second letter indicates operating shaft length, as specified (see 3.1).

TABLE IV. Style of operating shaft.

Symbol	Shaft
F	Flatted
S	Slotted

1.2.1.6 Resistance. The nominal resistance value expressed in ohms is identified by a three digit number. The first two digits represent significant figures and the last specified the number of zeros to follow.

1.2.1.7 Resistance characteristic. The resistance characteristic is identified by a single letter in accordance with table V.

TABLE V. Resistance characteristic.

Symbol	Resistance taper (see figures 3 and 4)	Resistance tolerance (in percent)
A	A	±10
B	A	±20
C	C	±10
D	C	±20
E	F	±10
F	F	±20

1.2.1.8 Example of PIN. The PIN RV2NAYSD103A signifies.

RV2	-	A composition, variable resistor of the dimensions and power rating specified (see 3.1).
N	-	Standard bushing.
A	-	No switch.
Y	-	Temperature and moisture resistance characteristic as specified in table III.
SD	-	Slotted shaft 0.875 inches long.
103	-	Nominal total resistance of 10,000 ohms.
A	-	Linear taper with resistance tolerance of ±10 percent.

2. APPLICABLE DOCUMENTS

2.1 General. The documents listed in this section are specified in sections 3 and 4 of this specification. This section does not include documents cited in other sections of this specification or recommended for additional information or as examples. While every effort has been made to ensure the completeness of this list, document users are cautioned that they must meet all specified requirements documents cited in sections 3 and 4 of this specification, whether or not they are listed.

2.2 Government documents.

DEPARTMENT OF DEFENSE STANDARDS

MIL-STD-202	-	Test Methods Standard Electronics and Electrical Components Parts.
MIL-STD-810	-	Environmental Engineering Considerations and Laboratory Tests.

(Copies of these documents are available online at http://quicksearch.dla.mil).

2.3 Non-Government publications. The following documents form a part of this document to the extent specified herein. Unless otherwise specified, the issues of the documents cited in the solicitation or contract (see 6.2).

AMERICAN NATIONAL STANDARDS (ANS)

J-STD-006	-	Requirements for Electronic Grade Solder Alloys and Fluxed and Non-Fluxed Solid Solders for Electronic Soldering Applications

(DoD activities may obtain copies of American National Standard J-STD-006 from the Standardization Document Order Desk. Private sector and other Government agencies may purchases copies from the Institute for Interconnecting and Packaging Electronic Circuits (IPC) http://www.ipc.org/, 7380 N. Lincoln, Lincolnwood, IL 60646).

INTERNATIONAL ORGANIZATION for STANDARDS (ISO)

ISO 10012	-	Measurement Management Systems - Requirements for Measurement Processes and Measuring Equipment

(Copies of this document are available online at http://www.iso.org/or should be addressed to the American National Standards Institute, 11 West 42nd Street New York, NY 10036.)

NATIONAL CONFERENCE OF STANDARDS LABORATORIES (NCSL)

NCSL Z540-3	-	Laboratories, Calibration, and Measuring and Test Equipment.

(Copies of this document are available from http://www.ncsli.org/or from the National Conference of Standards Laboratories (NCSL) International, 1800 30th Street, Suite 305, Boulder, CO 80301-1026.)

2.4 Order of precedence. In the event of a conflict between the text of this document and the references cited herein, the text of this document takes precedence. Nothing in this document, however, supersedes applicable laws and regulations unless a specific exemption has been obtained.

3. REQUIREMENTS.

3.1 Associated specifications. The individual part requirements shall be as specified herein and in accordance with the applicable associated specifications. In the event of a conflict between requirements of this specification and the associated specifications, the latter shall govern (see 6.2).

3.2 Qualification. Resistors furnished under this specification shall be products which are qualified for listing on the applicable qualified product list (QPL) before contract award (see 4.4 and 6.3).

3.3 Materials. Materials shall be used which will enable the resistors to meet the performance requirements of this specification. Acceptance or approval of any constituent material shall not be construed as a guaranty of the acceptance of the finished product.

3.4 Interface and physical dimensions. The resistors shall meet the interface and physical dimensions specified (see 3.1).

3.4.1 Operating shaft. All operating shafts shall be of metal construction.

3.4.1.1 Size. The diameter and length of the operating shaft shall be as specified (see 3.1).

3.4.1.2 Style of operating shaft.

3.4.1.2.1 Slotted operating shaft. In no case shall the slots of slotted shafts be deep enough to interfere with shaft retainers or bearing surfaces. The slot shall be so positioned that the longitudinal centerline of the slot is within ±10 degrees of the longitudinal centerline of the contact area (see 3.1).

3.4.1.2.2 Flatted operating shaft. When flattened operating shaft are specified, the flattened portion shall be as specified in 3.1 and shall be as shown on figure 1. For shafts of D length, the flatted surface shall start 0.031 (0.79 mm) inches ±0.005 inches (0.13 mm) from the retaining ring and extended to the free end of the operating shaft (see 3.1).

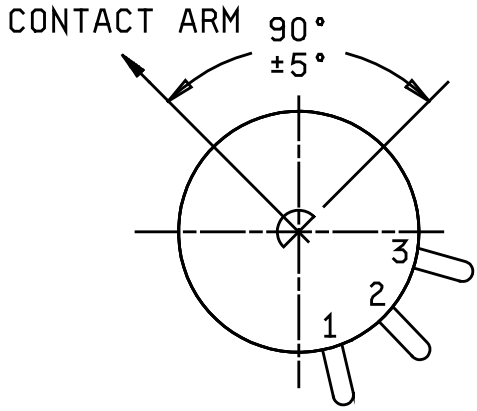

FIGURE 1. Position of flatted surface of flatted operation shaft.

3.4.2 Rotation. The total mechanical rotation and electrical rotation shall be defined on figure 2. The electrical rotation of resistors with switches shall be equal to the rotation from stop at the end opposite the switch to the point where members engaged to actuate the switch to the “off” position.

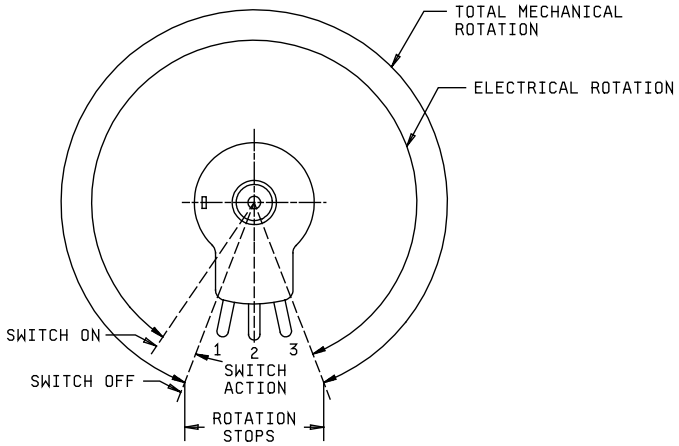

FIGURE 2. Definition or rotation (shaft end view).

3.4.2.1 Clockwise taper. A clockwise taper is a resistance taper in which the resistance varies approximately as shown on figure 3, increasing as the rotation angle increases in a clockwise direction as viewed from the operating shaft, and measured between the terminals indicated as 1 and 2 on figure 2.

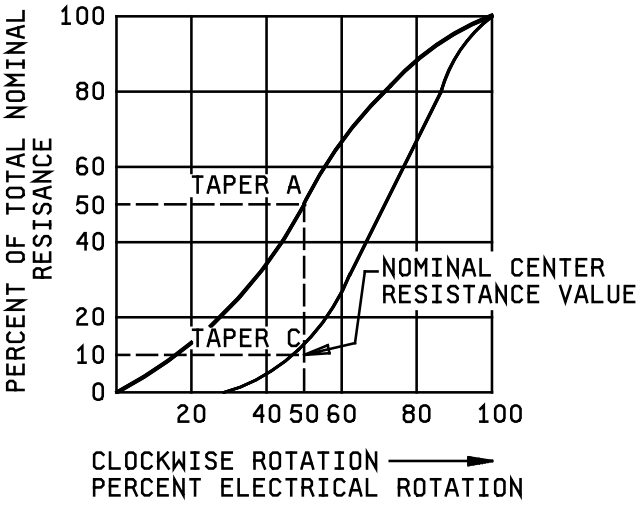

FIGURE 3. Clockwise taper.

3.4.2.2 Counterclockwise taper. A counterclockwise taper is a resistance taper in which the resistance varies approximately as shown in figure 4, increasing as the rotation angle increases in a counterclockwise direction as viewed from the operating shaft, and measured between terminals indicated as 3 and 2 on figure 2.

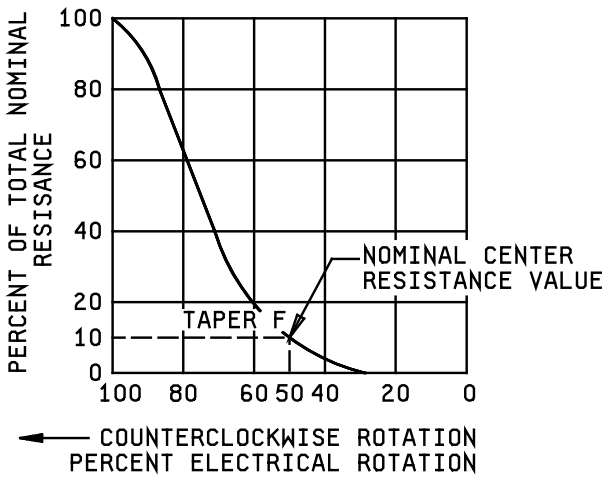

FIGURE 4. Counterclockwise taper.

3.4.3 Contact arm assembly. Contact pressure on the resistance element shall be maintained uniformly by positive pressure and shall be such as to permit smooth electrical and mechanical control of the resistor over the entire range of electrical rotation (see figure 2). The rotating contact shall have continuous electrical contact with its terminal throughout the entire electrical rotation and shall be insulated from the rotating operating shaft and the resistor housing. The entire contact arm assembly shall be sufficiently sturdy to preclude the necessity of adjustment during the life of the resistor.

3.4.3.1 Stops. Stops employed to limit the mechanical rotation of the contact arm assembly may be part of, but not complete any electrical circuit.

3.4.4 Terminals. Resistors and attached switches shall be supplied with external terminal lugs or terminal loops of such size and styles as to permit accommodating and soldering of three 0.032 inch (0.81 mm) diameter (AWG size 22, stranded) wires for resistors with 0.250 inch (6.35 mm) diameter operating shaft, and three 0.025 inch (0.64 mm) diameter (AWG 22, solid) wires for resistors with 0.125 inch (3.18 mm) diameter operating shafts. Terminals shall be treated to facilitate soldering.

3.4.4.1 Solder dip (retinning) lead. The manufacturer may solder dip/retin the leads of the product supplied to this specification provided the solder dip process has been approved by the qualifying activity. See appendix A,

3.4.5 Solder. Solder for electrical connections shall be in accordance with J-STD-006.

3.4.6 Mounting. Resistors shall be mounted by the single hole method with previsions for the nonturn device as specified (see 3.1).

3.4.6.1 Hardware. Each resistor shall be furnished with a corrosion resistant, internal tooth lock washer, a hexagonal mounting nut and a lock washer (if applicable), as specified (see 3.1). Hardware shall not be assembled on the resistor unless otherwise specified (see 6.2d). For direct Government orders, hardware shall be assembled on the resistor.

3.4.6.2 Standard bushings. When standard bushings are specified, the bushing shall be as shown for the applicable style of resistor (see 3.1).

3.4.6.3 Locking bushings. When locking bushing are specified, the bushing shall be as shown for the applicable style of resistor (see 3.1).

3.4.6.4 Shaft and panel seal bushings. When shaft and panel seated bushings are specified, the panel seal may be an integral part of the resistor or may be detachable (see 3.1).

3.4.6.5 Nonturn device. A nonturn device shall be furnished on resistors, which will prevent their rotation with respect to the surface on which they are mounted. The location of the nonturn device and its widest dimension shall be as specified (see 3.1). If the nonturn device is not symmetrical about its vertical axis, it shall be so placed that a plane passes perpendicular to the widest dimension and through its center shall pass through the axis of the operating shaft, and shall be an integral part of the resistor or permanently attached thereto.

3.4.7 Securing of screws, nuts, and threaded parts. All screw-thread assemblies shall be made resistant to loosening under vibration.

3.4.8 Enclosure. Resistors shall have enclosures for protection against mechanical damage.

3.5 DC resistance (see 4.7.2).

3.5.1 Resistance value deviations. All maximum deviations as specified in this section are to be considered absolute limits with the exception of the contact resistance adjustments.

3.5.2 Total resistance. Resistors shall have a total resistance equal to the nominal resistance value plus or minus the resistance tolerance specified (see 1.2.1.6, 1.2.1.7, and 4.7.2.1).

3.5.3 Resistance taper. A linear taper is one having constant change or resistance with angular rotation. The resistance taper shall conform in general shape to the normal curves shown in figure 3 and figure 4, as applicable. Resistance measurements shall fall within ±20 percent of the nominal values shown by curves at the specified angle of 50 percent of electrical rotation (see figures 3 and 4, and 4.7.2.2).

3.5.4 Minimum resistance (see 4.7.2.3).

3.5.4.1 Taper A (linear) resistors. The minimum resistance at either extreme of the electrical rotation shall not exceed the values listed in table VI.

TABLE VI. Minimum resistance taper (taper A).

Total resistance			Maximum value of minimum resistance
ohms			ohms
50	to	750 incl	5 1/
1,000	to	10,000 incl	25
15,000	to	50,000 incl	35
75,000	to	0.1 megohm	50
Megohms			
0.15	to	0.25 incl	125
0.35	to	0.50 incl	250
0.75	to	1.00 incl	500
1.50	to	2.50 incl	1,000
3.50	to	5.00 incl	1,500

1/ Applicable to all styles except RV6. For values of RV6, see 3.1.

3.5.4.2 Tapers C and F (nonlinear) resistors. The minimum resistance shall not exceed the values listed in table VII.

TABLE VII. Minimum resistance (tapers C and F).

Total resistance	Clockwise maximum value of minimum resistance (measured between 3 and 2 terminals, see figure 1) (ohms).		Counterclockwise maximum value of minimum resistance (measured between 1 and 2 terminals, see figure 1) (ohms).	
	Taper C	Taper F	Taper C	Taper F
ohms				
100 to 750 incl	20	5 1/	5 1/	20
1,000 to 5,000 incl	100	25	25	100
7,500 to 10,000 incl	200	25	25	200
15,000 to 25,000 incl	250	35	35	250
35,000 to 50,000 incl	500	35	35	500
75,000 to 0.1 megohm	1,000	35	35	1,000
Megohms				
0.15 to 0.25 incl	2,500	50	50	2,500
0.35 to 0.50 incl	5,000	100	100	5,000
0.75 to 1.00 incl	10,000	200	200	10,000
1.50 to 2.50 incl	25,000	500	500	25,000
3.50 to 5.00 incl	50,000	600	600	50,000

1/ Applicable to all styles except RV6. For value of RV6, see 3.1

3.6 Torque (see 4.7.3).

3.6.1 Operating. The torque required to rotate the contact arm shall be as specified (see 3.1). An additional torque of 15 ounce-inches shall be permitted for operation of attached switches.

3.6.2 Stops. Resistors shall withstand the stop torque specified (see 3.1) without damage to the contact arm and stop.

3.6.3 Locking. Resistors with locking bushings shall withstand the locking torque specified (see 3.1) without damage to the bushings and threads. The contact arm shall not move when subjected to the test specified in 4.7.3.3.

3.7 Dielectric withstanding voltage. When resistors are tested as specified in 4.7.4, resistors or switches, as required, shall withstand the application of potentials without damage, arcing, or breakdown.

3.8 Solderability. When resistors are tested as specified in 4.7.5, resistors shall meet the criteria for tab evaluation in the test method.

3.9 Resistance to soldering heat. When resistors are tested as specified in 4.7.6, resistors shall show no evidence of mechanical damage and the change in resistance shall not exceed 2 percent.

3.10 Rotational life. When resistors are tested as specified in 4.7.7, the permanent change in resistance shall not exceed 10 percent, nor shall proper contact between the resistance element and the contact arm be broken during or as a result of the test, and shall show no evidence of mechanical damage.

3.11 Switch life. Switches shall show no evidence of damage when they make, carry, and break the current as specified in 4.7.8. The contact resistance shall not exceed 0.10 ohm.

3.12 Load life. When resistors are tested as specified in 4.7.9, resistors shall show no evidence of mechanical damage and the change in total resistance between the initial reading and any subsequent reading shall not exceed 10 percent. The minimum resistance both before and after the test shall not exceed the applicable requirements for minimum resistance in tables VI and VII, as applicable (see 3.5.3).

3.13 Moisture resistance. When resistors are tested as specified in 4.7.10, resistors shall show no evidence of mechanical damage. The maximum change in total resistance of any individual resistor shall not exceed the value specified in table III. The resistors shall meet the insulation resistance requirement specified in table III and shall withstand application of the dielectric potential (see 4.7.4) without damage, arcing, or breakdown.

3.14 Low temperature storage. When resistors are tested as specified in 4.7.11, the total resistance shall not change in excess of 2 percent.

3.15 Low temperature operation. When resistors are tested as specified in 4.7.12, the torque required to effect rotation of the contact arm shall not be greater than 30 ounce-inches for all styles except RV4 and 48 ounce-inches for style RV4. The total resistance shall not change in excess of 3 percent.

3.16 Thermal shock. When resistors are tested as specified in 4.7.13, resistor shall show no evidence of mechanical damage and electrical continuity shall not be affected. Rivets, in any, shall not loosen, and the change in total resistance of each resistor shall not exceed the values specified (see 3.1).

3.17 Salt Atmosphere (corrosion). When resistors are tested as specified in 4.7.14, resistors shall show no corrosion and shall remain mechanically operative.

3.18 Shock (specified pulse). When resistors are tested as specified in 4.7.15, there shall be no open circuits or intermittent contacts. The resistance shall not change in excess of 5 percent between terminals 1 and 2 and 2 percent between terminals 1 and 3. There shall be no evidence of mechanical damage.

3.19 Vibration, high frequency. When resistance are tested as specified in 4.7.16, there shall be no open circuits or intermittent contacts. The resistance shall not change in excess of 5 percent between terminals 1 and 2 and 2 percent between terminals 1 and 3. There shall be no evidence of mechanical damage.

3.20 Fungus. All external materials shall be nonnutrient to fungus growth or shall be treated to retard fungus growth. The manufacturers shall certify that all external materials are fungus resistant or shall perform the test specified in 4.7.17. There shall be no evidence of fungus growth on the external surface as a result of the test.

3.21 Immersion (MIL-PRF-94/7 (RV8) only). When resistors are tested as specified in 4.7.18, no more than four bubbles shall be emitted.

3.22 Resistance to solvents (MIL-PRF-94/7 (RV8) only). When resistors are tested as specified in 4.7.19, there shall be no evidence of mechanical damage and the marking shall remain legible.

3.23 Pure tin. The use of pure tin, as an underplate or final finish, is prohibited both internally and externally. Tin content of resistor components and solder shall not exceed 97 percent, by mass. Tin shall be alloyed with a minimum of 3 percent lead, by mass (see 6.4 and appendix A).

3.24 Soldering. When soldering is employed, only substantially noncorrosive fluxes shall be used, unless it can be shown that corrosive elements have been satisfactorily removed after soldering. Solder shall not be used primarily for obtaining mechanical strength. Electrical connections shall be mechanically secure before and electrically continuous after soldering.

3.25 Marking. Resistors shall be permanently marked with the PIN and manufacturer's name and or trademark. If space permits, the resistance value shall also be marked. The PIN shall be marked on either the rear or the periphery of the resistors. There shall be no space between symbols which comprise the PIN. If lack of space requires it, the PIN may be set in two lines. In this event, the PIN shall be divided between the document number and the dash number as shown in the following example:

RV2NAY
SD103A

3.26 Recycled, recovered, environmentally preferable, or biobased materials. Recycled, recovered, environmentally preferable, or biobased materials should be used to the maximum extent possible, provided that the material meets or exceeds the operational and maintenance requirements, and promotes economically advantageous life cycle costs.

3.27 Workmanship. Resistors shall be processed in such a manner as to be uniform in quality and shall be free of any defects that will affect life, serviceability or appearance

4. VERIFICATION

4.1 Classification of inspections. The inspection requirements specified herein are classified as follows:

a. Qualification inspection (see 4.4).

b. Conformance inspection (see 4.6).

4.2 Test equipment and inspection facilities. The manufacturer shall establish and maintain a calibration system in accordance with NCSL Z540.3, ISO 10012, or equivalent system as approved by the qualifying activity.

4.3 Inspection conditions and precautions.

4.3.1 Inspection conditions. Unless otherwise specified herein, all inspections shall be in accordance with the test conditions specified in the "GENERAL REQUIREMENTS" of MIL-STD-202.

4.3.2 Precautions. Adequate precautions shall be taken during inspection to prevent condensation of moisture on resistors (except during the moisture resistance test). Precautions shall also be taken to prevent damage by heat when soldering resistor leads to terminals.

4.4 Qualification. Qualification inspection shall be performed at a laboratory acceptable to the Government (see 6.3) on sample units produced with equipment and procedures normally used in production.

4.4.1 Sample size. The number of sample units comprising a sample of resistors to be subjected for qualification inspection shall be as specified in the appendix A to this specification.

4.4.2 Inspection routine.

4.4.2.1 Single type submission. The sample shall be subjected to the examination and tests specified in table VIII, in order shown. Six sample units shall be subjected to the examination and tests of group I. An additional six sample units shall be subjected to group II. All sample units, except those subjected to group II, shall then be placed in a dry oven and maintained for 24 hours ±4 hours at a temperature of $40^{\circ}C \pm 5^{\circ}C$, then removed and placed in a desiccator using a desiccant, such as activated alumina or silica gel, before being subjected to the tests of group III to VIII, inclusive. The six sample units subjected to the examination and tests of group I shall also be subjected to the tests of group III. Twenty-four of the remaining sample units shall be equally divided into four groups and subjected to the tests of group IV to VII, inclusive. Ten sample units shall be subjected to tests of group VIII. Ten units shall be submitted to group IX (see 3.20).

4.4.2.2 Combined type submission. The sample shall be subjected to the examination and tests specified in table VIII and table IX, as applicable, in the order shown. The sample units shall be assigned to groups in accordance with table A-I or table A-II, as applicable. After examination and tests of group I and II, all resistors, except those subjected to group II shall be placed in a dry oven and maintained for 24 hours ±4 hours at temperature of 40°C ±5°C, then removed and placed in a desiccator using a suitable desiccant, such as activated alumina or silica gel, before being subjected to the tests of group III to VIII, inclusive, of table A-I or groups II or III, of table A-II, as applicable. Ten sample units shall be submitted to group IX.

TABLE VIII. Qualification inspection.

Examination or test	Requirement Paragraph	Method paragraph	Number of failures allowed 1/
Group I			0
Visual and mechanical examination 2/	3.1, 3.3 to 3.4.4 inclusive, 3.4.5 to 3.4.8 inclusive, 3.20 to 3.22 inclusive and 3.24 to 3.27 inclusive.	4.7.1	
DC resistance	3.5	4.7.2	
Torque	3.6	4.7.3	
Dielectric withstanding voltage	3.7	4.7.4	
Group 1A 3/			1
Immersion	3.21	4.7.18	
Resistance to solvents	3.22	4.7.19	
Group II			1
Solderability 4/	3.8	4.7.5	
Group III			
Resistance to soldering heat	3.9	4.7.6	
Rotational life	3.10	4.7.7	
Switch life 5/	3.11	4.7.8	
Group IV			
Load life	3.12	4.7.9	
Group V			0
Moisture resistance	3.13	4.7.10	
Group VI			
Low temperature storage	3.14	4.7.11	
Low temperature operation	3.15	4.7.12	
Thermal shock	3.16	4.7.13	
Group VII			
Salt atmosphere (corrosion)	3.17	4.7.14	
Group VIII			
Shock (specified pulse)	3.18	4.7.15	
Vibration, high frequency	3.19	4.7.16	
Group IX			
Fungus	3.20	4.7.17	

1/ Failure of a resistor in one or more tests of a group shall be charged as a single defective.
2/ Marking shall be considered defective only if the marking is illegible.
3/ Applicable only to MIL-PRF-94/7 (RV8) (see 3.1).
4/ Sample units subjected to group II shall not have been subjected to group I.
5/ Not applicable to locking bushings type resistors.

TABLE IX. Qualification inspection for locking bushing type resistors. 1/

Examination or test	Requirement paragraph	Method paragraph	Number of failures allowed 2/
Group I			
Visual and mechanical examination 3/	3.1, 3.3 to 3.4.4 inclusive, 3.4.5 to 3.4.8 inclusive, 3.20 to 3.22 inclusive and 3.24 to 3.27 inclusive	4.7.1	0
DC resistance	3.5	4.7.2	
Torque	3.6	4.7.3	
Group II			
Moisture resistance	3.13	4.7.10	1
Group III			
Rotational life	3.10	4.7.7	

1/ This inspection is applicable only to 12 additional locking bushing type resistors when submitted with the standard bushing type.
2/ Failures of an individual resistor in one or more tests of a group shall be charged as a single defective.
3/ Marking shall be considered defective only if marking is illegible.

4.4.3 Defective. Failure of a resistor in one or more tests of a group shall be charged as a single failure. One failure shall be allowed for groups I, II, III, and IV combined. No failures shall be allowed for groups V, VI and VII. Failures in excess of those allowed shall be cause for refusal to grant qualification.

4.5 Retention of qualification. Every 6 months, the manufacturer shall compile a summary of the results of conformance inspections in the form of a retention of qualification report, and forward it to the qualifying activity within 30 days from the end of the reporting period as the basis of continued qualification approval. In addition, the manufacturer shall immediately notify the qualified activity whenever the group B inspection data indicates failure of the qualified product to meet the requirements of the specification. Continuation shall be based on the evidence that over a 6-month period, the following has been met:

a. The manufacturer has not modified the design of the item.

b. The specification requirements for the item have not been amended to affect the character of the item.

c. Lot rejection for group A inspection does not exceed the group A sampling plan.

d. The requirements for group B inspections are met.

When group B requirements are not met and the manufacturer has taken corrective action satisfactory to the Government, group B retesting shall be instituted.

4.6 Conformance inspection.

4.6.1 Inspection of product for delivery. Inspection of product for delivery shall consist of groups A and group B inspections.

4.6.1.1 Inspection and production lot.

4.6.1.1.1 Inspection lot. An Inspection lot, as far as practicable, shall consist of all resistors of the same style (regardless of resistance value), produced in a period not to exceed 30 days, produced under essentially the same conditions, and offered for inspection at one time.

4.6.1.1.2 Production lot. A production lot shall consist of all resistors of the same style, nominal resistance value, and resistance tolerance. Manufacture of all parts in the lot shall have been started, processed, assembled, and tested as a group. Lot identity shall be maintained throughout the manufacturing process.

4.6.1.2 Group A Inspection. Group A inspection shall consist of the examination and tests specified in table X, and shall be made on the same set of sample units, in the order shown.

TABLE X. Group A inspection.

Examination or test	Requirement paragraph	Method paragraph	Sampling plan
Subgroup 1 Total resistance	3.5.1	4.7.2.1	See 4.6.1.2.1.1
Subgroup 2 Visual and mechanical examination	3.1, 3.3 to 3.4.4 inclusive, 3.4.5 to 3.4.8 inclusive, 3.20 to 3.22 inclusive and 3.24 to 3.27 inclusive	4.7.1	See 4.6.1.2.1.2
Subgroup 3 Solderability	3.8	4.7.5	See 4.6.1.2.1.3

4.6.1.2.1 Sampling plan.

4.6.1.2.1.1 Subgroup 1. A sample of parts from each inspection lot shall be randomly selected in accordance with table XI. If one or more defects are found, the lot shall be reworked or screened and defectives removed. After reworking or screening of the lot and removal of defectives, a new sample of parts shall be randomly selected in accordance with table XI. If one or more defects are found in this second sample, the lot shall be rejected and shall not be supplied to the specification. Resistance values in the samples shall be representative, and where possible, in proportion to the resistors in the inspection lot.

TABLE XI. Group A sampling plan.

Lot size	Subgroup 1 sampling plan	Subgroup 2 sampling plan
1 to 12	100 percent	100 percent
13 to 124	100 percent	13
125 to 191	125	13
192 to 280	192	20
281 to 500	192	29
501 to 1,200	192	34
1,201 to 3,200	192	42
3,201 to 10,000	192	50
10,001 to 35,000	294	60
35,001 to 150,000	294	74
150,001 to 500,000	345	90
500,001 and over	435	102

4.6.1.2.1.2 Subgroup 2. A sample of parts from each inspection lot shall be randomly selected in accordance with table XI. If one or more defects are found, the lot shall be reworked or screened and defectives removed. After reworking or screening of the lot and removal of defectives, a new sample of parts shall be randomly selected in accordance with table XI. If one or more defects are found in this second sample, the lot shall be rejected and shall not be supplied to the specification.

4.6.1.2.1.3 Subgroup 3 (solderability).

4.6.1.2.1.3.1 Sampling plan. Five samples (13 samples for RV8) shall be selected randomly from each inspection lot and subjected to the subgroup 3 solderability test. If one or more defects, the lot shall be considered to have failed.

4.6.1.2.1.3.2 Rejected lots. In the event of one or more defects, the inspection lot is rejected. The manufacturer may use one of the following options to rework the lot;

a. Each production lot that was used to form the failed inspection lot shall be individually submitted to the solderability test as required in 4.7.5. Five samples shall be selected from each production lot that formed the failed inspection lot. Production lots that pass the solderability test are available for shipment. Production lots failing the solderability test can be reworked only if submitted to the solder dip procedure in 4.6.1.2.1.3.2b.

b. The manufacturer submits the failed lot to a 100 percent solder dip using an approved solder dip process in accordance with the 3.4.4.1. Following the solder dip the electrical measurements required in group A, subgroup 2 tests shall be repeated on 100 percent of the lot. The Percent Defective Allowable (PDA) for the electrical measurements shall be as for the subgroup 1 tests. Five (13 samples of RV8) additional samples shall then be selected and subjected to the solderability test with zero defects allowed. If the lot fails the solderability test, the lot may be reworked and retested. If the lot fails a second rework, the lot shall be rejected and shall not be furnished against the requirements of this specification.

4.6.1.2.1.3.3 Disposition of samples. The solderability test is considered a destructive test and samples submitted to the solderability test shall not be supplied on the contract.

4.6.1.3 Group B inspection. Group B inspection shall consist of the tests specified in table XII, in the order shown, and the sample shall be selected from the inspection lots that have passed group A inspection.

TABLE XII. Group B inspection.

Examination or test	Requirement paragraph	Method paragraph
Resistance taper	3.5.2	4.7.2.2
Minimum resistance	3.5.3	4.7.2.3
Torque	3.6	4.7.3
Dielectric withstanding voltage	3.7	4.7.4

4.6.1.3.1 Sampling plan. A sample of parts from each inspection lot shall be randomly selected in accordance with table XIII, if one or more defects are found, the lot shall be rescreened and defects removed. After reworking or screening of the lot and removal of defectives, a new sample of parts shall be randomly selected in accordance with table XIII. If one or more defects are found in the second sample, the lot shall not be supplied to this specification.

4.6.1.3.2 Disposition of sample units. Sample units which have passed all the group B inspection may be delivered on the contract or purchase order, if the lot is accepted.

TABLE XIII. Group B sampling plan.

Lot size			Sample size
1	to	25	3
26	to	50	5
51	to	90	6
91	to	150	7
151	to	280	10
281	to	500	11
501	to	1,200	15
1,201	to	3,200	18
3,201	to	10,000	22
10,001	to	35,000	29
35,001 and over			29

4.7 Methods of examination and test.

4.7.1 Visual and mechanical examination. Resistors shall be examined to verify that the materials, design, construction, physical dimensions, marking, and workmanship are in accordance with the applicable requirements (see 3.3 to 3.4.4, 3.4.5 to 3.4.8, inclusive, and 3.20 to 3.22, inclusive).

4.7.2 DC resistance. Resistors shall be tested in accordance with method 303 of MIL-STD-202. The following details shall apply (see 3.5).

a. Measuring apparatus: Different types of measuring test equipment (multimeter, bridges, or equivalent) are permitted to be used on the initial and final readings of this test, provided the equipment is the same style and model, or it can be shown that the performance of the equipment is equivalent. The supplier shall establish and maintain a calibration system in accordance with NCSL Z540-3, ISO 10012, or equivalent system as approved by the qualifying activity.

b. Measurement energy for electronic test equipment: The measurement energy applied to the unit under test shall not exceed 10 percent of the 25°C rated wattage times 1 second.

c. Limit of error of measuring apparatus. Shall not exceed ±0.5 percent for qualification inspection nor ±1 percent for conformance inspection.

d. Test voltage for bridges: Measurements of resistance shall be made using the test voltage specified in table XIV. The test voltage chosen, whether it be the maximum or lower voltage which would still provide the sensitivity requires, shall be applied across the terminals of the resistor. This voltage shall be used whenever a subsequent measurement is made.

TABLE XIV. DC resistance test voltage.

Total resistance, nominal			Maximum test voltage
ohms			volts
100	to	999 incl	2
1,000	to	9,999 incl	4
10,000	to	99,999 incl	15
0.1 megohm and over			40

4.7.2.1 Total resistance. The total resistance of resistors shall be measured between the terminals of the resistance of element with the contact arm against either stop of taper A and against the stop at the low resistance end for tapers C and F. The resistance value obtained shall be compared with the specified nominal total resistance (see 3.5.1).

4.7.2.2 Resistance taper. Following the measurement of total resistance measurement shall be made at 50 percent of the electrical rotation. The contact arm may be varied ±3 percent of the total electrical rotation from the specified angle of 50 percent to meet the resistance tolerance of ±20 percent (see 3.5.2).

4.7.2.3 Minimum resistance. The contact arm shall be rotated to its extreme counterclockwise limit of mechanical rotation. With the arm in this position, the resistance between the counterclockwise terminal and the rotating contact terminal shall be measured. The contact arm shall then be rotated to its extreme clockwise limit of mechanical rotation. With the arm in this position, the resistance between the clockwise terminal and the rotating contact terminal shall be measured (with the switch "on") at the exact point where the shaft actuator makes contact with the switch actuator (see 3.5.3).

4.7.3 Torque. (see 3.6).

4.7.3.1 Operating. The torque required to rotate the contact arm of the resistance element shall be determined throughout the entire range of mechanical rotation by the torque wrench method or by any other method satisfactory to the Government.

4.7.3.2 Stop. Resistors shall be mounted on a metal panel by their normal mounting means. The contact arm shall then be rotated to each extreme limit of mechanical rotation and the specified torque (see 3.1) applied through the operating shaft to the stops.

4.7.3.3 Locking. Resistors shall be mounted on a metal panel by their normal mounting means and the locking device tightened with a torque wrench not greater than that specified (see 3.1).

4.7.4 Dielectric withstanding voltage (see 3.7).

4.7.4.1 Atmospheric pressure. Resistors shall be tested in accordance with method 301 of MIL-STD-202. The following details and exceptions shall apply:

a. Special preparation: Resistors shall be mounted on metal plates of sufficient size to extend beyond the resistor extremities, and such a manner that measurements can be made between terminals tied together and any other external metal parts.

b. Magnitude of test voltage: 900 volts root mean square (rms) (for resistor styles RV6, 750 volts rms).

c. Nature of potential: From alternating current (ac) supply at commercial line frequency and waveform.

d. Points of application of test voltage: Between the resistor terminals tied together and all external metal portions of the resistors and metal mounting plate.

e. Examination after test: During the tests, the leakage current shall be monitored and the resistors examined for evidence of arcing and breakdown. At the conclusion of the test, resistors shall be examined for evidence of damage.

4.7.4.2 Barometric pressure. Resistors shall be tested in accordance with method 105 of MIL-STD-202. The following details and exceptions shall apply:

a. Method of mounting: As specified in 4.7.4.1a.

b. Test condition B.

c. Period of time at reduced pressure prior to application of potential: 1 minute.

d. Tests during subjection to reduced pressure: Voltage as specified (see 3.1) form an ac supply at commercial line frequency and waveform shall be applied for 1 minute.

e. Points of application: As specified in 4.7.4.1d.

f. Examination and measurement: As specified in 4.7.4.1e.

4.7.5 Solderability. Resistors shall be tested in accordance with method 208 of MIL-STD-202. The following details shall apply (see 3.8):

a. All three terminals shall be tested.

b. No special preparation of leads is required.

c. Steam aging shall apply.

d. Terminals shall be dipped within 0.125 inch (3.18 mm) of body. All three terminals shall be dipped simultaneously whenever possible. When configuration is such that terminals cannot be dipped simultaneously, the 0.125 inch (3.18 mm) shall apply to the terminal on which ever it occurs when all three terminals are dipped in an orientation which mostly meets the above requirement.

e. Evaluation for tab terminals shall apply.

4.7.6 Resistance to soldering heat. Resistors shall be tested in accordance with method 210 of MIL-STD-202. The following details shall apply (see 3.9):

a. Measurement before test: DC resistance shall be measured as specified.

b. The temperature of the solder shall be $350^{O}C \pm 10^{O}C$, and the duration of immersion shall be 5 seconds ± 0.5 seconds.

c. Depth of immersion in the molten solder: To a point 0.125 inch (3.18 mm) from the entry of the terminal into the resistor body for resistor with a 0.250 inch (6.35 mm) diameter operating shaft and 0.0625 inch (1.59 mm) for resistors with a 0.125 inch (3.18 mm) diameter shaft.

d. Measurement after test: 4 hours ± 0.5 hours after completion of test, the dc resistance shall be measured as specified in 4.7.2. Resistors shall be examined for evidence of mechanical damage.

4.7.7 Rotational life. Resistors shall be placed in a dry oven maintained at a temperature of 40°C ±5°C, for a period of 24 hours ±4 hours. Following the removal from the oven, resistors shall be rotated 25 times to remove any film, if any, under the contact arm. The total resistance of each resistor shall be measured. Resistor shafts shall be continuously oscillated through not less than 90 percent of the total mechanical rotation at a rate of approximately 10 cycles per minutes, for a total of 25,000 cycles. The locking type resistors shall be rotated only 500 cycles. The rate of rotation for conformance inspection shall be 10 cycles to 50 cycles per minute. Taper A resistors shall be ganged in pairs and the resistors in each pair shall be connected in series so that a nominally constant current flows through the resistors irrespective of the contact arm positioning during the rotation of the shaft as shown in figure 5. Care shall be taken to insure that side thrust is minimized by proper alignment of the resistor shafts with the drive shafts. When performing this test on locking bushing type resistors, the locking nut shall be removed. The shafts shall be so connected mechanically that they turn simultaneously in the same direction. The potential applied during this test shall be obtained from a dc power supply and shall be rated at the continuous working voltage of the resistor (see 3.1). Resistors shall be monitored to ascertain that proper contact is made during and throughout the course of the test. No potential shall be applied to tapers C and F resistors. Total resistance shall be measured at the end of cycling. At the conclusion of this test, resistors shall again be placed in a dry oven maintained at 40°C for 24 hours ±4 hours. Following removal from the oven, the total resistance shall again be measured and the percentage of change in resistance from the initial measurement shall be computed (see 3.10).

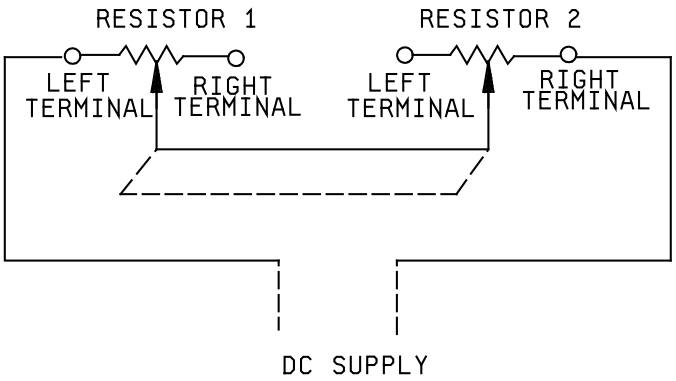

FIGURE 5. Rotational life test circuit.

4.7.8 Switch life (not applicable to locking bushing type resistors). A 3.0 ampere current, slowing through a carbon lamp or a wire-wound resistor load with an ac, rms potential of 117 volts ±10 percent applied, shall be interrupted 5,000 times by the operation of the switch. Switch contact resistance shall be measured both before and after the test (see 3.11). This test may be conducted concurrently with the rotational load life test specified in 4.7.7.

4.7.9 Load life. Resistors shall be tested in accordance with method 108 of MIL-STD-202. The following details and exceptions shall apply (see 3.12):

a. Method of mounting: Resistors shall be mounted by their bushings with terminals positioned downward, in the center of a vertical No. 16 gauge, steel panel, 4 inches square in still air. Still air is surrounding air with no circulation other than that created by the heat of the resistor being operated. No shielding shall be located closer than 12 inches from the panel.

b. Test temperature and tolerance: 70°C ±5°C

c. Initial measurement: Minimum resistance at 25°C +10°C, -5°C (see 4.7.2.3). Following this measurement, the ambient temperature shall be held at the test temperature for 24 hours ±4 hours without load. At the end of this period, total resistance shall be measured. This measurement shall be the initial test measurement that shall be used as a reference for all future measurements of total resistance.

d. Operation conditions: Rated dc continuous working voltage as specified in (see 3.1), shall be applied intermittently 1.5 hours "on" and 0.5 hours "off" for a total of 1,000 hours through the contact arm located against either stop and one resistance element terminal for taper A, and against the stop at the low end and one resistance element for tapers C and F, so that the rated wattage is dissipated across the entire element. Adequate precautions shall be taken to maintain constant voltage on resistors under test.

e. Test condition : D.

f. Measurements during test: Resistance measurements shall be made at the end of the 0.5 hour off periods after 100 hours ±8 hours, 200 hours ±8 hours, 500 hours +48 hours, -0 hours have elapsed and compare to the similar readings taken in 4.7.9c.

g. Measurements after the test: The resistors shall be returned to an ambient temperature of 25°C +10°C, -5°C, and the minimum resistance shall be measured within not less than 2 hours nor more than 4 hours.

4.7.10 Moisture resistance. Resistors shall be tested in accordance with method 106 of MIL-STD-202. The following details and exceptions shall apply (see 3.13):

a. Mounting: Resistors shall be mounted by their bushings on a metal panel with the operating shaft in a horizontal position and the radial terminals pointed downward. Vibration shall be performed either in a vertical or horizontal plane.

b. Initial measurements: Total resistance shall be measured between terminal 1 and the contact arm terminal with the operating shaft rotated to the maximum clockwise position (see figure 2).

c. During steps 1 and 4, rated (100 percent) wattage or maximum rated dc voltage, whichever is smaller, shall be applied for the first 2 hours of each step.

d. Method of applying load voltage: Across terminal 1 and the contact arm terminal, with operating shaft rotated to the maximum clockwise position (see figure 2).

e. Final measurements: At the end of the final cycle and while the resistors are still in the humidity chamber at the high humidity condition, total resistance shall be measured as specified in 4.7.10b. above. Following this measurement, the humidity chamber may be opened in order to make the necessary electrical connections to perform the dielectric withstanding voltage (see 4.7.4) and the insulation resistance shall be specified in table III. The chamber shall then be returned to the high humidity condition and maintained at this condition for at least 1 hour prior to these test. Dielectric withstanding voltage shall be tested as specified in 4.7.4.1 except that the operating shaft shall not be rotated during the test, electrification time shall be 2 minutes, and then test potential applied to styles RV5 and RV6 shall be 500 volts. Insulation resistance shall then be measured between the resistor terminals tied together and mounting bushing, using a dc potential of 500 volts. The subsequent 4 hour to 24 hour conditioning period and measurements do not apply.

4.7.11 Low temperature storage. The total resistance shall be measured at 25°C +10°C, -5°C. Within 1 hour after this measurement, resistors shall be placed in a chamber at a temperature of 25°C +10°C, -5°C. The temperature in this chamber shall be lowered to -63°C +0°C, -2^{O}C within a minimum period of 3 hours. Twenty four hours after the resistors have reached this temperature, the temperature of the chamber shall be gradually raised to 25°C +10°C, -5°C within a maximum period of 8 hours. Resistors shall then be removed from the chamber and maintained at 25°C +10°C, -0°C for a period of approximately 24 hours, after which the total resistance shall be measured (see 3.14).

4.7.12 Low temperature operation. The resistors shall be measured at 25°C, +10°C, -5°C. The resistors shall then be placed in a chamber at 25°C, +10°C, -5°C and the temperature in the chamber shall be lowered to -55°C +0°C, -5°C with a minimum period of 1.5 hours. After 1 hour ±15 minutes of stabilization at this low temperature, rated continuous working voltage (see 3.1), shall be applied for 45 minutes across the resistance element between one end terminal and the contact arm. The resistors shall then be allowed to stabilize for 1 hour ±15 minutes and the torque necessary to effect rotation of the contact arm shall be measured. Following this measurement, the temperature shall be gradually raised to 25°C +10°C, -5°C within a period of 8 hours. The resistance shall then be removed from the chamber and maintained at 25°C +10°C, -5°C for approximately 24 hours, after which the total resistance shall be measured (see 3.15).

4.7.13 Thermal shock. (see 3.16).

4.7.13.1 Mounting. Resistors shall be mounted by their mounting bushings in such a manner that there is at least one (1) inch of free air space around each resistor, and with the mounting in such a position with respect to the air stream that it offers the least obstruction to the flow of the air across and around the resistors.

4.7.13.2 Cycling. Sample units shall be conditioned at 70°C ±5°C for 24 hours ±4 hours. The sample unit shall be returned to room ambient (25°C ±5°C) an allowed to stabilize. After stabilization, the initial resistance reading shall be taken. The sample units shall then be subjected to applicable thermal shock shown in table XV for a total of five cycles performed continuously. In transferring the sample units from one chamber to another, they shall not be subjected to circulating air. The air temperature of the two chambers shall be held at each of the extreme temperatures by means of circulation and sufficient hot or cold chamber capacity so that air at the sample units will reach the temperature specified within 2 minutes after they have been transferred to the appropriate chamber. The final resistance reading shall be taken at the end of thermal shock at 25°C ±5°C after the samples have been stabilized.

TABLE XV. Thermal shock.

Steps	Temperature (°C)	Time in minutes (minimum)
1	-55 +0, -3	30
2	25 +10, -5	10 to 15
3	120 +3, -0	30
4	25 +10, -5	10 to 15

NOTE: At the option of the manufacturer the reverse sequence may be as follows:
1. Room Temperature
2. +120°C ±3°C
3. Room temperature
4. -55°C ±3°C

4.7.14 Salt Atmosphere (corrosion). Resistors shall be tested in accordance with method 101 of MIL-STD-202. The following details shall apply (see 3.17):

a. Special mounting: On an aluminum panel.

b. Test condition: A.

c. Examination after exposure: Resistors shall be thoroughly washed for 1 minute in free-running tap water, the temperature of which shall not exceed 38°C. The resistors shall then be placed in an oven maintained at 50°C ±3°C, for a period of 24 hours ±4 hours. At the end of this period, resistors shall be removed from the oven, disassembled, and examined for corrosion of internal surfaces.

4.7.15 Shock (specified pulse). Resistors shall be tested in accordance with method 213 of MIL-STD-202. The following details and exception shall apply (see 3.18):

a. Special mounting means: Resistors shall be mounted by their normal mounting means on an appropriate mounting fixture. A suggested mounting fixture is shown in figure 6. The mounting fixture shall be constructed in such a manner as to insure that the mounting supports remain in a static condition with reference to the shock test table. Test leads used during this test shall be as small as a wire size as practicable (e.g., AWG 22 stranded) so the influence of the test lead on the resistor will be held to a minimum. The test lead length shall be no longer than necessary. In all cases, the resistor shall be mounted in relation to the test equipment in such a manner that the stress applied is in the direction which would be considered most detrimental. The contact arm shall be positioned at 50 percent of mechanical rotation. The locking bushing styles be in the locking position.

b. Measurements after mounting: Resistors shall be measured as specified in 4.7.2. The resistance shall be measured between the contact arm terminal and terminal 1 and between terminals 1 and 3.

c. Test condition: I.

d. Motion: Resistors shall be subject to a total of 20 impacts (five blows in each of two directions in each of two mutually perpendicular planes). One of the test planes used shall be perpendicular and the other parallel to the longitudinal axis of the operating shaft.

e. Measurements during test: Each resistor shall be monitored to determine momentary discontinuity of the element, and between the contact arm and element, by a method which shall at least be sensitive enough to monitor or register automatically any momentary discontinuity having a duration of 0.1 millisecond (ms) or less, as well as those of greater duration.

f. Examinations after shock: Resistors shall be measured as specified in 4.7.2. The resistance shall be measured between the contact arm terminal and terminal 1, and between terminals 1 and 3. Resistors shall be examined for evidence of mechanical and electrical damage.

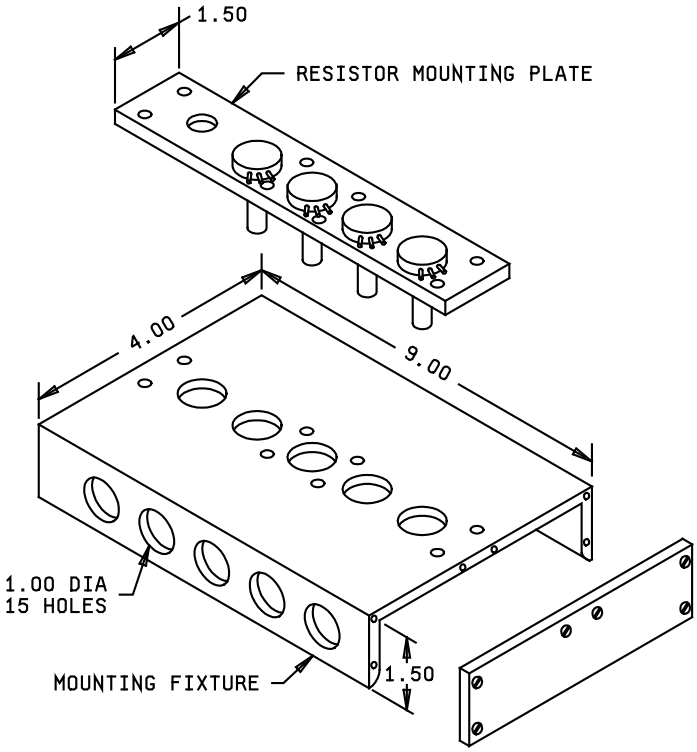

Inches	mm	Inches	mm
1.00	25.40	4.00	101.60
1.50	38.10	9.00	228.60

NOTES:
1. Dimensions are in inches. Metric equivalents are given for general information only
2. Tolerance is ±0.02 inch (0.51 mm).

FIGURE 6. Suggested mounting fixture and resistor mounting plate for shock and high frequency vibration tests.

4.7.16 Vibration, high frequency. Resistors shall be tested in accordance with method 204 of MIL-STD-202. The following details and exceptions shall apply (see 3.19):

a. Mounting: Resistors shall be mounted by their normal mounting means to an appropriate nonresonant mounting fixture. A suggested mounting fixture is shown in figure 6. The mounting fixture shall be constructed in a manner as to insure that the points of the resistor mounting supports shall have the same motion as the vibration test table. Test leads used during this test shall be as small as a wire size as practicable (e.g., AWG 22 stranded) so the influence of the test lead on the resistor will be held to a minimum. The test lead length shall be no longer than necessary. A shielded cable which may be necessary because of the field surrounding the vibration test table, shall be clamped to the mounting fixture. In all cases, resistors shall be mounted in relation to the test equipment in such a manner that the stress applied is in the direction which would be considered most detrimental. The contact arm shall be positioned at 50 percent of mechanical rotation. The locking bushing styles shall be in the locked position.

b. Measurements after mounting: Resistors shall be measured as specified in 4.7.2. The resistance shall be measured between the contact arm terminal and terminal 1 and between terminals 1 and 3.

c. Test condition: C, part 2.

d. Motion: In each of two mutually perpendicular directions, one perpendicular and the other parallel to the longitudinal axis of the resistor.

e. Measurements during test: Each resistor shall be monitored to determine momentary discontinuity of the element, and between the contact arm and element, by a method which shall at least be sensitive enough to monitor or register automatically any momentary discontinuity having a duration of 0.1 millisecond (ms) or less, as well as those of greater duration. A measurement of transient resistance change between the contact arm terminal and terminal 1 shall also be made.

f. Examinations after shock: Resistors shall be measured as specified in 4.7.2. The resistance shall be measured between the contact arm terminal and terminal 1, and between terminals 1 and 3. Resistors shall be examined for evidence of mechanical and electrical damage.

4.7.17 Fungus. Resistors shall be tested in accordance with method 508 of MIL-STD-810. Resistors shall be examined for evidence of mechanical damage (see 3.20).

4.7.18 Immersion (MIL-PRF-94/7 (RV8) only). Resistors shall be immersed for 1 minute ±5 seconds in water at $85^{O}C$ $+5^{O}C$, $-0^{O}C$ (see 3.21).

4.7.19 Resistance to solvents (MIL-PRF-94/7 (RV8) only). Resistors shall be tested in accordance with method 215 of MIL-STD-202 (see 3.22).

5. PACKAGING.

5.1 Packaging. For acquisition purposes, the packaging requirements shall be as specified in the contract or order (see 6.2). When packaging of materiel is to be performed by DoD or in-house contractor personnel, these personnel need to contact the responsible packaging activity to ascertain packaging requirements. Packaging requirements are maintained by the Inventory Control Point's packaging activity within the Military Service or Defense Agency, or within the military services system commands. Packaging data retrieval is available from the managing Military Department's or Defense Agency's automated packaging files, CD-ROM products, or by contacting the responsible packaging activity.

6. NOTES

(This section contains information of a general or explanatory nature that may be helpful, but is not mandatory).

6.1 Intended use. The resistors covered by this specification are military unique due to the fact that these devices must be able to operate satisfactorily in military systems under the following demanding conditions: 15 g's of high frequency vibration, 100 g's of shock (specified pulse), 25,000 cycles of endurance at the maximum temperature, thermal shock (with no more than 5 percent deviation in initial resistance), low temperature coefficient of resistance, and resistant to salt corrosion. In addition, these military requirements are verified under a qualification system. Commercial components are not designed to withstand these military environmental conditions.

6.2 Acquisition requirements. Acquisition documents must specify the following.

a. Title, number, and date of this specification, and the complete PIN (see 1.2).

b. Unless otherwise specified (see 2.1), the versions of the individual documents referenced will be those in effect on the date of release of the solicitation.

c. Packaging instructions (see 5.1).

d. Hardware, whether assembled on resistor (see 3.4.6.1).

6.3 Qualification. With respect to products requiring qualification, awards will be made only for products which are, at the time of award of contract, qualified for inclusion in Qualified Product List QPL 94 whether or not such products have actually been so listed by that date. The attention of the contractors is called to these requirements, and manufacturers are urged to arrange to have the products that they propose to offer to the Federal Government tested for qualification in order that they may be eligible to be awarded contracts or purchase orders for the products cover by this specification. The activity responsible for the QPL and, information pertaining to qualification of products may be obtained from the DLA Land and Maritime, ATTN: VQP, Post Office Box 3990, Columbus, OH 43218-3990. An online listing of products qualified to this specification may be found in the Qualified Products Database (QPD) at http://www.landandmaritime.dla.mil/Programs/QmlQpl/.

6.4 Tin whisker growth. The use of alloys with tin content greater than 97 percent, by mass, may exhibit tin whisker growth problems after manufacture. Tin whiskers may occur anytime from a day to years after manufacture and can develop under typical operating conditions, on products that use such materials. Conformal coatings applied over top of a whisker-prone surface will not prevent the formation of tin whiskers. Alloys of 3 percent lead, by mass, have shown to inhibit the growth of tin whiskers. For additional information on this matter, refer to ASTM-B545 (Standard Specification for Electrodeposited Coatings of Tin).

6.5 Supplementary insulation. Resistors should not be used at potentials to ground greater than a peak voltage of 500 volts, or 200 volts for aircraft equipment, unless supplementary insulation is provided.

6.6 Soldering. Care should be taken in soldering resistors, since all properties of a composition resistor may be seriously affected when soldering irons are applied to terminals for too long.

6.7 Hum pickup. Design engineers confronted with the problems of hum pickup by resistors from attached switches in any particular application should specify separate switches at an appropriate distance from the resistor.

6.8 Shaft locking device. Locking devices are commercially available which may be readily attached to any standard bushing type resistor covered by this specification. These locking devices permit any degree of torque from normal to complete locking of the operating shaft of the resistor. The locking bushing type resistor specified herein provides the shaft locking feature without additional equipment.

6.9 Derating. If it is desired to operate these resistors at ambient temperature greater than 70°C. The resistor should be derated in accordance with figure 7.

6.10 Transient change in resistance. It is suggested that when these resistors encounter shock and high frequency vibration forces of the magnitudes enumerated in this specification, that they be used only in applications where a 10 percent vibration can be tolerated in the resistance at the contact area.

6.11 Shock and vibration, high frequency. Suggested mounting fixture is shown in figure 6.

6.12 Temperature characteristic. The temperature characteristic will change an average of ±8 percent due to thermal cycling.

6.13 Acceleration. The acceleration test was deleted from this specification because the thermal shock and vibration tests will show any defects that the acceleration test would have accomplished.

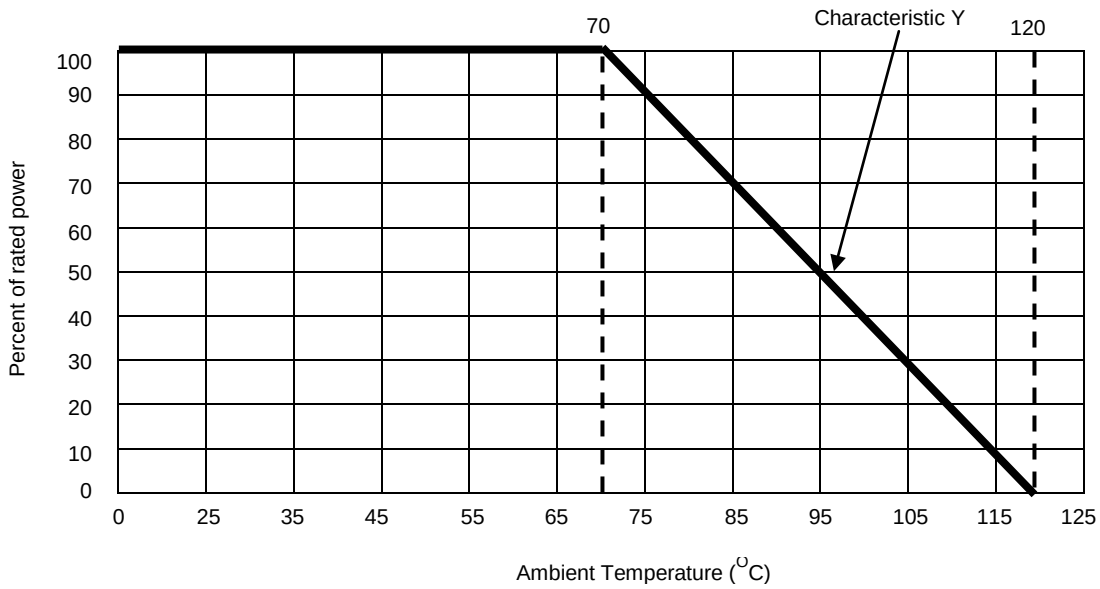

FIGURE 7. Derating curve for continuous duty.

6.14 Selection and use information. Equipment designers should refer to MIL-HDBK-199, “Resistors, Selection and Use of” for the selection of standard resistor types and values for new equipment designs. Application and use information concerning these resistors is also provided in MIL-HDBK-199 and table XVI.

6.15 Supersession data. Slotted shafts, identified by model “S” is used for replacement of flatted shafts identified by symbol ”F”. For military replacement purposes, resistors with resistance characteristics identified by symbols “A”, “C”, and “E” is used for replacement of resistors with resistance characteristics identified by symbols “B”, “D”, and “F”. Suppression of styles and other characteristics is as specified in table XVII

6.16 Retinning leads. If retinning (hot solder dip) of the leads is required (see Appendix A, Section 5).

6.17 Subject (key word) listing.

Potentiometer
Taper
Resistance element shaped in an arc
Operating shaft
Switch

TABLE XVI. Performance requirements.

Style	RV2	RV4	RV5	RV6	RV7		RV8
Maximum ambient temperature at rated wattage (see figure 7)	70°C						
Maximum ambient temperature at zero rated wattage derating (see figure 7)	120°C						
Power rating in watts					panel	rear	
Taper A (see 3.5.4.1)	1.0	2.0	0.5	0.5	-	-	0.5
Tapers C and F (see 3.5.4.2)	0.5	1.0	0.25	0.25	0-2.0	1.6-0	0.25
Maximum percent change in resistance							
Rotation life (see 3.10)	10						
Load life (see 3.12)	10						
Moisture resistance (see 3.13)	10 max						
Low temperature storage (see 3.14)	2						
Low temperature operation (see 3.15)	3						
Thermal shock (see 3.16)	6	4	6	4			
Shock (specified pulse) (see 3.18)	2						
Vibration, high frequency (see 3.19)	2						
Insulation resistance (after moisture resistance, see 3.13)	100 megohms						
Resistance tolerance ± percent (see table V)	10 and 20						

TABLE XVII. Styles and characteristics.

Style and characteristics in MIL-R-94	Supersedes style and characteristic in MIL-R-94C	Supersedes styles and characteristics in MIL-R-94B
RV2Y	RV2Y	RV2 characteristic X and Y
RV4Y	RV4Y	RV4 characteristic X and Y
RV5Y	RV5Y	RV5 characteristic X and Y
RV6Y	RV6Y	RV1 and RV6 characteristic X and Y

6.18 Environmentally preferable material. Environmentally preferable materials should be used to the maximum extent possible to meet the requirements of this specification. As of the dating of this document, the U.S. Environmental Protection Agency (EPA) is focusing efforts on reducing 31 priority chemicals. The list of chemicals and additional information is available on their website http://www.epa.gov/osw/hazard/wastemin/priority.htm. Use of these materials should be minimized or eliminated unless needed to meet the requirements specified herein (see Section 3).

6.19 Amendment notification. The margins of this specification are marked with vertical lines to indicate modification generated by this amendment. This was done as a convenience only and the Government assumes no liability whatsoever for any inaccuracies in these notations. Bidders and contractors are cautioned to evaluate the requirements of this document based on the entire content irrespective of the marginal notations and relationship.

APPENDIX A

PROCEDURE FOR QUALIFICATION INSPECTION

A.1. SCOPE

A.1.1 Scope. This appendix details the procedure for submission of samples, with related data, for qualification inspection of category I resistors covered by this specification. The procedure for extending qualification of the required sample to other resistors covered by this specification is also outlined herein. This appendix is a mandatory part of this specification. The information contained herein is intended for compliance only.

A.2 APPLICABLE DOCUMENTS

A.2.1 Government documents.

A.2.1.1 Specifications, standards, and handbooks. The following specifications, standards, and handbooks form a part of this document to the extent specified herein. Unless otherwise specified, the issues of these documents are those cited in the solicitation (see 6.2).

DEPARTMENT OF DEFENSE STANDARDS

MIL-STD-1276 - Leads, for Electronic Components Parts.

(Copies of these documents are available online at http://quicksearch.dla.mil).

A.2.2 Order of precedence. In event of a conflict between the text of this document and the references cited herein (except for related associated specifications, specification sheets, or MS sheets), the text of this document takes precedence. Nothing in this document, however, supersedes applicable laws and regulations unless a specific exemption has been obtained.

A.3. SUBMISSION

A.3.1 Sample

A.3.1.1 Single type submission. A sample consisting of 56 sample units of each type for which qualification is sought shall be submitted in accordance with table A-I. All sample units shall have 0.875 inch (22.23 mm) shaft lengths.

A.3.1.2 Combined type submission. For qualification of either the standard bushing or the locking bushing type resistors, a sample consisting of the number of sample units specified in table A-I shall be submitted in each style and moisture resistance characteristic for which qualification is sought. To receive qualification of locking bushing type resistors when standard bushing type resistors have been submitted, an additional sample of locking bushing type resistors shall be submitted. This sample shall consist of the number of sample units specified in table A-II and shall have a resistance value equal to the critical value as specified in table A-III. All sample units shall have 0.875 inch (22.23 mm) shaft lengths.

A.3.2. Test results. Each submission shall be accompanied by test results covering the nondestructive tests listed in table VIII or IX which have been performed on the submitted sample units. The performance of the destructive tests by the supplier on a duplicate set of sample units is encouraged, although not required. All test results shall be submitted in duplicate. Qualification of the switch in any style will qualify switches in all other styles. Approval of resistors with slotted shafts shall be the basis for approval of flatted shafts. Approval of flatted shafts will be basis for approval of slotted shafts.

APPENDIX A

TABLE A-I. Requirements for qualification sample.

Lot		1	2	3	4 1/	5
Number of samples to be submitted (see 3.1)		56	6	12	12	56
Total resistance		Lowest 2/	10,000 ohms	Critical value 3/	Critical value 3/	Highest 2/
Switch		None	None	None	SPST	None
Taper		A	C or F	A	A	A
Groups (see table VIII) and sample units number	I / IA	1 to 6	1 to 6	1 to 6	1 to 6	1 to 6
	II	7 to 12				7 to 12
	III	1 to 6	1 to 6		1 to 6	1 to 6
	IV	13 to 18		1 to 6		13 to 18
	V	19 to 24		13 to 18	13 to 18	19 to 24
	VI	25 to 30				25 to 30
	VII	31 t0 36				31 t0 36
	VIII	37 to 46				37 to 46
	IX 4/	47 to 56				47 to 56

1/ If lot 4 is not submitted, 24 sample units shall be submitted for lot 3. Six of the additional sample units shall be subjected to the test of group III and the remaining 6 to the tests of group VI.
2/ For which qualification is sought.
3/ See Table A-III.
4/ Manufacturers can provide certification that resistors are fungus free or shall test resistor.

TABLE A-II. Samples for qualification of additional locking bushing types.

Number of sample units in the same style to be submitted (see A.3.1.2)	Groups (see table IX) and sample units number		
	I	II	III
12	1 to 12	1 to 6	7 to 12

TABLE A-III. Critical resistance value.

Style	Resistance (in megohms)
RV5	0.10
RV6	0.25
RV2	0.10
RV4	0.10

A.3.3 Certification of material. When submitting samples for qualification, the supplier shall submit certification, in duplicate, that the materials used in the components are in accordance with the applicable specification requirements.

A.3.4 Description of items. The supplier shall submit a detailed description of the resistors being submitted for inspection, including case material, element type, contact type, and method of fastening of terminals to base and element.

A.4. EXTENT OF QUALIFICATION.

A.4.1 Single type submission. Qualification shall be for the type submitted.

A.4.2 Combined type submission. Qualification within a style and characteristic shall be shown in table A-IV. Qualification of resistors with standard (N) type bushings shall qualify resistors with sealed (S) type bushings. Conversely, qualification of resistors with sealed (S) type bushing shall qualify resistors with standard (N) type bushing. Qualification of resistors with locking (L) type bushing shall qualify resistors with sealed (T) type bushings. Conversely, qualification of resistors with sealed (T) type bushing shall qualify resistors with Locking (L) type bushing.

A.5. SOLDER DIP (RETINNING) LEADS

A.5.1 Solder dip (retinning) leads. The manufacturer (or his authorized category B or C distributor) may solder dip/retin the leads of product supplied to this specification provided the solder dip process (A.5.2 of this appendix) or an equivalent processes that has been approved by the qualifying activity.

A.5.2 Qualifying Activity Approval. Approval of the solder dip process will be based on one of the following options:

a. When the original lead finish qualified was hot solder dip lead finish 52 of MIL-STD-1276 (Note: The 200 microinch maximum thickness is not applicable). The manufacturer shall use the same solder dip process for retinning as is used in the original manufacture of the product.

b. When the lead originally qualified was not hot solder dip lead finish 52 of MIL-STD-1276 as prescribed in A.5.2a, approval for the process to be used for solder dip shall be based on the following test procedure:

(1) Thirty samples of any resistance value for each style and lead finish are subjected to the manufacturer's solder dip process. Following the solder dip process, the resistors are subjected to the dc resistance test (and other group A electricals). No defects are allowed.

(2) Ten of the 30 samples are then subjected to the solderability test. No defects are allowed.

(3) The remaining 20 samples are subjected to the resistance to solder heat test followed by the moisture resistance test (or hermetic seal test if the device is hermetically sealed). No defects are allowed.

(Note: Solder dip of gold plated leads is not allowed).

A.5.3 Solder dip/retinning options. The manufacturer (or authorized category B or C distributor) may solder dip/retin as follows:

a. After the 100 percent group A screening tests. Following the solder dip/retinning process, the electrical measurements required in group A, subgroup 1, test shall be repeated on the lot. Group A, subgroup 1, lot rejection criteria shall be used. Following these tests, the manufacturer shall submit the lot to the group B solderability test as specified in 4.7.5.

b. As a corrective action, if the lot fails the group A solderability test, the lot may be retinned no more than two times. The lot after retinning shall be 100 percent screened for group A electrical requirements (dc resistance) and parts failing (lot not exceeding PDA for group A, subgroup 1, see (4.6.1.2.1.1) these screens shall be supplied to this specification, if electrical failures are detected after the second retinning operation exceeding 1 percent of the lot shall not be supplied to this specification.

c. After the group A inspection has been completed: Following the solder dip/retinning process, the electrical measurements required in group A, subgroup 1, 100 percent screening test shall be repeated on 100 percent of the lot. The PDA for the electrical measurements shall be as for the subgroup 1 tests. Following these tests, the manufacturer shall submit the lot to the group A solderability test as specified in 4.7.5.

APPENDIX A

TABLE A-IV. Extent of qualification.

Lots passed	
1, 2, 3, 4, 5	All resistance values between the highest and lowest values submitted, all tapers, with or without switches
1, 2, 3, 4	All resistance values between the lowest value submitted and critical value, all tapers, with or without switches
1, 2, 3, 5 1/	All resistance values between the highest and lowest values submitted, all tapers, without switches
1, 2, 4, 5	No qualification
1, 3, 4, 5	All resistance values between the highest and lowest values submitted, taper A only, with or without switches
2, 3, 4, 5	All resistance values between the critical value and highest value submitted, all tapers, with or without switches
1, 2, 3, 1/	Lowest value submitted to the critical value, all tapers, without switches
1, 2, 4	No qualification
1, 2, 5	No qualification
1, 3, 4	All resistance values between the lowest value submitted and critical values, taper A only, with or without switches
1, 3, 5 1/	All resistance values between the highest and lowest values submitted, taper A only, without switches
1, 4, 5	No qualification
2, 3, 4	No qualification
2, 3, 5 1/	All resistance values between the critical value submitted, all tapers, without switches
3, 4, 5	All resistance values between the critical value and highest value submitted, taper A only, with or without switches
1, 2	No qualification
1, 3 1/	All resistance values between the lowest value submitted and critical value, taper A only, without switches
1, 4,	No qualification
1, 5	No qualification
2, 3 or 2, 4	No qualification
2, 5	No qualification
3, 4	No qualification
3, 5	All resistance values between the critical value and highest value submitted, taper A only, without switches
1	No qualification
2, 3, or 4	No qualification
5	No qualification

1/ If only the switch fails, this statement applies, if resistor fails in lot 4, no qualification shall be granted.

Custodians:
Army - CR
Navy - EC
Air Force - 85
DLA - CC

Preparing activity:
DLA - CC

(Project 5905-2015-031)

Review activities:
Army - AR, AT, AV, CR4, MI
Navy - AS, MC, OS
Air Force - 19, 99

NOTE: The activities listed above were interested in this document as of the date of this document. Since organizations and responsibilities can change, you should verify the currency of the information above using the ASSIST Online database at https://assist.dla.mil.