INCH-POUND
MIL-PRF-914/4B
w/Amendment 4
10 November 2014
SUPERSEDING
MIL-PRF-914/4B
w/Amendment 3
5 February 2010

PERFORMANCE SPECIFICATION

RESISTOR NETWORK, FIXED, FILM, SURFACE MOUNT, 20-PIN, LEADLESS CHIP CARRIER, NONESTABLISHED RELIABILITY AND ESTABLISHED RELIABILITY, STYLE RNS040

This specification is approved for use by all Departments and Agencies of the Department of Defense.

The requirements for acquiring the product described herein shall consist of this specification sheet and MIL-PRF-914.

1. SCOPE

1.1 Scope. This specification covers the detail requirements for RNS040 resistor networks. Resistors covered by this specification are considered a monolithic design or wire bond and die construction. The established reliability (ER) and nonestablished reliability (non-ER) styles are available in all characteristics and resistance tolerances. Designers are CAUTIONED on using these resistors in pulse applications (see 6.6)

1.2 Part or Identifying Number (PIN). Resistor networks covered by this specification are identified by a pin which consists of the basic number of this specification and a coded number. The military PIN is in the following form:

M914G04	-	H1002FSS
Associated specification		Coded number

NOTE: The coded number is derived in accordance with MIL-PRF-914.

2. APPLICABLE DOCUMENTS

2.1 General. The documents listed in this section are specified in sections 3 and 4 of this specification. This section does not include documents cited in other sections of this specification or recommended for additional information or as examples. While every effort has been made to ensure the completeness of this list, document users are cautioned that they must meet all specified requirements documents cited in sections 3 and 4 of this specification, whether or not they are listed.

Comments, suggestions, or questions on this document should be addressed to Army Standardization Program Lead Engineering Operations Division (PRD), ATTN: CERDEC, Pod 153, Bldg. 6010, Aberdeen Proving Ground, MD 21005 or emailed to usarmy.APG.cerdec.mbx.standardization-crx@mail.mil. Since contact information can change, you may want to verify the currency of this address information using the ASSIST Online database at https://assist.dla.mil.

AMSC N/A FSC 5905

DISTRIBUTION STATEMENT A. Approved for public release; distribution is unlimited.

2.2 Government documents.

2.2.1 Specifications, standards, and handbooks. The following specifications, standards, and handbooks form a part of this document to the extent specified herein. Unless otherwise specified, the issues of these documents are those cited in the solicitation or contract (see 6.2).

DEPARTMENT OF DEFENSE SPECIFICATION

MIL-PRF-914	-	Resistor Networks, Fixed, Film, Surface Mount, Nonestablished Reliability and Established Reliability, General Specification for.

(Copies of these documents are available online at http://quicksearch.dla.mil)

2.3 Order of precedence. Unless otherwise noted herein or in the contract, in the event of a conflict between the text of this document and the references cited herein (except for related specification sheets), the text of this document takes precedence unless otherwise noted. Nothing in this document, however, supersedes applicable laws and regulations unless a specific exemption has been obtained.

3. REQUIREMENTS

3.1 General. The requirements for acquiring the product described herein shall consist of this document and MIL-PRF-914.

3.2 Design and construction. The resistor networks shall be of the design, construction, physical dimensions specified on figure 1.

3.3 Power rating. The power ratings for schematic P, schematic M, schematic E, and schematic S shall be as specified in table I.

TABLE I. Power ratings.

Schematics	Characteristics			
	K and M		C, R, H, and V	
	Element (watts)	Network (watts)	Element (watts)	Network (watts)
P	0.10	1.00	0.050	0.50
M	0.05	0.95	0.025	0.475
E	0.10	1.00	0.050	0.50
S	0.05	1.00	0.025	0.50

3.4 Power conditioning. The power applied for power conditioning for schematic P, schematic M, schematic E, and schematic S shall be one and one-half times rated power.

3.5 Temperature range. The operating temperature range shall be from -55°C to +125°C.

3.6 Voltage rating. The maximum voltage rating shall be 50 Vdc.

3.7 Resistance range. The resistance range shall be 10 ohms to 2.2 megohms.

3.8 Standard resistance values. The standard resistance values and the resistance designator for the "S" schematic are as specified in table II.

Configuration A

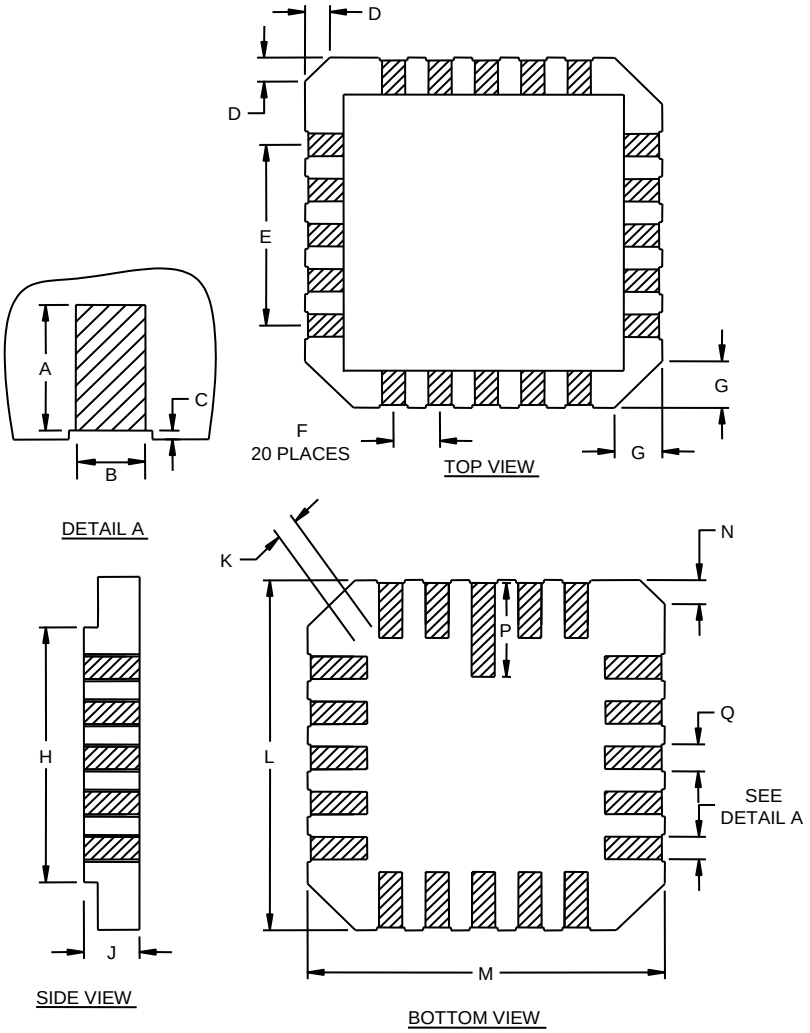

Ltr	Inches		Millimeters	
	Min	Max	Min	Max
A	0.037	0.053	0.94	1.35
B	0.022	0.028	0.56	0.71
C	0.000	0.010	0.00	0.25
D 1/	0.012	0.028	0.30	0.71
E	0.192	0.208	4.88	5.28
F	0.042	0.058	1.07	1.47
G 1/	0.032	0.048	0.81	1.22
H	0.280	0.300	7.11	7.62

Ltr	Inches		Millimeters	
	Min	Max	Min	Max
J	---	.050	---	0.13
K	0.015	---	0.38	---
L	0.342	0.358	8.69	9.09
M	0.342	0.358	8.69	9.09
N	0.012	0.028	0.30	0.71
P	0.072	0.088	1.83	2.24
Q	0.022	0.038	0.56	0.97

1/ Typical

FIGURE 1. Leadless chip carrier

Configuration B

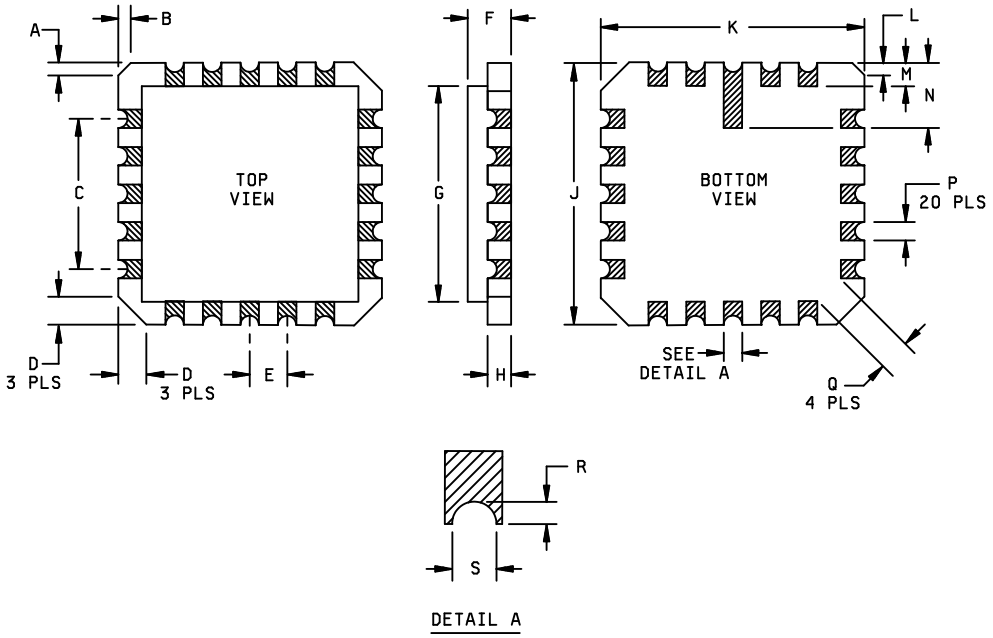

Ltr	Inches		Millimeters	
	Min	Max	Min	Max
A	.012	.028	0.30	0.71
B	.012	.028	0.30	0.71
C	.192	.208	4.88	5.28
D	.032	.048	0.81	1.22
E	.042	.058	1.07	1.47
F	---	.085	---	2.16
G	.280	.300	7.11	7.62
H	.015	.031	0.38	0.79
J	.342	.358	8.69	9.09

Ltr	Inches		Millimeters	
	Min	Max	Min	Max
K	.342	.358	8.69	9.09
L	.012	.028	0.30	0.71
M	.045	.055	1.14	1.40
N	.077	.093	1.96	2.36
P	.022	.028	0.56	0.71
Q	.015	---	0.38	---
R	.003	.010	0.08	0.25
S	.011	.022	0.28	0.56

FIGURE 2. Leadless chip carrier - Continued

Configuration C

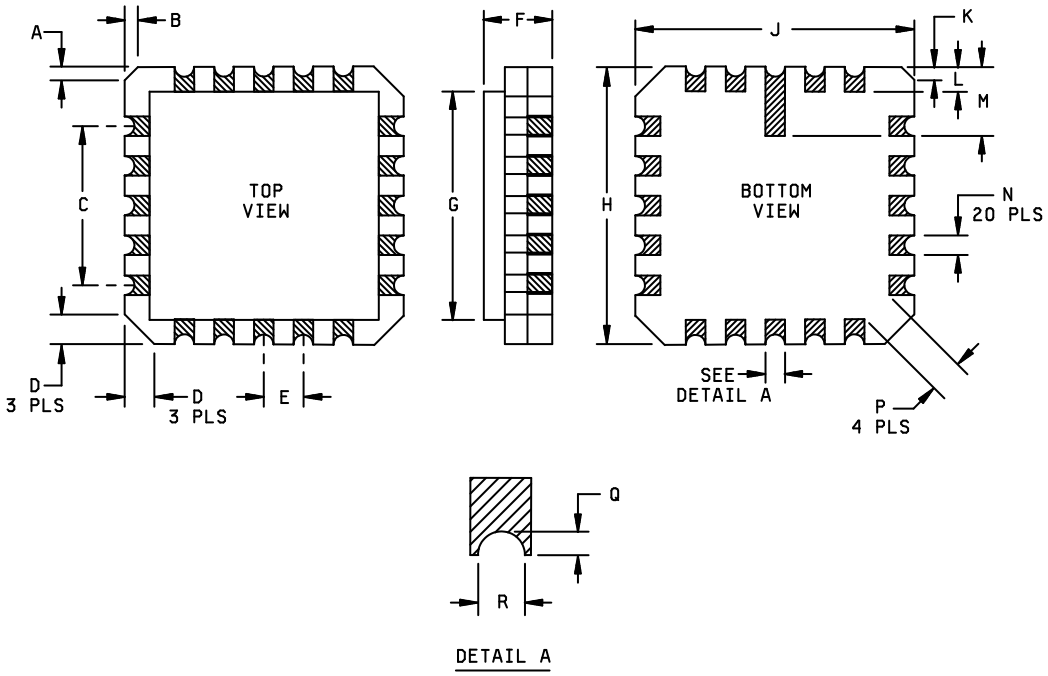

Ltr	Inches		Millimeters	
	Min	Max	Min	Max
A	.012	.028	0.30	0.71
B	.012	.028	0.30	0.71
C	.120	.208	3.05	5.28
D	.032	.048	0.81	1.22
E	.042	.058	1.07	1.47
F	---	.090		2.29
G 1/	---	.310		7.87
H	.342	.358	8.69	9.09

Ltr	Inches		Millimeters	
	Min	Max	Min	Max
J	.342	.358	8.69	9.09
K	.012	.028	0.30	0.71
L	.045	.055	1.14	1.40
M	.077	.093	1.96	2.36
N	.022	0.028	0.56	0.71
P	.015	---	0.38	
Q	.003	.010	0.08	0.25
R	.006	.022	0.15	0.56

NOTES:
1. Dimensions are in inches. Metric equivalents are given for general information only.
2. Unless otherwise specified, tolerances are ±.008 (0.20 mm).
3. Adjacent corner pads may be rounded or diagonal cut to meet the .015 (0.38 mm) minimum requirement.
4. Pin number 1 locator shall be a dot adjacent to pin number 1.
5. The picturization of the styles above is given as representative of the envelope of the item. Slight deviations from the outline shown, which are contained within the envelope and do not alter the functional aspect of the device, are acceptable.

FIGURE 1. Leadless chip carrier - Continued.

TABLE II. Standard resistance values.

Resistance designator	R1 (ohms)	R2 (ohms)	Resistance designator	R1 (ohms)	R2 (ohms)
A001	82	130	A010	330	470
A002	120	200	A011	330	680
A003	130	210	A012	1,500	3,300
A004	160	260	A013	3,000	6,200
A005	180	240	A014	180	270
A006	180	390	A015	270	270
A007	220	270	A016	560	560
A008	220	330	A017	560	1,200
A009	330	390	A018	620	2,700

3.9 Resistance tolerance. Resistors are available in (B) ±0.1 percent, (D) ±0.5 percent, (F) ±1.0 percent, (G) ±2 percent, and (J) ±5 percent resistance tolerances.

3.10 Marking. Due to the size limitations, this style resistor shall be marked with the following minimum information in the order shown:

042K - Date code, characteristic
10K0 - Coded resistance value
FEMJ - Tolerance, schematic, failure rate, JAN marking

3.11 Termination. Resistor terminations are available in following configurations.

Configuration	Termination
A	A, D, G
B	B, E, H
C	Z, W, T

3.12 Schematic. The schematic of the resistor network is identified by a single letter in accordance with figure 2. The resistor element R_{ref} is the reference resistor element used in determining the ratio accuracy (when applicable).

3.13 Pure tin. The use of pure tin, as an underplate or final finish, is prohibited both internally and externally. Tin content of resistor components and solder shall not exceed 97 percent, by mass. Tin shall be alloyed with a minimum of 3 percent lead, by mass (see 6.4).

4. VERIFICATION

4.1 Sampling and inspection. Sampling and inspection shall be in accordance with MIL-PRF-914.

4.2 "S" schematic tests. For tests on "S" schematic, the dc resistance measurements, resistance temperature characteristic measurement, and short time overload application shall be made between each terminal and applicable common terminal without compensation for the shunt circuits to determine the acceptability to section 3 requirements.

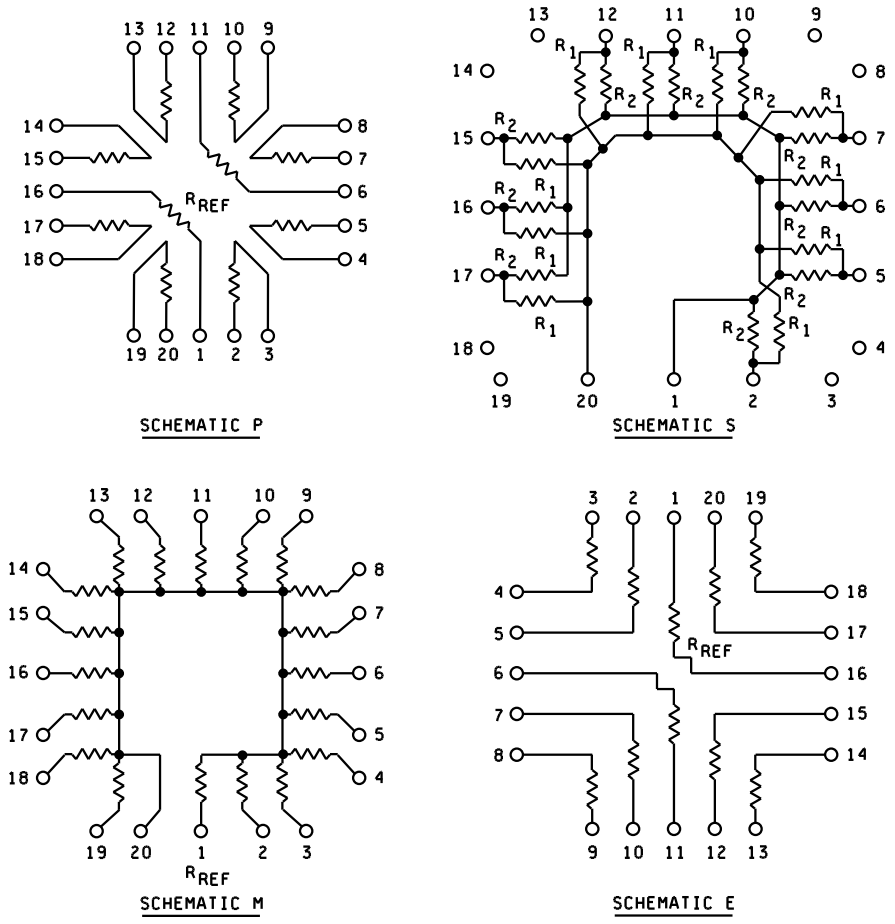

Figure 2. Schematics

5. PACKAGING.

5.1 Packaging. For acquisition purposes, the packaging requirements shall be as specified in the contract or order (see 6.2). When packaging of materiel is to be performed by DoD or in-house contractor personnel, these personnel need to contact the responsible packaging activity to ascertain packaging requirements. Packaging requirements are maintained by the Inventory Control Point's packaging activity within the Military Service or Defense Agency, or within the military services system commands. Packaging data retrieval is available from the managing Military Department's or Defense Agency's automated packaging files, CD-ROM products, or by contacting the responsible packaging activity.

6. NOTES

(This section contains information of a general nature that may be helpful, but is not mandatory.

6.1 Intended use. Resistor networks are used in surface mount applications where space is a major concern.

6.2 Acquisition requirements. Acquisition documents must specify the following:

a. Title, number, and date of the specification, and the complete PIN. (see 1.2)

b. Unless otherwise specified (see 2.1), the versions of the individual documents referenced will be those in effect on the date of release of the solicitation.

c. Packaging instructions (see 5.1) (e.g., Electrostatic discharge (ESD) sensitivity (see 6.5))

d. Allowable substitution.

6.3 Soldering. Extreme care should be taken when soldering these resistors. Prolonged exposure to high temperatures can damage these devices.

6.4 Tin whisker growth. The use of alloys with tin content greater than 97 percent, by mass, may exhibit tin whisker growth problems after manufacture. Tin whiskers may occur anytime from a day to years after manufacture and can develop under typical operating conditions, on products that use such materials. Conformal coatings applied over top of a whisker-prone surface will not prevent the formation of tin whiskers. Alloys of 3 percent lead, by mass, have shown to inhibit the growth of tin whiskers. For additional information on this matter, refer to ASTM-B545 (Standard Specification for Electrodeposited Coatings of Tin).

6.5 Electrostatic charge. Under several combinations of conditions, these resistors can be electrically damaged, by electrostatic charges, and drift from specified value. Users should consider this phenomena when ordering or shipping resistors. Direct shipment to the Government is controlled by MIL-DTL-39032 that specifies a preventive packaging procedure.

6.6 Pulse applications. Designers are CAUTIONED on using these resistors in pulse applications. These resistors only see a one time pulse (Short-time overload) as part of the group B inspection. These resistors are subject to damage and premature failures when they see excessive pulsing.

6.7 Subject term (key word) listing.

Monolithic design
Wire bond and die construction

6.8 Amendment notification. The margins of this specification are marked with vertical lines to indicate modification generated by this amendment. This was done as a convenience only and the Government assumes no liability whatsoever for any inaccuracies in these notations. Bidders and contractors are cautioned to evaluate the requirements of this document based on the entire content irrespective of the marginal notations and relationship.

Custodians:
Army - CR
Navy - EC
Air Force - 85
DLA - CC

Review activities:
Army - AR, AT, AV, CR4, MI
Navy - AS, CG, MC, OS
Air Force - 19
NASA - NA

Preparing activity:
Army - CR

Agent:
DLA - CC

(Project 5905-2014-031)

NOTE: The activities listed above were interested in this document as of the date of this document. Since organizations and responsibilities can change, you should verify the currency of the information above using the ASSIST Online database at https://assist.dla.mil.