INCH-POUND
MIL-PRF-914C
w/Amendment 2
10 November 2014
SUPERSEDING
MIL-PRF-914C
w/Amendment 1
1 December 2008

PERFORMANCE SPECIFICATION

RESISTOR NETWORK, FIXED, FILM, SURFACE MOUNT, NONESTABLISHED RELIABILITY, AND ESTABLISHED RELIABILITY, GENERAL SPECIFICATION FOR

This specification is approved for use by all Departments and Agencies of the Department of Defense.

1. SCOPE

1.1 Scope. This specification covers the general requirements for nonestablished reliability (non-ER) and established reliability (ER), hermetically sealed (see 3.27) and nonhermetically sealed networks (see 3.27.1). These networks consist entirely of fixed, film resistors. They are primarily intended for use in surface mount applications where space is a major concern. ER resistors covered by this specification will have life failure rates (FR) ranging from 1 percent to 0.001 percent per 1,000 hours (see 1.2.1.7). The ER FR are established at a minimum 60-percent confidence level on the basis of life tests. Designers are CAUTIONED on using these resistors in pulse applications (see 6.4.4).

1.2 Classification.

1.2.1 Part or Identifying Number (PIN). Networks specified herein (see 3.1) is identified by a PIN which is of the basic number of the associated specification and a coded number.

M914	A	01	H	1002	F	A	S
Specification number	Termination (1.2.1.2)	Associated specification	Characteristic (1.2.1.1)	Resistance (1.2.1.3 & 1.2.1.3.1)	Resistance Tolerance (1.2.1.4)	Schematic (1.2.1.5)	Product Level (1.2.1.7)

1.2.1.1 Characteristic. The characteristic is identified by the single letters C, H, K, M, R, or V in accordance with table I.

1.2.1.2 Termination. The termination material is identified by a single letter and will be as specified in table II.

Comments, suggestions, or questions on this document should be addressed to Army Standardization Program Lead Engineering Operations Division (PRD), ATTN: CERDEC, Pod 153, Bldg. 6010, Aberdeen Proving Ground, MD 21005 or emailed to usarmy.APG.cerdec.mbx.standardization-crx@mail.mil. Since contact information can change, you may want to verify the currency of this address information using the ASSIST Online database at https://assist.dla.mil.

AMSC N/A FSC 5905
DISTRIBUTION STATEMENT A. Approved for public release; distribution is unlimited.

TABLE I. Characteristics.

Test or condition		Characteristics						Units
		R	V	H	K	M	C 1/	
Resistance-temperature characteristic (see 3.13)		±25	±50	±50	±100	±300	±50	ppm/°C
Tracking to the reference element		±5		2/			±5	
Thermal shock (see 3.8) and Power conditioning (see 3.9)	ΔR	±.25		±.50	±.70		±.25	Maximum percent change in resistance (0.01 ohm additional allowed for measurement error). When applicable maximum percent change in resistance ratio.
	ΔRatio	±.03		3/			±.03	
Thermal shock (see 3.8)	ΔR	±.15		±.25	±.50		±.15	
	ΔRatio	±.03		3/			±.03	
Low temperature operation (see 3.14)	ΔR	±.10		±.10	±.25	±.50	±.10	
	ΔRatio	±.02		3/			±.02	
Short-time overload (see 3.15)	ΔR	±.10		±.10	±.25	±.50	±.10	
	ΔRatio	±.02		3/			±.02	
Terminal strength (see 3.17)	ΔR	±.10		±.25			±.10	
	ΔRatio	±.03		3/			±.03	
Resistance to soldering heat (see 3.20)	ΔR	±.25						
	ΔRatio	±.02		3/			±.02	
Moisture resistance (see 3.21)	ΔR	±.20		±.40	±.50		±.02	
	ΔRatio	±.02		3/			±.02	
Shock, specified pulse (see 3.22)	ΔR	±.25		±.25				
	ΔRatio	±.03		3/			±.03	
Vibration, high frequency (see 3.23)	ΔR	±.25		±.25				
	ΔRatio	±.03		3/			±.03	
Life (see 3.24.1)	ΔR	±.50						
	ΔRatio	±.03		3/			±.03	
High temperature Exposure (see 3.25)	ΔR	±.10		±.20	±.50	±1.0	±.10	
	ΔRatio	±.03		3/			±.03	
Low temperature storage (see 3.26)	ΔR	±.10		±.10	±.25	±.50	±.10	
	ΔRatio	±.02		3/			±.02	
Steady-state humidity (see 3.28)	ΔR	±.20		±.40	±.50	±.50	±.20	
	ΔRatio	±.02		3/			±.02	
FR level		±2.0						
Resistance, tolerance and, when applicable, resistance ratio accuracy (see 3.10.3)		B D F			D F G J	F G J	B D F	± percent
Maximum ambient temperature at rated wattage (see 3.6)		70						°C
Maximum ambient temperature at zero power derating (see figure 1)		125						
Insulation resistance (see 3.19)		10,000						Megohms

1/ Hermetically sealed resistor network (see 3.27).
2/ Not applicable.
3/ Delta ratio are not applicable.

TABLE II. Termination.

Type	Material 1/	Termination area	Code letter
Solderable	Gold	Leadless configuration A	A
		Leadless configuration B	B
		Leaded	C
		Leadless configuration C	Z
	Tin-lead 2/	Leadless configuration A 3/	D
		Leadless configuration B 3/	E
		Leaded	F
		Leadless configuration C 3/	W
	Hot solder dip 2/, 4/	Leadless configuration A 3/	G
		Leadless configuration B 3/	H
		Leaded	J
		Leadless configuration C 3/	T

1/ Base metals will be as specified in MIL-STD-1276.
2/ See 3.5.6.
3/ A nickel barrier will be placed between base metal and lead finish with a minimum thickness of 50 microinches.
4/ Type 52 of MIL-STD-1276, maximum thickness of 200 microinches, is not applicable.

1.2.1.3 Resistance. The four digit resistance designation is applicable to all resistance tolerances. The nominal resistance is identified by four digits; the first three digits represent significant figures and the last digit specifies the number of zeros to follow. When the value of resistance is less than 100 ohms, or when fractional values of an ohm are required, the letter "R" will be substituted for one of the significant digits to represent the decimal point. When the letter "R" is used, succeeding digits of the group represent significant figures. The resistance value designations are shown in table III. Standard values for every decade will follow the sequence demonstrated for the "10 to 100" decade in table IV. The resistance values for tolerance B may be of any value within the limits specified in 3.1, but it is preferred that values be chosen from the "D" column of table IV. Only those resistance values that follow the sequence of values listed in table IV will be considered as conforming to this specification.

1.2.1.3.1 Resistance designation for network schematics J and S. For network schematics J and S, the four digit resistance designation becomes a code indicator with the first digit being an "A" and the following three digits a code number indicating a resistance combination described in the applicable associated specification (see 3.1).

TABLE III. Designation of resistance values.

Designation				Resistance (ohms)			
10R0	to	98R8	inclusive	10	to	98.8	inclusive
1000	to	9880	inclusive	100	to	988	inclusive
1001	to	9881	inclusive	1,000	to	9,880	inclusive
1002	to	9882	inclusive	10,000	to	98,800	inclusive
1003	to	9883	inclusive	100,000	to	988,000	inclusive
1004	to	9884	inclusive	1,000,000	to	9,880,000	inclusive

TABLE IV. Standard resistance values for the 10 to 100 decade.

(B) (D)	(F)	(G) (J)	(B) (D)	(F)	(G) (J)	(B) (D)	(F)	(G) (J)	(B) (D)	(F)	(G) (J)
10.00	10.00	10.00	18.40			33.20	33.20		58.30		
10.10			18.70	18.70		33.60			59.00	59.00	
10.20	10.20		18.90			34.00	34.00		59.70		
10.40			19.10	19.10		34.40			60.40	60.40	
10.50	10.50		19.30			34.80	34.80		61.20		
10.60			19.60	19.60		35.20			61.90	61.90	
10.70	10.70		19.80			35.70	35.70				62.00
10.90			20.00	20.00	20.00			36.00	62.60		
11.00	11.00		20.30			36.10			63.40	63.40	
11.10			20.50	20.50		36.50	36.50		64.20		
11.30	11.30	11.00	20.80			37.00			64.90	64.90	
11.40			21.00	21.00		37.40	37.40		65.70		
11.50	11.50		21.30			37.90			66.50	66.50	
11.70			21.50	21.50		38.30	38.30		67.30		
11.80	11.80		21.80			38.80					68.00
12.00		12.00			22.00			39.00	68.10	68.10	
12.10	12.10		22.10	22.10		39.20	39.20		69.00		
12.30			22.30			39.70			69.80	69.80	
12.40	12.40		22.60	22.60		40.20	40.20		70.60		
12.60			22.90			40.70			71.50	71.50	
12.70	12.70		23.20	23.20		41.20	41.20		72.30		
12.90			23.40			41.70			73.20	73.20	
13.00	13.00	13.00	23.70	23.70		42.20	42.20		74.10		
13.20			24.00		24.00	42.70			75.00	75.00	75.00
13.30	13.30		24.30	24.30				43.00	75.90		
13.50			24.60			43.20	43.20		76.80	76.80	
13.70	13.70		24.90	24.90		43.70			77.70		
13.80			25.20			44.20	44.20		78.70	78.70	
14.00	14.00		25.50	25.50		44.80			79.60		
14.20			25.80			45.30	45.30		80.60	80.60	
14.30	14.30		26.10	26.10		45.90			81.60		
14.50			26.40			46.40	46.40				82.00
14.70	14.70		26.70	26.70		47.00		47.00	82.50	82.50	
14.90					27.00	47.50	47.50		83.50		
15.00	15.00	15.00	27.10			48.10			84.50	84.50	
15.20			27.40	27.40		48.70	48.70		85.60		
15.40	15.40		27.70			49.30			86.60	86.60	
15.60			28.00	28.00		49.90	49.90		88.70	88.70	
15.80	15.80		28.40			50.50			89.80		
16.00		16.00	28.70	28.70				51.00	90.90	90.90	
16.20	16.20		29.10			51.10	51.10				91.00
16.40			29.40	29.40		51.70			92.00		
16.50	16.50		29.80			52.30	52.30		93.10	93.10	
16.70					30.00	53.00			94.20		
16.90	16.90		30.10	30.10		53.60	53.60		95.30	95.30	
17.20			30.50			54.20			96.50		
17.40	17.40		30.90	30.90		54.90	54.90		97.60	97.60	
17.60			31.20			55.60			98.80		
17.80	17.80		31.60	31.60				56.00			
18.00		18.00	32.00			56.20	56.20				
18.20	18.20		32.40	32.40		56.90					
			32.80			57.60	57.60				
					33.00						

1.2.1.4 Resistance tolerance. The resistance tolerance is identified by a single letter in accordance with table V.

TABLE V. Resistance tolerance.

Symbol	Resistance tolerance percent (±)
B	0.1
D	0.5
F	1.0
G	2.0
J	5.0

1.2.1.5 Schematic. The network schematic will be identified by a single letter as specified in the applicable associated specification (see 3.1).

1.2.1.6 Style. The style is identified by the three-letter symbol "RNS" followed by a three-digit number (see 3.1). The letters identify fixed surface mount resistor networks and the three digits represent the specific associated specification.

1.2.1.7 Product level designation. The product level designation as shown in table VI is signified by a single letter (M, P, R, S, and C) that identifies the product level for which the resistor is qualified (see 4.4.4 and 6.3).

TABLE VI. Product level designator.

Product level designator	Product level 1/
C	Non-ER
M	1.0
P	0.1
R	0.01
S	0.001

1/ Failure rate in percent/1,000 hours.

2. APPLICABLE DOCUMENTS

2.1 General. The documents listed in this section are specified in sections 3 and 4 of this specification. This section does not include documents cited in other sections of this specification or recommended for additional information or as examples. While every effort has been made to ensure the completeness of this list, document users are cautioned that they must meet all specified requirements documents cited in sections 3 and 4 of this specification, whether or not they are listed.

2.2 Government documents.

2.2.1 Specifications, standards, and handbooks. The following specifications, standards, and handbooks form a part of this document to the extent specified herein. Unless otherwise specified, the issues of these documents are those cited in the solicitation or contract (see 6.2).

DEPARTMENT OF DEFENSE SPECIFICATION

MIL-PRF-914/3	-	Resistor Network, Fixed, Film, Surface Mount, 16-Pin, Leadless Chip Carrier, Nonestablished Reliability and Established Reliability, Style RNS030.
MIL-PRF-914/4	-	Resistor Network, Fixed, Film, Surface Mount, 20-Pin, Leadless Chip Carrier, Nonestablished Reliability and Established Reliability, Style RNS040.
MIL-PRF-914/5	-	Resistor Network, Fixed, Film, Surface Mount, 16-Pin, Leadless Chip Carrier, Nonestablished Reliability and Established Reliability, Style RNS050.

DEPARTMENT OF DEFENSE STANDARDS

MIL-STD-202	-	Tests Methods for Electronic and Electrical Components Parts.
MIL-STD-690	-	Failure Rate Sampling Plans and Procedures.
MIL-STD-790	-	Established Reliability and High Reliability Qualified Products List (QPL) Systems for Electrical, Electronic, and Fiber Optic Parts Specifications.
MIL-STD-810	-	Environmental Engineering Considerations and Laboratory Test.
MIL-STD-1285	-	Marking of Electrical and Electronic Parts.

(Copies of these documents are available online at http://quicksearch.dla.mil).

2.3 Non-Government publications. The following documents form a part of this document to the extent specified herein. Unless otherwise specified, the issues of the documents cited in the solicitation or contract (see 6.2).

AMERICAN NATIONAL STANDARDS INSTITUTE (ANSI)

J-STD-004	-	Soldering Fluxes Requirements for.
J-STD-006	-	Electronic Grade Solder alloys and Fluxed and Non-Fluxed Solid Solders for Electronic Soldering Applications Requirements for.

(Applications for copies should be addressed to http://www.ipc.org).

SAE INTERNATIONAL

EIA-554A	-	Assessment of Average Outgoing Quality Levels in Parts Per Million (PPM).
EIA-557	-	Statistical Process Control Systems.

(Applications for copies should be addressed to http://www.sae.org).

2.4 Order of precedence. Unless otherwise noted herein or in the contract, in the event of a conflict between the text of this document and the references cited herein (except for related specification sheets), the text of this document takes precedence unless otherwise noted. Nothing in this document, however, supersedes applicable laws and regulations unless a specific exemption has been obtained.

3. REQUIREMENTS

3.1 Specifications sheets. The individual item requirements shall be as specified herein and in accordance with the applicable associated specifications. In the event of any conflict between the requirements of this specification and the associated specifications, the latter shall govern (see 6.2).

3.2 Qualification. Networks furnished under this specification shall be products that are authorized by the qualifying activity for listing on the applicable Qualified Products List (QPL) at the time of award of contract (see 4.4 and 6.3). In addition, the manufacturer shall obtain certification from the qualifying activity that the QPL system requirements of 3.3 and 4.2 have been met and are being maintained.

3.3 QPL system. The manufacturer shall establish and maintain a QPL system for parts covered by this specification. Requirements for this system are specified in MIL-STD-790 (all product levels) and MIL-STD-690 (ER parts only). In addition, the manufacturer shall also establish a Statistical Process Control (SPC) and Part Per Million (ppm) system that meets the requirements as described in 3.3.1. and 3.3.2 respectively.

3.3.1 SPC system. As part of the overall MIL-STD-790 QPL system, the manufacturer shall establish a SPC system that meets the requirements of EIA-557. Typical manufacturing processes for application of SPC include film deposition, cap/lead attachment, laser trimming, encapsulation, termination finish, and weld strength. In addition, the manufacturer shall demonstrate resistance temperature characteristic (RTC) control in the process.

3.3.2 PPM system. As part of the overall MIL-STD-790 QPL system, the manufacturer shall establish a ppm system for assessing the average outgoing quality of lots in accordance with EIA-554A and 4.6.4. Data exclusion, in accordance with EIA-554A, may be used with approval of the qualifying activity. The ppm system shall identify the ppm rate at the end of each month and shall be based on a six month moving average. DC resistance shall be assessed for each style. Style reporting may include both non-ER and ER style combinations.

3.4 Material. The material shall be as specified herein. However, when a definite material is not specified, a material shall be used which will enable the networks to meet the performance requirements of this specification. Acceptance or approval of any constituent material shall not be construed as a guaranty of the acceptance of the finished product.

3.5 Interface and physical dimension. Networks shall meet the interface and physical dimensions specified. Each network shall consist of film type resistance elements with terminations (see 3.1).

3.5.1 Enclosure. Networks shall be encapsulated sufficiently to withstand the environmental tests specified. There shall be no voids that expose the internal circuitry.

3.5.2 Terminations. Terminations shall be free of foreign material and solderable as specified. Terminations shall be judged to be free of foreign material if the visual criteria are met.

3.5.2.1 Solder dip (retinning) leads. The manufacturer (or authorized category B or category C distributor) may solder dip/retin the leads of the product supplied to this specification provided the solder dip process (see appendix A) has been approved by the qualifying activity.

3.5.3 Metallization resistance. The resistance of the metallization of the longest path in the network shall not exceed the limit in table VII.

3.5.4 Soldering. If soldering is used for internal connections, it shall be of such a quality as to enable the networks to meet all the requirements of this specification.

3.5.5 Internal visual inspection (applicable to die and wire bond construction). Networks shall be subjected to a 100 percent precap visual inspection to verify that the interface, physical dimensions, and workmanship are in accordance with the applicable requirements (see appendix B).

TABLE VII. Metallization resistance.

Nominal element resistance value (ohms) R	Maximum metallization resistance (ohms) R
R ≤ 1,000	1
1000 < R < 10,000	5
R ≥ 10,000	10

3.5.6 Pure tin. The use of pure tin, as an underplate or final finish, is prohibited both internally and externally. Tin content of resistor components and solder shall not exceed 97 percent, by mass. Tin shall be alloyed with a minimum of 3 percent lead, by mass (see 6.4.2).

3.6 Power rating. The networks and individual resistors shall have a power rating based on continuous full-load operation at an ambient temperature of 70°C. For temperatures other than 70°C, the power rating shall be in accordance with figure 1.

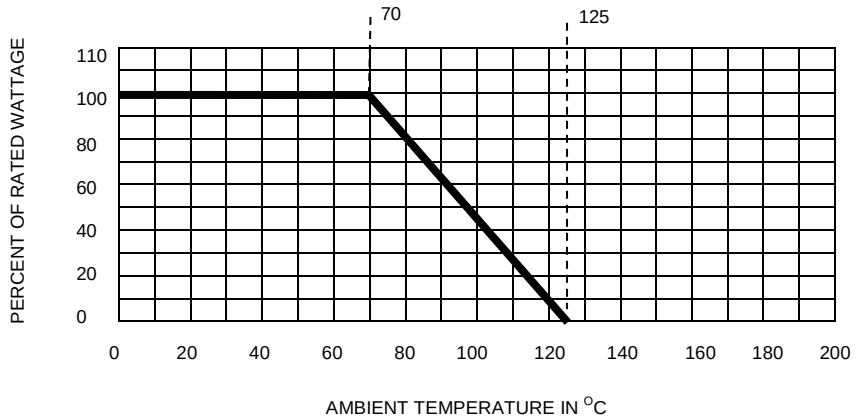

FIGURE 1. Derating curve for high-ambient temperatures.

NOTE: This curve indicates the percentage of nominal wattage to be applied at temperature higher than 70°C. However, at no time shall the applied voltage exceed the maximum for each style (see 3.1).

3.7 Voltage rating. Each resistor element shall have a rated dc continuous working voltage or an approximate sine-wave root-mean-square (rms) continuous working voltage corresponding to the wattage (power) rating, as determined from the following formula:

$$E = \sqrt{PR}$$

Where:
E = Continuous rated dc or rms working voltage in volts.
P = Rated wattage in watts.
R = Nominal resistance in ohms.

In no case shall the rated voltage be greater than the applicable maximum voltage (see 3.1).

3.8 Thermal shock. When networks are tested as specified in 4.8.3, there shall be no evidence of mechanical damage. The change in resistance between initial and final measurements for the combined thermal shock and power conditioning test (see 3.9), group A inspection shall not exceed the values specified:

Characteristic	Delta R	Resistance ratio
K and M	±(0.70 percent +0.01 ohm)	
H	±(0.50 percent +0.01 ohm)	
C, R, and V	±(0.25 percent +0.01 ohm)	±0.03 percent

The change in resistance between initial and final measurements for the thermal shock test of qualification inspection group V, and group C inspection, networks shall not exceed the values specified:

Characteristic	Delta R	Resistance ratio
K and M	±(0.50 percent +0.01 ohm)	
H	±(0.25 percent +0.01 ohm)	
C, R, and V	±(0.15 percent +0.01 ohm)	±0.03 percent

3.9 Power conditioning. When networks are tested as specified in 4.8.4, there shall be no mechanical damage. The change in resistance between initial and final measurements for the combined power conditioning and thermal shock test (see 3.8), networks shall not exceed the values specified:

Characteristic	Delta R	Resistance ratio
K and M	±(0.70 percent +0.01 ohm)	
H	±(0.50 percent +0.01 ohm)	
C, R, and V	±(0.25 percent +0.01 ohm)	±0.03 percent

3.10 DC resistance.

3.10.1 Individual resistance. When networks are tested as specified in 4.8.5, the dc resistance shall be within the specified tolerance of the nominal resistance (see 1.2.1.3) and shall be stable within the specified tolerance during the measurement.

3.10.2 Resistance between isolated pins. The resistance between any two isolated resistors tested as specified in 4.8.5 shall be not less than 5 megohms. This shall only be measured during the final resistance test of group A inspection.

3.10.3 Resistance ratio accuracy (applicable to characteristics C, R, and V). When networks are tested as specified in 4.8.5, the resistance ratio accuracy shall be as specified in table VIII.

TABLE VIII. Resistance ratio accuracy.

Characteristics	Resistance tolerance	Resistance ratio accuracy (percent)
C, R or V	B	0.1
	D	0.1
	F	0.5

3.11 Solderability. When networks are tested as specified in 4.8.6, there shall be no evidence of mechanical damage.

3.11.1 Solderability for leadless packages. The criteria for acceptable solderability during evaluation of the terminations are:

a. The total surface area of the dipped part of the termination is at least 95 percent covered by a continuous new solder coating.

b. That pinholes, voids, porosity, nonwetting, or dewetting are not concentrated in one area and do not exceed 5 percent of the total metallized termination area.

c. That there shall be no solder bridging between any termination area and any other termination area not connected to it by design. In the event that the solder dipping causes bridging, the test shall not be considered a failure provided that a local application of heat (e.g., gas, soldering iron, or redipping) results in solder pull back and no wetting of the dielectric area as indicated by microscope of 10X.

The area of the surface to be tested as specified in 4.8.6c. shall include the total metallized area of both the castellations and bottom terminal pads. In case of a dispute, the percentage of coverage with pinholes or voids shall be determined by actual measurement of these areas, as compared to the total area.

3.11.2 Solderability for leaded packages. When networks are tested as specified in 4.8.6, they shall meet the criteria as specified on figure 2.

a. The total surface area (except for the edge) of the dipped part of the termination is at least 95 percent covered by a continuous new solder coating.

b. That pinholes, voids, porosity, nonwetting, or dewetting are not concentrated in one area and do not exceed 5 percent of the total wetting inspection area.

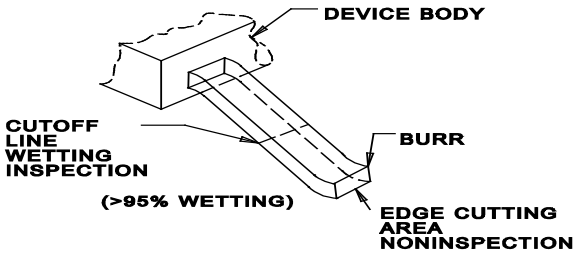

FIGURE 2. Solderability for gullwing packages.

3.12 Resistance to solvents. When networks are tested as specified in 4.8.7, there shall be no evidence of mechanical damage and the marking shall remain legible.

3.13 Resistance-temperature characteristic. When networks are tested as specified in 4.8.8, the resistance-temperature characteristic, at each of the temperatures specified in 4.8.8c referred to room ambient temperature, shall not exceed the value specified:

Characteristic	Resistance temperature characteristic	Element tracking
M	±300 ppm	
K	±100 ppm	
H	±50 ppm	
C and V	±50 ppm	±5 ppm
R	±25 ppm	±5 ppm

3.14 Low temperature operation. When networks are tested as specified in 4.8.9, there shall be no evidence of mechanical damage. The change in resistance between initial and final measurements shall not exceed the values specified:

Characteristic	Delta R	Resistance ratio
M	±(0.50 percent +0.01 ohm)	
K	±(0.25 percent +0.01 ohm)	
H	±(0.10 percent +0.01 ohm)	
C, R and V	±(0.10 percent +0.01 ohm)	±0.02 percent

3.15 Short-time overload. When networks are tested as specified in 4.8.10, there shall be no evidence of arcing, burning, or charring. The change in resistance between initial and final measurements shall not exceed the values specified:

Characteristic	Delta R	Resistance ratio
M	±(0.50 percent +0.01 ohm)	
K	±(0.25 percent +0.01 ohm)	
H	±(0.10 percent +0.01 ohm)	
C, R and V	±(0.10 percent +0.01 ohm)	±0.02 percent

3.16 Adhesion (not applicable to gullwing packages). When networks are tested as specified in 4.8.11, there shall be no evidence of mechanical damage.

3.17 Terminal strength (not applicable to Leadless Chip Carriers (LCC)). When networks are tested as specified in 4.8.12, there shall be no evidence of breaking or loosening of terminals from the network form, or chipping of coating. The change in resistance between initial and final measurements shall not exceed the values specified:

Characteristic	Delta R	Resistance ratio
K, M and H	±(0.25 percent +0.01 ohm)	
C, R, and V	±(0.10 percent +0.01 ohm)	±0.03 percent

3.18 Dielectric withstanding voltage. When networks are tested as specified in 4.8.13, there shall be no mechanical damage, arcing, or breakdown. The leakage current shall not exceed 1 milliampere (mA).

3.19 Insulation resistance. When networks are tested as specified in 4.8.14, the insulation resistance shall not be less than 10,000 megohms.

3.20 Resistance to soldering heat. When networks are tested as specified in 4.8.15, there shall be no evidence of mechanical damage, no demetallization, or leaching. The change in resistance between initial and final measurements shall not exceed the values specified:

Characteristic	Delta R	Resistance ratio
K, M and H	±(0.25 percent +0.01 ohm)	
C, R, and V	±(0.25 percent +0.01 ohm)	±0.02 percent

3.21 Moisture resistance. When networks are tested as specified in 4.8.16, there shall be no evidence of mechanical damage. The change in resistance between initial and final measurements shall not exceed the values specified:

Characteristic	Delta R	Resistance ratio
K, and M	±(0.50 percent +0.01 ohm)	
H	±(0.40 percent +0.01 ohm)	
C, R, and V	±(0.20 percent +0.01 ohm)	±0.02 percent

Additionally, the dielectric withstanding voltage shall be as specified in 3.18 and the insulation resistance shall be 100 megohms minimum.

3.22 Shock (specified pulse). When networks are tested as specified in 4.8.17, there shall be no evidence of mechanical damage. The change in resistance between initial and final measurements shall not exceed the values specified:

Characteristic	Delta R	Resistance ratio
K, M and H	±(0.25 percent +0.01 ohm)	
C, R, and V	±(0.25 percent +0.01 ohm)	±0.03 percent

3.23 Vibration, high frequency. When networks are tested as specified in 4.8.18, there shall be no mechanical damage. The change in resistance between initial and final measurements shall not exceed the values specified:

Characteristic	Delta R	Resistance ratio
K, M and H	±(0.25 percent +0.01 ohm)	
C, R, and V	±(0.25 percent +0.01 ohm)	±0.03 percent

3.24 Life.

3.24.1 Qualification. When networks are tested as specified in 4.8.19, there shall be no evidence of mechanical damage. The change in resistance between initial and final measurements shall not exceed the value specified:

Characteristic	Delta R	Resistance ratio
M	±(2.00 percent +0.01 ohm)	
K, and H	±(0.50 percent +0.01 ohm)	
C, R, and V	±(0.50 percent +0.01 ohm)	±0.03 percent

3.24.2 FR determination (ER styles only). When resistors are tested as specified in 4.8.19, there shall be no evidence of mechanical damage to the resistance element or enclosure. The change in resistance between the initial measurement and any of the succeeding measurements shall not exceed the value specified in table I. This single failure criteria shall be applicable to all measurements during the life test for purposes of determining FRL qualification and is applicable as a parallel requirement with 3.24.1 to the measurements made during the life test specified for qualification.

3.25 High temperature exposure. When networks are tested as specified in 4.8.20, there shall be no evidence of mechanical damage. The change in resistance between initial and final measurements shall not exceed the values specified:

Characteristic	Delta R	Resistance ratio
M	±(1.00 percent +0.01 ohm)	
K	±(0.50 percent +0.01 ohm)	
H	±(0.20 percent +0.01 ohm)	
C, R, and V	±(0.10 percent +0.01 ohm)	±0.03 percent

3.26 Low temperature storage. When networks are tested as specified in 4.8.21, there shall be no evidence of mechanical damage. The change in resistance between initial and final measurements shall not exceed the values specified:

Characteristic	Delta R	Resistance ratio
M	±(0.50 percent +0.01 ohm)	
K	±(0.25 percent +0.01 ohm)	
H	±(0.10 percent +0.01 ohm)	
C, R, and V	±(0.10 percent +0.01 ohm)	±0.02 percent

3.27 Hermetic seal (applicable to characteristic C) (see 4.8.22). For the purpose of this specification, a hermetically sealed network is one which shall be capable of passing the seal test specified in 4.8.22 or of meeting a leak rate requirement of not more than 5.0 x 10^{-7} cubic centimeters per second. Characteristic C networks may be furnished against H and V requirements (see 3.31.3).

3.27.1 Nonhermetic seal (applicable to characteristics H, K, M, R, and V). For the purpose of this specification, a nonhermetically sealed network is one not conforming in full to the requirements of 3.27. Characteristics H, K, M, R, and V networks shall not be furnished against characteristic C requirements.

3.28 Steady-state humidity. When networks are tested as specified in 4.8.23, there shall be no evidence of mechanical damage. The change in resistance between initial and final measurements shall not exceed the values specified:

Characteristic	Delta R	Resistance ratio
K, and M	±(0.50 percent +0.01 ohm)	
H	±(0.40 percent +0.01 ohm)	
C, R, and V	±(0.20 percent +0.01 ohm)	±0.02 percent

Additionally, the dielectric withstanding voltage shall be as specified in 3.18 and the insulation resistance shall be 100 megohms minimum.

3.29 Bond pull (applicable to configuration C of styles RNS030 and RNS040). When networks are tested as specified in 4.8.24, all bonds shall remain undamaged, with no pad lifting or pull away.

3.30 Fungus. All external materials shall be nonnutrient to fungus growth. The manufacturer shall verify by certification that all external materials are fungus resistant or shall test the resistors as specified in 4.8.25. There shall be no evidence of fungus growth on the external surfaces.

3.31 Marking. Each network shall be marked in accordance with MIL-STD-1285 and as indicated below in the following order:

a. Complete PIN.

b. Manufacturer's CAGE code.

c. Manufacturing date code and "JAN" marking.

d. Pin number 1 identifier (see 3.1).

3.31.1 Minimum marking. When the physical size of the resistor style precludes the marking (see 3.31), the minimum marking required shall be as specified in the associated specification (see 3.1). Marking shall remain legible at the end of all tests. In those cases where full marking is not on the resistor body, the full marking shall be marked on the unit package.

3.31.2 JAN and J marking. The United States Government has adopted and is exercising legitimate control over the certification marks “JAN” and “J”, respectively, to indicate that items so marked or identified are manufactured to, and meet all the requirements of specifications. Accordingly, items acquired to, and meeting all of the criteria specified herein and in applicable specifications shall bear the certification mark “JAN” except that items too small to bear the certification mark “JAN” shall bear the letter “J”. The “JAN” or “J” shall be placed immediately before the part number except that if such location would place a hardship on the manufacturer in connection with such marking, the “JAN” or “J” may be located on the first line above or below the part number. Items furnished under contracts or orders which either permit or require deviation from the conditions or requirements specified herein or in applicable specifications shall not bear “JAN” or "J". In the event an item fails to meet the requirements of this specification and the applicable specification sheets, the manufacturer shall remove completely the military part number and the “JAN” or the “J” from the sample tested and also from all items represented by the sample. The “JAN” or “J” certification mark shall not be used on products acquired to contractor drawings or specifications. The United States Government has obtained Certificate of Registration Number 504,860 for the certification mark “JAN” and Registration Number 2,577,735 for the certification mark “J”.

3.31.3 Supplying to lower resistance temperature characteristics and lower resistance tolerances or both. Networks qualified and marked to lower resistance temperature characteristics or lower tolerance levels, or both, with acquiring agency approval, are substitutable for networks marked to higher resistance temperature characteristics or higher tolerance levels and shall not be remarked unless specified in the contract or order (see 6.2) (see table IX and table X).

TABLE IX. Resistance-temperature characteristic substitution.

Characteristic	Characteristic substitution
C	
R	
V	C, R
H	C, R, V
K	
M	K

TABLE X. Resistance tolerance substitution.

Resistance tolerance	Resistance tolerance substitution
B	
D	B
F	B, D,
G	B, D, F,
J	B, D, F, G

3.31.4 Termination material substitution. With procuring activity approval termination material G resistors are a direct one-way substitute for termination material D resistors, provided all other characteristics are equal or better (see table XI).

3.31.5 Substitution of ER type parts for non-ER parts. With procuring activity approval ER parts are a direct one-way substitute for non-ER parts provided all other characteristics are equal or better.

3.32 Recycled, recovered, environmentally preferable, or biobased materials. Recycled, recovered, environmentally preferable, or biobased materials should be used to the maximum extent possible, provided that the material meets or exceeds the operational and maintenance requirements, and promotes economically advantageous life cycle costs.

TABLE XI. Terminal Substitution. 1/

Termination	Allowable substitute
G	D

1/ Termination material "D" cannot be substituted for a "G", but "D" can be converted to a "G" in accordance with A.5.3c by hot solder dipping and performing 100% DC resistance (see 3.10 and 4.8.5).

3.33 Workmanship. Networks shall be processed in such a manner as to be uniform in quality and shall meet the requirements of 3.4 to 3.5.4 inclusive, and 3.5.6 and be free from other defects that will affect life, serviceability, or appearance.

4. VERIFICATION

4.1 Classification of inspections. The inspections requirements specified herein are classified as follows:

a. Qualification inspection (see 4.4).

b. Verification of qualification (see 4.5).

c. Conformance inspection (see 4.6).

d. Periodic group C inspection (see 4.7).

4.2 Reliability and quality.

4.2.1 QPL system. The manufacturer shall establish and maintain a QPL system in accordance with 3.3. Evidence of such compliance is a prerequisite for qualification and retention of qualification.

4.2.2 SPC system. A SPC program shall be established and maintained in accordance with EIA-557. Evidence of such compliance is a prerequisite for qualification and verification of qualification.

4.3 Inspection conditions and precautions.

4.3.1 Inspection conditions. Unless otherwise specified herein, all inspections shall be performed in accordance with the test conditions specified in the "GENERAL REQUIREMENTS" of MIL-STD-202.

4.3.2 Precautions. Adequate precautions shall be taken during inspection to prevent condensation of moisture on networks, except during moisture-resistance test and steady state humidity test.

4.4 Qualification inspection. Qualification inspection shall be performed at a laboratory acceptable to the Government (see 6.3).

4.4.1 Sample. The sample shall be taken at random from a production run and shall be produced with equipment and procedures normally used in production.

4.4.2 Test routine. Sample units shall be subjected to the qualification inspection specified in table XII, in the order shown. All sample units shall be subjected to the inspection of group I, except for the sample units required for group X. All sample units shall be divided as specified in table XII for group II through group IX inclusive, and subjected to the inspection for their particular group. Sample sizes and extent of qualification shall be as specified in appendix A of this specification.

4.4.3 Defectives. Defectives in excess of those allowed in table XII shall be cause for refusal to grant qualification.

4.4.4 FRL and quality level verification (ER styles only).

4.4.4.1 FR qualification. FR qualification shall be in accordance with the general requirements and detail requirements of MIL-STD-690 and the following details:

a. Procedure I: Qualification at the initial FR level. Level M (1.0 percent of FRSP-60) shall apply. Sample units shall be subjected to the qualification inspection specified in group VII of table XII (see 4.4.2). Entire life test sample shall continue on test to 10,000 hours as specified in 4.8.19, upon completion of the 2,000 hour qualification.

b. Procedure II: Extension of qualification to lower FR levels. To extend qualification to the R (0.01 percent) and S (0.001 percent) FRL, unit hours from two or more styles of similar construction may be combined. Style combinations shall be as described for lot formation (see 4.6.2.1).

c. Procedure III: Maintenance of FR level qualification. Maintenance period B of FRSP-10 shall apply. Regardless of the number of production lots produced during this period, the specified number of unit hours shall be accumulated to maintain qualification (see 4.7, periodic group C inspection).

4.5 Verification of qualification. Every 6 months, the manufacturer shall provide verification of qualification to the qualifying activity. Continued qualification is based on meeting the following requirements.

a. MIL-STD-790 program.

b. Design of networks has not been modified.

c. Lot rejection for group A (subgroup 1 and subgroup 3) does not exceed 5 percent or one lot, whichever is greater.

d. Lot rejection for group B does not exceed 5 percent or one lot, whichever is greater.

e. Periodic group C inspection.

f. FRL.

g. PPM assessment (NOTE: Grouping of styles is permitted).

h. Continued qualification to non-ER level (C) shall be based on continued maintenance of qualification for the ER part (minimum M FRL maintained).

4.6 Conformance inspection.

4.6.1 Inspection of product for delivery.

4.6.1.1 Non-ER networks. Group A inspection for non-ER resistors shall be used for preparation for delivery (see 4.6.3.1, non-ER group A inspection).

4.6.1.2 ER networks. Inspection of product for delivery shall consist of the group A and group B inspection.

TABLE XII. Qualification inspection.

Inspection	Requirement paragraph	Method paragraph	Number of sample units 1/	Defects allowed 2/
Group I 3/ 4/				
Thermal shock	3.8	4.8.3	All sample units	0
Power conditioning	3.9	4.8.4		
DC resistance	3.10	4.8.5		
Hermetic seal (when applicable)	3.27	4.8.22		
Group IA 3/ 5/				
Visual and mechanical inspection	3.1, 3.4 through 3.5.2, inclusive and 3.31 through 3.31.4 inclusive	4.8.2	All sample units	0
Group II 6/				
Solderability	3.11	4.8.6	5 samples any value	0
Group III 6/				
Resistance to solvents	3.12	4.8.7	12 samples any value	
Group IV				
Resistance-temperature characteristic	3.13	4.8.8	20 10 high or 10 critical 7/ 30 10 low	1
Low temperature operation	3.14	4.8.9		
Short-time overload	3.15	4.8.10		
Terminal strength (not applicable to LCC)	3.17	4.8.12		
Hermetic seal (when applicable)	3.27	4.8.22		
Group IVA				
Adhesion (not applicable to gullwing packages)	3.16	4.8.11	8 samples any value	1
Group V				
Thermal shock	3.8	4.8.3	20 10 high or 10 critical 7/ 30 10 low	1
Dielectric withstanding voltage	3.18	4.8.13		
Insulation resistance	3.19	4.8.14		
Resistance to soldering heat	3.20	4.8.15		
Moisture resistance	3.21	4.8.16		
Hermetic seal (when applicable)	3.27	4.8.22		
Group VI				
Shock, specified pulse	3.22	4.8.17	20 10 high or 10 critical 7/ 30 10 low	1
Vibration, high frequency	3.23	4.8.18		
Hermetic seal (when applicable)	3.27	4.8.22		
Group VII				
Life	3.24.1	4.8.19	34 high 102 34 critical 8/ 34 low	1
Group VIII				
High temperature exposure	3.25	4.8.20	20 10 high or 10 critical 7/ 30 10 low	1
Low temperature storage	3.26	4.8.21		
Group IX				
Steady-state humidity	3.28	4.8.23	20 10 high or 10 critical 7/ 30 10 low	1
Group X				
Fungus	3.30	4.8.25	10	0

1/ See appendix A for details.
2/ Failure of a single network in one or more tests of a group shall be charged as a single failure.
3/ Nondestructive tests.
4/ Networks shall meet all requirements of group I before subjecting to group II through group IX.
5/ Marking shall be considered defective if the marking is illegible or incorrect.
6/ Test may be performed on electrical rejects.
7/ When no critical value is specified, only the highest and lowest resistance values shall be tested (20 samples, total).
8/ When no critical value is specified, only the 51 highest and 51 lowest resistance values are tested.

4.6.2 Inspection and production lot.

4.6.2.1 Inspection lot. An inspection lot, as far as practical, shall consist of all the networks of the same style, characteristic, and protective enclosure or coating and manufactured under essentially the same process and conditions during a manufacturing period of 1 month. For purposes of lot formation, all terminal types may be included in the same lot; however, all lead types that are combined shall have the same method of terminal attachment. This can be accomplished by proportion based on manufacturing percentages by termination type, equally divided by termination type, equally divided by termination type or by establishing an alternating termination type sequence. In order to incorporate a termination type sampling grouping, a written description must be presented and approved by the qualifying activity. This plan must assure that the grouping only combines styles of the same method of terminal attachment. Non-ER and ER lots shall be kept separate.

4.6.2.2 Production lot. A production lot shall consist of all networks of the same style, schematic, nominal resistance value, resistance tolerance, resistance temperature characteristic, and terminal type. Manufacture of all parts in the lot shall have been started, processed, assembled, and tested as a group. Lot identity shall be maintained throughout the manufacturing cycle.

4.6.3 Group A inspection.

4.6.3.1 Non-ER networks. The manufacturer shall establish and maintain an inspection system to verify that networks meet dc resistance, visual/mechanical, hermetic seal (when applicable), and solderability requirements. In-line or process control may be part of such system. The inspection system shall also include criteria for lot rejection and corrective actions. The inspection system shall be verified under the overall MIL-STD-790 QPL system.

NOTE: Since the non-ER (C level) is the ER design without the mandatory conformance inspection and FRL assessment, the product is still expected to meet the environmental qualification type requirements (e.g., moisture resistance, shock, vibration, etc.).

4.6.3.2 ER networks. Group A inspection shall consist of the inspections specified in table XIII, in the order shown.

4.6.3.2.1 Subgroup 1. Subgroup 1 tests shall be performed on a production lot basis on 100 percent of lot. Networks that are out of resistance tolerance, failures for isolated pin resistance and ratio, or which experience a change in resistance greater than that permitted, shall be removed from the lot and not supplied to this specification. Lots having more than 10 percent rejects, or one network, whichever is greater, due to exceeding dc resistance requirements of 3.10, shall not be furnished on contracts.

4.6.3.2.2 Manufacturer's production inspection. If the manufacturer performs tests similar to those specified in group A, subgroup 1, as the final step of his manufacturing process, the subgroup 1 test may be eliminated when approved by the qualifying activity. The following criteria must be complied with:

a. The manufacturer's production test are identical to, or more stringent than, those specified for subgroup 1 tests.

b. 100 percent of the product is subjected to these tests.

c. Failure criteria are identical to, or more stringent than, the subgroup 1 tests.

d. Lot rejection criteria are identical to, or more stringent than, the subgroup 1 tests.

e. Once approved, future changes require approval from the qualifying activity.

TABLE XIII. Group A inspection.

Inspection	Requirement paragraph	Test method paragraph	Sampling procedure
Subgroup 1 1/			
Thermal shock	3.8	4.8.3	100 percent inspection
Power conditioning	3.9	4.8.4	
DC resistance 2/	3.10	4.8.5	
Hermetic seal (when applicable)	3.27	4.8.22	
Subgroup 2			
Visual inspection 3/	3.5	4.8.2	See 4.6.3.2.3
Subgroup 3			
Solderability 4/	3.11	4.8.6	See 4.6.3.2.4

1/ At the manufacturer's option, the determination of resistance change may be by any method which is within the accuracy requirements of this specification.

2/ Networks shall meet the specified initial resistance tolerance. The resistance measurement made upon completion of each subgroup 1 test may be used if measurement has been made which can, without conversion, be directly related to nominal resistance value and tolerance.

3/ At the manufacturer's option, marking inspection may be performed after group B inspection; however, if this is done, no defects shall be permitted. Marking shall remain legible at the end of all tests.

4/ The manufacturer may request the deletion of the subgroup 3 solderability test, provided an in-line or process control system for assessing and assuring the solderability of leads can be validated and approved by the qualifying activity. Deletion of the test does not relieve the manufacturer from meeting this test requirement in case of dispute. If the design, material, construction, or processing of the part is changed, or if there are any problems, the qualifying activity may require resumption of the test.

4.6.3.2.3 Subgroup 2 tests. The subgroup 2 tests shall be performed on an inspection lot basis. A random sample shall be selected in accordance with table XIV. In the event of one or more failures, the lot is rejected. The rejected lot may be rescreened and defects removed and resubmitted to the table XIV sampling plan. If one or more defects are found in the second sample, the lot is rejected and shall not be supplied to this specification. (NOTE: This corrective action applies to the original quality defect found. If another defect type is found in the second sample, a rescreen for that defect is also permitted).

TABLE XIV. Sampling plans for ppm categories.

Lot size	Sample size subgroup 2	Sample size ppm
1 to 13	100%	100%
14 to 125	13	100%
126 to 150	13	125
151 to 280	20	125
281 to 500	29	125
501 to 1,200	34	125
1201 to 3,200	42	125
3201 to 10,000	50	125
10001 to 35,000	60	294
35001 to 150,000	74	294
150001 to 500,000	90	345
500,001 and above	102	435

4.6.3.2.4 Subgroup 3 (solderability). The subgroup 3 test shall be performed on an inspection lot basis for ER parts. A sample shall be selected from each lot in accordance with table XV. As an option, the manufacturer may use electrical rejects from the subgroup 1 tests for all or part of the sample. If there are one or more defects, the inspection lot is rejected. The manufacturer may use one of the following options for corrective action:

a. Each production lot that was used to form the failed inspection lot shall be individually submitted to the solderability test. Production lots that pass are available for shipment. Production lots that fail can be submitted to the rework procedures of 4.6.3.2.4b.

b. The failed inspection or production lot is submitted to a 100 percent hot solder dip using an approved solder dip process in accordance with 3.5.2.1 or other rework process. A subsequent solderability test shall then be performed. If the lot passes, it is available for shipment; if the lot fails, the manufacturer may perform the hot solder dip one additional time. If the lot fails to pass, the lot is considered rejected and shall not be supplied to this specification.

TABLE XV. Solderability sampling plan.

Lot size	Sample size
1 to 3200	5
3201 to 10000	8
10001 to 35000	13
35001 and above	20

4.6.3.2.4.1 Disposition of samples. The solderability test is considered a destructive test and samples submitted to the solderability test shall not be supplied on the contract.

4.6.4 PPM assessment (non-ER and ER). The manufacturer shall establish and maintain a system for assessing the average outgoing quality in ppm of lots supplied to this specification. This ppm assessment should be based on inspections performed on each inspection lot to verify that resistor networks meet dc resistance and tolerance requirements. For ER resistor networks, this inspection shall occur after the group A, subgroup 1, 100 percent screens have been completed.

4.6.4.1 Sampling plan. Minimum sample sizes for inspection lots shall be selected in accordance with table XIV. For non-ER networks, the sampling system and plan used for the group A inspection (see 4.6.3.1) may be the basis for assessing ppm.

4.6.4.2 Rejected lots. Any rejected lot shall be segregated from new lots and those lots that have passed the ppm assessment. A rejected lot may be rescreened for the quality characteristic found defective in the sample and any defects removed. A new second sample shall be randomly selected. If one or more defects are found, the lot is rejected and shall not be supplied to this specification.

4.6.4.3 PPM calculations. PPM calculations shall be based on the accumulated results of the initial sample. Calculations and exclusion shall be in accordance with EIA-554-1. (NOTE: PPM calculations shall not be based on the second sample submission for a rejected lot as described in 4.6.4.2).

4.6.5 Group B inspection (ER only). Group B inspection shall consist of the tests specified in table XVI, in the order shown. They shall be performed on sample units that have been subjected to and have passed group A inspection.

4.6.5.1 Sampling plan. All qualified styles may be grouped together in a single sample. This can be accomplished by proportion based on manufacturing percentages by style, equally divided by style, or by establishing an alternating style sequence. In order to incorporate a style sampling grouping, a written description must be presented and approved by the qualifying activity. This plan must assure that the grouping only combines styles of the same basic design, encapsulation material, and the same element type.

4.6.5.2 Subgroup 1. A sample of 13 parts shall be randomly selected. If one or more defects are found, the lot shall be rescreened and defects removed. A new sample of 13 parts shall be randomly selected. If one or more defects are found in this second sample, the inspection lot shall be rejected and shall not be supplied to this specification.

4.6.5.3 Subgroup 2. A sample of 13 parts shall be randomly selected. If one or more defects are found, the lot shall be rescreened and defects removed. A new sample of 13 parts shall be randomly selected. If one or more defects are found in this second sample, the inspection lot shall be rejected and shall not be supplied to this specification.

4.6.5.4 Subgroup 3. A sample of eight parts shall be randomly selected. If one or more defects are found, the lot shall be rescreened and defects removed. A new sample of eight parts shall be randomly selected. If one or more defects are found in this second sample, the inspection lot shall be rejected and shall not be supplied to this specification.

4.6.5.5 Disposition of sample units. Sample units which have passed all the group B, subgroup 1 and subgroup 2 inspections, method A mounted networks only, may be delivered on the acquisition document provided they are within resistance tolerance and meet requirements for visual and mechanical inspection. Sample units which have been subjected to subgroup 3 inspections shall not be supplied to this specification.

TABLE XVI. Group B inspection (ER only).

Inspection	Requirement paragraph	Test method paragraph	Sample size	Number of defects allowed
Subgroup 1 1/ Visual and mechanical examination (when applicable)	3.1 and 3.31	4.8.2	13	0
Subgroup 2 2/ Resistance-temperature characteristic	3.13	4.8.8	13	0
Subgroup 3 2/ Resistance to solvents	3.12	4.8.7	8	0

1/ Only applicable when marking inspection is not performed in group A inspection. No defects shall be permitted. Marking shall remain legible at the end of all tests.

2/ If the manufacturer can demonstrate that this test has been performed five consecutive times with zero failures, the frequency of this test, with the approval of the qualifying activity, can be performed on an annual basis. If the design, material, construction, or processing of the part is changed, or if there are any quality problems or failures, the qualifying activity may require resumption of the original test frequency.

4.7 Periodic group C inspection (ER only). Periodic inspection shall consist of group C inspection tests specified in table XVII, in the order shown. They shall be performed on sample units selected from lots that have passed group A and group B inspection. Except where the results of these inspections show noncompliance with the applicable requirements (see 4.7.6), delivery of products which have passed group A and group B inspections shall not be delayed pending the results of these periodic inspections.

4.7.1 Sampling plan. If more than 1,000 resistor networks of any style or style grouping are produced over the maintenance period, the group C tests shall be performed as specified. If the production rate is less than 1,000 resistor networks for any style or style grouping over the maintenance period, then the monthly, quarterly, or semi-annual group C inspection may be postponed until at least 1,000 resistor networks of that style or style grouping are produced (except for the monthly life test). In any case, the monthly tests shall be performed at least once every 3 months. The quarterly tests shall be performed at least every 6 months and the semi-annual tests shall be performed at least once every year. This requirement is waived if the manufacturer has obtained a reduced inspection status through the qualifying activity.

All qualified styles may be grouped together in a sample. This can be accomplished by proportion based on manufacturing percentages by styles, equally divided by style, or by establishing an alternating style sequence. In order to incorporate a style sampling grouping, a written description must be presented and approved by the qualifying activity. This plan must assure that the grouping only combines styles of the same basic design, encapsulation material, and the same element type.

4.7.2 Monthly.

4.7.2.1 Subgroup 1. Ten sample units of any resistance value between the critical values and low values shall be inspected every month. If none of these values are produced during the month, networks of the lowest resistance value produced shall be inspected, with one defective unit allowed.

4.7.2.2 Subgroup 2 (not applicable to gullwing packages). Eight sample units of any value shall be inspected every month, with one defective unit allowed.

4.7.3 Quarterly.

4.7.3.1 Subgroup 1, subgroup 3 and subgroup 4. Ten sample units from the highest resistance decade produced shall be subjected to the tests of subgroup 1 (one defective unit shall be allowed), 10 sample units of the value produced closest to the critical value shall be subjected to the test of subgroup 3 (one defective unit allowed), 10 sample units from the highest resistance decade shall be subjected to the test of subgroup 4 (one defective unit allowed).

4.7.3.2 Subgroup 2. Test samples shall be selected from each inspection lot produced during a 1-month period. These samples shall be accumulated and placed on the life test as specified in 4.8.19, once a month, for the full 10,000-hour life test period. The test sample size shall be determined by the manufacturer so that the unit hours generated meet the requirements specified for the qualified FRL (see 4.4.4). In any event, a minimum of five samples shall be selected from each lot. As far as practical, the resistance values tested during a maintenance period shall be representative of all resistance decades produced during this period. The accumulated data shall be used for maintenance and extension of FR qualification.

4.7.4 Semiannually. Ten sample units of any resistance value shall be inspected semiannually. One defective unit shall be allowed.

4.7.5 Disposition of samples. Sample units that have been subjected to group C inspection shall not be delivered on the contract.

TABLE XVII. Group C inspection. 1/

Inspection	Requirement paragraph	Test method paragraph	Number of sample units to be inspected	Number of failures allowed
Monthly 2/				
Subgroup 1				
Thermal shock	3.8	4.8.3		
Dielectric withstanding voltage	3.18	4.8.13		
Insulation resistance	3.19	4.8.14		
Low temperature operation	3.14	4.8.9	10	1
Short-time overload	3.15	4.8.10		
Terminal strength (not applicable to LCC)	3.17	4.8.12		
Hermetic seal (when applicable)	3.27	4.8.22		
Subgroup 2 2/				
Adhesion (not applicable to gullwing packages)	3.16	4.8.11	8	1
Quarterly				
Subgroup 1				
Resistance to soldering heat	3.20	4.8.15		
Moisture resistance	3.21	4.8.16	10	1
Hermetic seal (when applicable)	3.27	4.8.22		
Subgroup 2				
Life	3.24.2	4.8.19	See 4.7.3.2	See 4.7.3.2
Subgroup 3 3/				
Steady-state humidity	3.28	4.8.23	10	1
Subgroup 4 2/				
Shock (specified pulse)	3.22	4.8.17		
Vibration (high frequency)	3.23	4.8.18	10	1
Hermetic seal (when applicable)	3.27	4.8.22		
Semiannually 3/				
High temperature exposure	3.25	4.8.20	10	1
Low temperature storage	3.26	4.8.21		

1/ Marking shall remain legible at the end of all tests.

2/ If the manufacturer can demonstrate that these tests have been performed five consecutive times with zero failures, these tests, with the approval of the qualifying activity, can be deleted. The manufacturer, however, shall perform these tests every 3 years after the deletion as part of long term design verification. If the design, material, construction, or processing of the part is changed, or if there are any quality problems, the qualifying activity may require resumption of the specified testing. Deletion of testing does not relieve the manufacturer from meeting the test requirements in case of dispute.

3/ If the manufacturer can demonstrate that this test has been performed five consecutive times with zero failures, the frequency of this test, with the approval of the qualifying activity, can be performed on an annual basis. If the design, material, construction, or processing of the part is changed, or if there are any quality problems or failures, the qualifying activity may require resumption of the original test frequency.

4.7.6 Noncompliance. If a sample fails to pass group C inspection, the manufacturer shall immediately notify the qualifying activity and the cognizant inspection activity of such failure and take corrective action on the materials or processes, or both, as warranted, and on all units of product which can be corrected and which are manufactured under essentially the same conditions, with essentially the same materials, processes, etc., and which are considered subject to the same failure. For ER level, acceptance and shipment of the product shall be discontinued until corrective action, acceptable to the qualifying activity, has been taken. For C level, stop shipment may not be necessary depending on the nature of the failure. After the corrective action has been taken, group C inspection shall be repeated on additional sample units (all inspections, or the inspection which the original sample failed, at the option of the qualifying activity). Group A and group B inspection may be reinstituted; however, final acceptance and shipment shall be withheld until the group C inspection has shown that the corrective action was successful. In the event of failure after reinspection, information concerning the failure shall be furnished to the cognizant inspection activity and the qualifying activity.

4.8 Methods of inspection.

4.8.1 Network handling procedures.

4.8.1.1 Method A. When specified herein, the networks shall be unmounted or tested using pressure type contacts. The test fixture shall be such that it shall not be the cause of, nor contribute to, any failure of the network in any test for which it may be used.

4.8.1.2 Method B. When specified herein, the networks shall be mounted on test boards of fiberglass base, nominally .0625 inch (1.589 mm) thick. Mounting accomplished with either Sn60A or Sn63A solder shall be in accordance with J-STD-006. After mounting, the boards must be thoroughly cleaned to remove all traces of flux residue by an appropriate cleaning method, then oven dried for 5 minutes minimum at 125°C ±10°C. The test board and mounting procedure shall be such that it shall not be the cause of, nor contribute to, any failure of a network in any test for which it may be used. If more than one network is placed on a given test board, the networks shall be spaced a minimum of 1.00 inch (25.4 mm) from each other.

4.8.2 Visual and mechanical inspection. Networks shall be inspected to verify that the materials, design, construction, physical dimensions, and workmanship are in accordance with the applicable requirements (see 3.1, 3.4 through 3.5.2 inclusive, and 3.31 through 3.31.4 inclusive).

4.8.3 Thermal shock (see 3.8). Networks shall be tested in accordance with method 107 of MIL-STD-202. The following details and exception shall apply:

a. Mounting: As specified in 4.8.1, method A.

b. Measurement before cycling: DC resistance shall be measured as specified in 4.8.5.

c. Test condition: For group A inspection and qualification group I, test condition B. For qualification group V and group C inspection, test condition B-1.

d. Measurement after cycling: Within 3 hours after stabilization at room temperature, dc resistance shall be measured as specified in 4.8.5. For group A inspection and qualification group I, dc resistance shall be measured following the test of 4.8.4.

e. Following the test, the networks shall be inspected for evidence of mechanical damage.

4.8.4 Power conditioning (see 3.9). Networks shall be tested in accordance with method 108 of MIL-STD-202. The following details and exceptions shall apply:

a. Mounting: As specified in 4.8.1, method A.

b. Test temperature and tolerance: 25°C, +20°C, -5°C.

c. Initial measurements: Measurements may be made inside or outside the chamber.

(1) Inside chamber: When measurements are to be made inside the chamber, the initial dc resistance shall be measured, at the applicable test temperature, after temperature stabilization, and within 8 hours of exposure of the networks to the test temperature. This initial measurement shall be used as the reference temperature for all subsequent measurements under the same conditions.

(2) Outside chamber: When measurements are to be made outside the chamber, the initial dc resistance shall be measured at room temperature. This initial measurement shall be used as the reference temperature for all subsequent measurements under the same condition.

d. Operating conditions: Rated dc continuous working voltage, filtered or nonfiltered full-wave rectified ac voltage shall be simultaneously applied to each resistor in the network intermittently, one and one-half hours "on" and one-half hour "off", for 100 hours ±4 hours and at the test temperature. During the "on" cycle, the voltage shall be regulated and controlled to maintain 5 percent of the rated continuous working voltage. Unless otherwise specified, power applied shall be 1.5 times the rated power (see 3.1) not to exceed the maximum voltage.

e. Measurements after test: Following a minimum one-half hour stabilization period, dc resistance shall be measured as specified in 4.8.5.

f. Inspection after test: Networks shall be inspected for evidence of mechanical damage.

4.8.5 DC resistance (see 3.10). The dc resistance shall be measured in accordance with method 303 of MIL-STD-202. The following details and exceptions shall apply:

a. Mounting: As specified in 4.8.1, method A.

b. Measuring apparatus: Different types of measuring test equipment (multimeters, bridges, or equivalent) are permitted to be used on the initial and final readings of this test, provided the equipment is the same style, model, or if it can be shown that the performance of the equipment is equivalent or better.

c. Measurement energy for electronic test equipment: The measurement energy applied to the unit under test shall not exceed 10 percent of the 25°C rated wattage times 1 second.

d. Test voltage for bridges: Measurements of resistance shall be made using the test voltages specified in table XVIII. The test voltage chosen, whether it be the maximum or a lower voltage which would still provide the sensitivity required, shall be applied across the terminals of the resistor. This same voltage shall be used whenever a subsequent resistance measurement is made.

e. Temperature: Unless otherwise specified herein, the temperature at which subsequent and final resistance measurements are made in each test shall be within ±2^{O}C of the temperature at which the initial resistance measurement was made.

TABLE XVIII. Standard dc resistance test voltages.

Nominal Resistance (in ohms)	Maximum test voltage (in volts)		
	10 milliwatts	25 to 99 milliwatts	100 to 225 milliwatts
10 to 98.8	0.3	0.5	1.0
100 to 988	1.0	1.0	1.0
1,000 to 9,880	3.0	3.0	3.0
10,000 to 98,800	10.0	10.0	10.0
100,000 and above	30.0	30.0	30.0

f. Procedure: Unless otherwise specified (see 3.1), all resistor elements that can be isolated in the network shall be individually measured. All resistor elements that cannot be isolated in the network shall be measured using a guarded resistance measuring technique as far as practical (see 3.1). Interpin resistance shall be measured using the test instrument used for measuring the isolated resistors.

g. Resistance ratio accuracy (applicable to characteristics C, R, and V): Ratio accuracy is defined as the percent difference between the nominal resistance ratio and the ratio determined from the actual resistance measurement using the specified reference resistor from the applicable schematic (see 3.1). The ratio accuracy required shall be as specified. The change in ratio for any test is defined as the percent change in the actual ratio determined from resistance measurements before and after the test referred to the actual ratio before the test. The resistance ratio is defined as follows:

$$\frac{R_r}{R_{REF}}$$

Where: R_r - Resistance of the element being measured
R_{REF} - Resistance of the reference element.

4.8.6 Solderability (see 3.11). Networks shall be tested in accordance with method 208 of MIL-STD-202. The following details and exceptions shall apply:

a. Application of flux. Flux, type A in accordance with J-STD-004 shall be used. Terminations shall be immersed in the flux, which is at room temperature, to the minimum depth necessary to cover the surface to be tested. The parts shall be attach to a dipping device and the flux terminations shall be immersed one side at a time (gullwing devices) or the entire body of the part (LCC packages). The terminations to be tested shall be immersed in flux for a period of 5 seconds to 10 seconds.

b. Solder dip. Molten solder shall be maintained at a uniform temperature of $245^{O}C \pm 5^{O}C$. The surface of the molten solder shall be skimmed of dross and burned flux prior to immersing the terminations in the solder. The part shall be attached to a dipping device and the flux terminations shall be immersed one side at a time (for gullwing devices) or the entire body of the part may be immersed (LCC packages), in molten solder to the depth and the terminations on the LCC shall be dipped at 30° to 45° from vertical. The immersion and emersion rates shall be 1.000 inch ±.250 inch (25.4 mm ±6.35 mm) per second and the dwell time in the solder bath shall be 5.0 seconds ±0.5 second. During the solder dip time the part may be moved horizontally in molten solder so that the withdrawal from the solder can be at a different location from the immersion to avoid contamination of the fresh solder coating by the residual flux from the leads. After the dipping process, the part shall be allowed to cool in air. Flux residue shall be removed from the terminations by rinsing in a suitable solvent. If necessary, a soft cloth or cotton swab moistened with clean 91 percent isopropyl alcohol or a suitable solvent shall be used to remove all remaining flux.

c. Examination of terminations. After each dip-coated termination has been thoroughly cleaned of flux, the termination shall be examined using a magnification of 10X.

4.8.7 Resistance to solvents (see 3.12). Networks shall be tested in accordance with method 215 of MIL-STD-202. The following details shall apply:

a. Mounting: Unmounted.

b. The marked portion of the network body shall be brushed.

c. The number of sample units shall be as specified in table XII or table XVI, as applicable.

d. Networks shall be inspected for mechanical damage and legibility of markings.

4.8.8 Resistance-temperature characteristic (see 3.13). Networks shall be tested in accordance with method 304 of MIL-STD-202. The following details and exceptions shall apply:

a. Mounting: Method A or method B (see 4.8.1).

b. Reference temperature: Room ambient temperature.

c. Test temperature: In accordance with table XIX.

TABLE XIX. Resistance-temperature characteristic.

Sequence	Temperature in ^{O}C	
	Qualification inspection	Group B inspection
1	25 ±3 1/	25 ±3 1/
2	-15 ±3	-55 ±3
3	-55 ±3	25 ±3 1/
4	25 ±3 1/	125 ±3
5	65 ±3	
6	125 ±3	

1/ This temperature shall be considered the reference temperature for each of the succeeding temperatures.

NOTE: At the option of the manufacturer, group B inspection may be in the reverse sequence of table XIX as follows:

1. 25°C
2. 125°C
3. 25°C
4. -55°C

±3°C.

4.8.9 Low temperature operation (see 3.14). Resistors shall be mounted as specified in 4.8.1, method A or method B. Following a dc resistance measurement as specified in 4.8.5, the networks shall be placed in a cold chamber at -65°C +0°C, -5°C. After 1 hour of stabilization at this temperature, full rated continuous working voltage as specified in 3.7 shall be applied for 45 minutes +5 minutes, -0 minutes. The networks may be loaded individually or in parallel. Fifteen minutes +5 minutes, -0 minutes after the removal of the voltage, the temperature in the chamber shall be gradually increased to room temperature within a period of not more than 8 hours. The networks shall be removed from the chamber and maintained at a temperature of 25°C ±5°C; the dc resistance shall be measured as specified in 4.8.5. Networks shall be inspected for evidence of mechanical damage.

4.8.10 Short-time overload (see 3.15). A dc test potential, 2.5 times the rated continuous working voltage, but not exceeding twice the maximum voltage (see 3.1), shall be applied for 5 seconds ±1 second to each resistor in the network, one at a time. If single resistors cannot be isolated, the voltage applied at the two terminals shall be as follows:

$$2.5\sqrt{PR}$$

Where R is the actual resistance measured at the two terminals and P is the combined power rating of the elements contributing to the measured resistance. The following conditions shall be maintained.

a. Mounting: Method A or method B (see 4.8.1).

b. Networks are to be mounted horizontally in still air with no circulation other than that created by the heat of the network being operated.

c. The resistance shall be measured as specified in 4.8.5.

d. Ambient temperature during test shall be $25^{O}C \pm 5^{O}C$.

e. After removal of the test potential, the resistance shall be measured as specified in 4.8.5. Networks shall be inspected for evidence of arcing, burning, and charring.

f. For referee purposes, a 10 second waiting period between voltage pulses shall be used.

4.8.11 Adhesion (not applicable to gullwing packages) (see 3.16). The delamination (peel) stress test shall be applied to four randomly selected solder pads from each device selected for test. Preparation and testing of devices shall be in accordance with figure 3. Pretinned soft annealed solid copper wire of a gauge (diameter) nearest, but not exceeding that of the nominal solder pad width, shall be soldered to the solder pads to be tested in a manner such that the wire is bonded over the entire solder pad length and the wire shall be bent perpendicular to the bond plane prior to attachment. Caution should be taken to assure that the solder pad metallization is not damaged during the soldering or the wire bending operation. Unless otherwise specified, a minimum tension of 50 grams shall be applied, without shock, to each solder pad to be tested in a direction perpendicular to the solder pad surface and maintained for 30 seconds minimum. When examined, using 10X magnification, after removal of the tension stress, the appearance of any delamination involving constituent solder pad interfaces shall be considered an adhesion failure of the solder pad. Separation of the solder pad from the device is an obvious (without visual magnification) adhesion failure. Separation of the wire from the solder fillet (leaving the solder pad intact) or wire breakage is considered a test procedure failure, and the test shall be repeated.

4.8.12 Terminal strength (not applicable to LCC) (see 3.17).

4.8.12.1 Pull test. Networks shall be tested as follows:

a. Test weight: 4.5 pounds.

b. Test time: 30 seconds +5 seconds, -0 second.

c. The resistance shall be measured and specified in 4.8.5.

d. Number of terminals to be tested: Five randomly selected terminals.

e. Procedure: The specified weight shall be applied, without shock, to each lead or terminal to be tested in a direction parallel to the axis of the lead (or terminal) and maintained for the specified test time. The tension shall be applied as close to the end of the lead (or terminal) as practical.

f. Measurement after test: Networks shall be inspected for evidence of mechanical damage and resistance shall be measured as specified in 4.8.5.

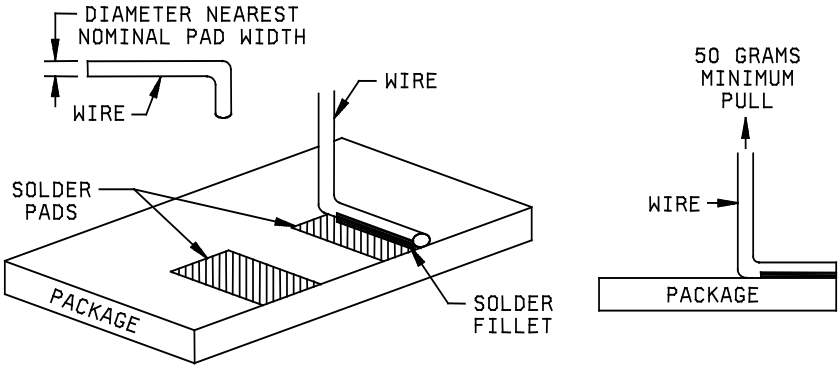

Material:
Flux: Type A or B, per J-STD-004
Solder: SN60A or SN63A, per J-STD-006
Wire: Soft Annealed Solid Copper

FIGURE 3. Adhesion test fixture.

4.8.13 Dielectric withstanding voltage (see 3.18).

4.8.13.1 Atmospheric pressure. Networks shall be tested in accordance with method 301 of MIL-STD-202. The following details shall apply:

a. Mounting: For gullwing packages, the network shall be clamped by mounting with its top on a metal plate of sufficient size to extend beyond the network extremities. An additional metal plate shall be mounted against the bottom of the network, avoiding contact with the terminals. The terminals of the network shall be connected together (see figure 4). For LCC packages, the network shall be clamped by mounting its top/bottom on a metal plate of sufficient size to cover the nonterminated body surface; care should be taken not to short out the terminations on both the top and bottom. The terminals of the network shall be contacted together (see figure 5).

b. Magnitude of test voltage: 200 volts rms.

c. Nature of potential: An ac supply at commercial-line frequency (not more than 100 hertz (Hz)) and waveform.

d. Duration of application of test voltage: 60 seconds +10 seconds, -0 seconds.

e. Points of application of test voltage: Between the terminals connected together and the metal-mounting plates.

f. Inspections and measurements: During the tests, the leakage current shall be monitored and the networks inspected for evidence of arcing and breakdown. At the conclusion of the test, networks shall be inspected for evidence of damage.

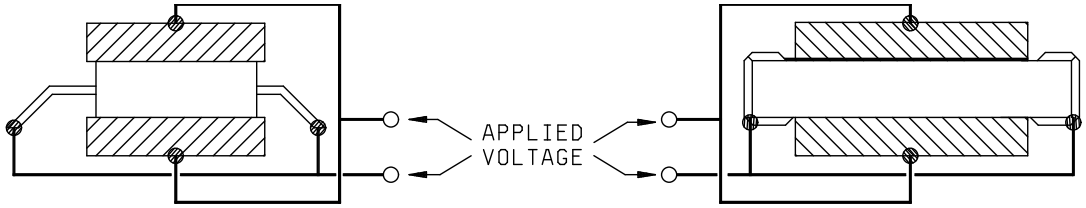

FIGURE 4. Test fixture for gullwings.

FIGURE 5. Test fixture for LCC.

4.8.14 Insulation resistance (see 3.19). Networks shall be tested in accordance with method 302 of MIL-STD-202. The following details shall apply:

a. Test condition A.

b. Special preparation: As specified in 4.8.13.1a.

c. Points of measurement: As specified in 4.8.13.1e.

4.8.15 Resistance to soldering heat (see 3.20). Networks shall be tested in accordance with method 210 of MIL-STD-202. The following details and exceptions shall apply:

a. Measurement before test: DC resistance shall be measured as specified in 4.8.5

b. Mounting and testing: Networks shall be mounted on a fiberglass test board as specified in 4.8.1, method B and test condition J except the temperature shall be 245°C ±5°C. This mounting procedure shall count as one heat cycle.

c. Second cycle: The heat cycle portion of step b above shall be repeated. (NOTE: When a hot plate is used, the temperature shall be 245°C ±5°C for 60 ±5 seconds and the temperature ramp and emersion/immersion rate does not apply).

d. Measurement after the test: After completion of the cleaning process and following a 30 minute +90 minute, -15 minute cooling period, the dc resistance shall be measured as specified in 4.8.5. The change in resistance shall not exceed the value specified in table I.

e. Examination after the test: Networks shall be examined for evidence of mechanical damage.

4.8.16 Moisture resistance (see 3.21). Networks shall be tested in accordance with method 106 of MIL-STD-202. The following details and exceptions shall apply:

a. Mounting: Method B (see 4.8.1).

b. Initial measurement: Immediately following the initial conditioning period, dc resistance of resistors in the network shall be measured as specified in 4.8.5.

c. Loading voltage: A dc voltage equivalent to 0.100 of rated wattage not to exceed the maximum rated voltage (see 3.1) shall be applied to all resistor elements during the first 2 hours of step 1 and step 4.

d. Subcycle: Step 7b shall not be applicable. Step 7a shall be performed during any five of the first eight cycles only.

e. Measurements at high humidity: None.

f. Final measurements: Upon completion of step 6 of the final cycle, the resistor networks shall be removed from the chamber and within 8 hours, the dc resistance, dielectric withstanding voltage, and insulation resistance shall be measured in accordance with 4.8.5, 4.8.13, and 4.8.14, except that dielectric withstanding voltage and insulation resistance may be performed without the bottom metal plate of figure 4 and figure 5. When the networks are tested as specified, the change in resistance between initial and final measurements shall not exceed the value specified in 3.21.

g. Inspection after test: Networks shall be inspected for evidence of mechanical damage.

4.8.17 Shock (specified pulse) (see 3.22). Networks shall be tested in accordance with method 213 of MIL-STD-202. The following details and exceptions shall apply:

a. Special mounting means: Leaded components shall be mounted by rigidly restraining the leads; leadless chip carrier packages shall be mounted by (soldering, clamping, etc.) restraining the body.

b. Test leads: Test leads used during this test shall be no larger than AWG size 22 stranded wire, so that the influence of the test lead on the resistor shall be held to a minimum. The test lead length shall be no longer than necessary.

c. Measurements before shock: Resistance shall be measured as specified in 4.8.5.

d. Test condition I.

e. Measurements after shock: Resistance shall be measured as specified in 4.8.5.

f. Inspection after shock: Networks shall be inspected for evidence of mechanical damage.

4.8.18 Vibration, high frequency (see 3.23). Networks shall be tested in accordance with method 204 of MIL-STD-202. The following details and exception shall apply:

a. Mounting: As specified in 4.8.17a.

b. Test leads: As specified in 4.8.17b.

c. Measurements before vibration: As specified in 4.8.17c.

d. Test condition D.

e. Measurements after vibration: As specified in 4.8.17e.

f. Inspection after vibration: Networks shall be inspected for evidence of mechanical damage.

4.8.19 Life (see 3.24). Networks shall be tested in accordance with method 108 of MIL-STD-202. The following details and exceptions shall apply:

a. Mounting: As specified in 4.8.1, method B. If forced air circulation is employed, the air velocity shall not exceed 500 feet per minute and there shall be no direct impingement of the forced-air supply upon the networks.

b. Test temperature and tolerance:

(1) Qualification inspection: $70^{O}C \pm 5^{O}C$.

(2) FR determination: $70^{O}C \pm 5^{O}C$.

c. Initial measurements: Measurements shall be made inside or outside the chamber.

(1) Inside of chamber: When measurements are to be made inside the chamber, the initial dc resistance shall be measured at the applicable test temperature, after temperature stabilization, and within 8 hours of exposure of the resistor networks to the test temperature. This initial measurement shall be used as the reference temperature for all subsequent measurements under the same condition.

(2) Outside of chamber: When measurements are to be made outside the chamber, the initial dc resistance shall be measured at room temperature. This initial measurement shall be used as the reference temperature for all subsequent measurements under the same condition.

d. Operating conditions: Rated dc continuous working voltage, filtered or nonfiltered full-wave rectified ac voltage, shall be simultaneously applied to each resistor in the network intermittently, one and one-half hours "on" and one-half hour "off", for the specified number of hours and at the test temperature. During the "on" cycle, the voltage shall be regulated and controlled to maintain the rated continuous working voltage within ±5 percent. In no case shall the network power rating be exceeded.

e. Test condition: 2,000 hours elapsed time for qualification inspection with all samples continued to 10,000 hours; 10,000 hours for FRL inspection of group C.

f. Measurements during test:

(1) Qualification inspection: DC resistance shall be measured at the end of the one-half hour “off” periods after 250 hours +72 hours, -24 hours; 500 hours +72 hours, -24 hours; 1,000 hours +72 hours, -24 hours; 2,000 hours, +96 hours, -0 hours have elapsed.

(2) Extended life testing: DC resistance shall be measured at the end of one-half hour “off” period after 250 hours +72 hours, -24 hours; 500 hours +72 hours, -24 hours; 1,000 hours +72 hours, -24 hours; 2,000 hours +96 hours, -24 hours; and every 2,000 hours +96 hours, -24 hours thereafter until required 10,000 hours +120 hours, -0 hours have elapsed. Measurements shall be made as near as possible to the specified time but may be adjusted so that measurements need be made only during the normal workday.

(3) Measurements outside of chamber: When measurements are made outside the chamber, networks shall be outside of the chamber for a minimum of 45 minutes and stabilized before measurement.

g. Inspection after test: Networks shall be inspected for evidence of mechanical damage.

4.8.20 High temperature exposure (see 3.25).

a. Mounting: Not required.

b. Initial measurements: DC resistance shall be measured as specified in 4.8.5 at 25°C ±2^{O}C.

c. Procedure: Following initial resistance measurements, networks shall be placed in a chamber with forced air circulation maintained at 125°C ±5°C for a period of 100 hours ±4 hours with no load applied.

d. Final measurements: After removal from the test chamber, networks shall be permitted to stabilize at an ambient temperature of 25°C ±5°C. Resistance measurements shall be made as specified in 4.8.5. Networks shall be inspected for evidence of mechanical damage.

4.8.21 Low temperature storage (see 3.26).

a. Mounting: Not required.

b. Procedure: DC resistance shall be measured as specified in 4.8.5. Within 1 hour after this measurement, the networks shall be placed in a cold chamber at -65°C +0°C, -3°C. Twenty-four hours after the networks have reached this temperature, the temperature of the chamber shall be gradually increased to room temperature within a period of not more than 8 hours. The networks shall be removed from the chamber and at a temperature of 25°C ±5°C, the dc resistance shall then be measured as specified in 4.8.5. Networks shall be inspected for evidence of mechanical damage.

4.8.22 Hermetic seal (applicable to characteristic C) (see 3.27). Networks shall be tested in accordance with method 112 of MIL-STD-202. The following details shall apply:

a. Test condition C, procedure IIIa or IIIb of method 112, MIL-STD-202 shall be used.

b. Gross leak test: Test condition D.

4.8.23 Steady-state humidity (see 3.28). Networks shall be tested at a steady state humidity condition of 85°C ±3°C, 85 percent ±5 percent relative humidity for a period of 1,000 hours +96 hours, -0 hours. The following details and exceptions shall apply:

a. Mounting: Method B (see 4.8.1.2).

b. Initial measurement: Same as 4.8.16b.

c. Loading voltage: Same as 4.8.16c.

d. Interval measurement is at 1,000 hours +96 hours, -0 hours. The networks will be allowed to stabilized to room ambient conditions prior to any electrical measurement.

e. Final measurements: Same as 4.8.16f.

f. Inspection after test: Same as 4.8.16g.

4.8.24 Bond pull (applicable to configuration C of styles RNS030 and RNS040) (see 3.29). Networks shall be mounted as specified in 4.8.1.2, method B. Pull tester/gauge and hook, (HMP model, with a 0 gram to 15 gram scale or equivalent) shall be used. All wire bonds are to be visually inspected to confirm acceptability prior to pull test (see 3.5.5). Four bonding pads shall be randomly selected and shall be subjected to the bond pull test as specified. The pull test is applied by inserting the hook under the loop of the bonding wire and with the substrate held down, the pulling force is applied approximately at the center of the loop for 30 seconds minimum at a minimum force of 6 grams

4.8.25 Fungus (see 3.30). Networks shall be tested in accordance with method 508 of MIL-STD-810. Networks shall be inspected for evidence of fungus.

5. PACKAGING.

5.1 Packaging. For acquisition purposes, the packaging requirements shall be as specified in the contract or order (see 6.2). When packaging of materiel is to be performed by DoD or in-house contractor personnel, these personnel need to contact the responsible packaging activity to ascertain packaging requirements. Packaging requirements are maintained by the Inventory Control Point's packaging activity within the Military Service or Defense Agency, or within the military services system commands. Packaging data retrieval is available from the managing Military Department's or Defense Agency's automated packaging files, CD-ROM products, or by contacting the responsible packaging activity.

6. NOTES

(This section contains information of a general or explanatory nature that may be helpful, but is not mandatory).

6.1 Intended use. Networks described herein are intended to be used in surface mount applications.

6.2 Acquisition requirements. Acquisition documents must specify the following:

a. Title, number, and date of this specification, and the complete PIN (see 1.2).

b. Unless otherwise specified (see 2.1), the versions of the individual documents referenced will be those in effect on the date of release of the solicitation.

c. Packaging instructions (see 5.1) (e.g., Electrostatic discharge (ESD) sensitivity (see 6.4.3))

d. Allowable substitution (see 3.31.3, through 3.31.5, inclusive).

6.3 Qualification. With respect to products requiring qualification, awards will be made only for products which are, at the time of award of contract, qualified for inclusion in Qualified Products List QPL No. 914 whether or not such products have actually been so listed by that date. The attention of the contractors is called to these requirements, and manufacturers are urged to arrange to have the products that they propose to offer to the Federal Government tested for qualification in order that they may be eligible to be awarded contracts or orders for the products covered by this specification. Information pertaining to qualification of products may be obtained from Army Standardization Program Lead Engineering Operations Division (PRD), ATTN: CERDEC, Pod 153, Bldg. 6010, Aberdeen Proving Ground, MD 21005; however, information pertaining to qualification of products may be obtained from the DLA Land and Maritime, ATTN: VQP, Post Office Box 3990, Columbus, OH 43218-3990. An online listing of products qualified to this specification may be found in the Qualified Products Database (QPD) at https://assist.dla.mil or http://www.landandmaritime.dla.mil/Programs/QmlQpl/.

6.4 Application notes.

6.4.1 Close-tolerance networks. Close tolerance networks (i.e., 0.1 percent and tighter) should be mounted by a method which produces the least heating effect over a short time to avoid permanent change in resistance.

6.4.2 Tin whisker growth. The use of alloys with tin content greater than 97 percent, by mass, may exhibit tin whisker growth problems after manufacture. Tin whiskers may occur anytime from a day to years after manufacture and can develop under typical operating conditions, on products that use such materials. Conformal coatings applied over top of a whisker-prone surface will not prevent the formation of tin whiskers. Alloys of 3 percent lead, by mass, have shown to inhibit the growth of tin whiskers. For additional information on this matter, refer to ASTM-B545 (Standard Specification for Electrodeposited Coatings of Tin).

6.4.3 Electrostatic charge. Under several combinations of conditions, these resistors can be electrically damaged, by electrostatic charges, and drift from specified value. Users should consider this phenomena when ordering or shipping resistors. Direct shipment to the Government is controlled by MIL-DTL-39032 that specifies a preventive packaging procedure.

6.4.4 Pulse applications. Designers are CAUTIONED on using these resistors in pulse applications. These resistors only see a one time pulse (Short-time overload) as part of the group B inspection. These resistors are subject to damage and premature failures when they see excessive pulsing.

6.5 Hermetic seal (applicable to characteristic C). For hermetic seal networks, materials used for this enclosure can be ceramic, metal, glass, or combinations thereof. Internal construction should consist of wire bond and die.

6.6 Subject term (key word) listing.

Gullwing
Leaded
Leadless chip carrier

6.7 Environmentally preferable material. Environmentally preferable materials should be used to the maximum extent possible to meet the requirements of this specification. As of the dating of this document, the U.S. Environmental Protection Agency (EPA) is focusing efforts on reducing 31 priority chemicals. The list of chemicals and additional information is available on their website http://www.epa.gov/osw/hazard/wastemin/priority.htm. Use of these materials should be minimized or eliminated unless needed to meet the requirements specified herein (see Section 3).

6.8 Amendment notification. The margins of this specification are marked with vertical lines to indicate modification generated by this amendment. This was done as a convenience only and the Government assumes no liability whatsoever for any inaccuracies in these notations. Bidders and contractors are cautioned to evaluate the requirements of this document based on the entire content irrespective of the marginal notations and relationship.

APPENDIX A

PROCEDURE FOR QUALIFICATION INSPECTION

A.1. SCOPE

A.1.1 Scope. This appendix details the procedure for submission of samples, for qualification inspection of networks covered by this specification. The procedure for extending qualification of the required sample to other networks covered by this specification is also outlined herein. This appendix is a mandatory part of the specification. The information contained herein is intended for compliance.

A.2 APPLICABLE DOCUMENTS

A.2.1 Government documents.

A.2.1.1 Specifications, standards, and handbooks. The following specifications, standards, and handbooks form a part of this document to the extent specified herein. Unless otherwise specified, the issues of these documents are those cited in the solicitation (see 6.2).

DEPARTMENT OF DEFENSE STANDARDS

MIL-STD-1276	-	Leads for Electronic Component Parts

(Copies of these documents are available online at http://quicksearch.dla.mil).

A.2.2 Order of precedence. Unless otherwise noted herein or in the contract, in the event of a conflict between the text of this document and the references cited herein (except for related specification sheets), the text of this document takes precedence unless otherwise noted. Nothing in this document, however, supersedes applicable laws and regulations unless a specific exemption has been obtained.

A.3 SUBMISSION

A.3.1 Product levels. Qualification of the C (non-ER) level, is predicated upon meeting the ER qualification requirements for FRL M (see A.4.1). The procedure for submitting samples to become qualified to the initial FRL M is specified in A.3.2.

A.3.2 Sample. A sample consisting of 287 (ER) sample units of each resistance value (lowest, highest, and critical or nearest to critical value) (see table A-I) and in each style, characteristic, resistance tolerance, and schematic for which qualification is sought shall be submitted and subjected to the test of table XII. (NOTE: If fungus testing is certified, only 277 (ER) sample units are required.) For group II 5 samples of any resistance value shall be tested. For group III, 12 samples of any resistance value shall be tested. For group IVA, 8 samples of any resistance value shall be tested. For group IV, group V, group VI, group VII and group VIII, samples of resistance values shall be selected in accordance with table XII (e.g., group IV; 10 high, 10 critical, 10 low). To qualify a resistance range after initial qualification, the range extension at higher or lower values will be qualified by supplemental testing of the new highest or lowest value in accordance with the following: Submit 84 additional samples of new resistance value to be qualified to group I and group IA of table XII; of this group, 10 samples to group IV, 10 samples to group V, 10 samples to group VI, 34 samples to group VII, 10 samples to group VIII, 10 samples to group IX. An additional sample submission is required under the following conditions:

a. Qualification to closer tolerance than submitted above is desired:

Submit

30 additional samples of the closer tolerance to be qualified to group I.	10 high value 10 critical value 10 low value

b. Qualification to "J" or "S" schematics by schematic A, B, C, M, P, E, or W submission is desired:

Submit:

50 additional samples of schematic "J" or "S" all to group I, and 10 each to group IV, group V, group VII, group VIII and group IX.	50 critical or closest to critical value

c. To obtain characteristic C in the original qualification, an additional 38 units of the critical value only shall be submitted to all of group I of table XII testing, 8 units to group IVA and 10 units each to group IV, group V, and group VI.

After qualification has been granted, no changes shall be made in materials, design, or construction without proper notification to the qualifying activity.

A.4 EXTENT OF QUALIFICATION

A.4.1 Extension of qualification. The resistance range included in the qualification of any one network style will be between the lowest and highest resistance values which pass the qualification inspection (see 3.1). Qualification of one characteristic is basis for qualification of another characteristic as indicated in table A-II. Qualification of the lower resistance tolerances will qualify for the higher resistance tolerances in accordance with table A-III. Extent of qualification by style shall be in accordance with A-IV. Extent of qualification by schematic shall be in accordance with table A-V. As a requisite for extension of qualification as described herein between characteristics, tolerances, schematics, and resistance values, the product involved must be manufactured using the same facilities, processes, and materials as the product originally submitted for qualification.

APPENDIX A

TABLE A-I. Critical resistance value for qualification inspection. 1/ 2/

Schematic	Style					
	RNS030		RNS040		RNS050	
	C, R, V, H	K, M	C, R, V, H	K, M	C, R, V, H	K, M
A					50.0k	25.0k
B					100.0k	50.0k
C					50.0k	25.0k
E	50.0k	25.0k	50.0k	25.0k		
J					166.0k	50.0k
M	100.0k	50.0k	100.0k	50.0k		
P			50.0k	25.0k		
S	50.0k	25.0k	166.0k	50.0k		
W	50.0k	25.0k				

1/ Maximum continuous working voltage shall be applied (see 3.1).
2/ The critical resistance value is the maximum standard resistance value which dissipates full wattage when the maximum continuous working voltage is applied.

TABLE A-II. Extent of qualification of characteristics.

Characteristic submitted	Characteristic qualified
C	C, V, H
R	R, V, H, C 1/
V	V, H, C 1/
H	H
K	K, M
M	M

1/ See A.3.2.c.

TABLE A-III. Extent of qualification of resistance tolerance.

Resistance tolerance submitted	Resistance tolerance qualified
B	B, D, F, G, J
D	D, F, G, J
F	F, G, J
G	G, J
J	J

TABLE A-IV. Extent of qualification by style.

Style	Will qualify style(s)
RNS030	RNS030
RNS040	RNS030, RNS040
RNS050	RNS050

APPENDIX A

TABLE A-V. Extent of qualification by schematic.

Schematic	Will qualify schematic(s)	Schematic	Will qualify schematic(s)	Schematic	Will qualify schematic(s)
S	S	E	E, W, P	A	A, C
M	M, P, E, W	W	W, E	B	B, C, A
P	P, E, W	J	J	C	C, A

A.5 SOLDER DIP (RETINNING) LEADS

A.5.1 Solder dip (retinning) leads. The manufacturer (or authorized category B or category C distributor) may solder dip/retin the leads of product supplied to this specification provided the solder dip process of this appendix or an equivalent process has been approved by the qualifying activity.

(NOTE: Solder dip of termination A, termination B, termination C, and termination Z is not allowed).

A.5.2 Qualifying activity approval. Approval of the solder dip process will be based on one of the following options:

a. When the original lead finish qualified was hot solder dip lead finish 52 of MIL-STD-1276. (NOTE: The 200 micro inch maximum thickness is not applicable). The manufacturer shall use the same solder dip process for retinning as is used in the original manufacture of the product.

b. When the lead originally qualified was not hot solder dip lead finish 52 of MIL-STD-1276 as prescribed in A.5.2a, approval for the process to be used for solder dip shall be based on the following test procedure:

(1) Thirty samples of any resistance value for each style and lead finish are subject to the manufacturer's solder dip process. Following the solder dip process, the resistors are subjected to the dc resistance test (and other group A electricals). No defects are allowed.

(2) Ten of the 30 samples are then subjected to the solderability test. No defects are allowed.

(3) The remaining 20 samples are subjected to the resistance to bonding exposure test followed by the moisture resistance test. No defects are allowed.

A.5.3 Solder dip/retinning options. The manufacturer (or authorized category B or category C distributor) may solder dip/retin as follows:

a. After the 100 percent group A screening tests and before group A solderability test: Following the solder dip/retinning process, the electrical measurements required in group A, subgroup 1, 100 percent screening tests shall be repeated on 100 percent of the lot. (NOTE: The manufacturer may solder dip/retin prior to the 100 percent electrical measurements of the group A, subgroup 1 tests). The percentage defective allowable (PDA) for the electrical measurements shall be as for the subgroup 1 tests.

b. As a corrective action, if the lot fails the group A solderability test: The lot may be retinned no more than two times. The lot after retinning shall be 100 percent screened for group A electrical requirements (dc resistance).Any parts failing (lot not exceeding PDA for group A, subgroup 1, see 4.6.3.2.1) these screens shall not be supplied to this specification. If electrical failures exceeding 1 percent of the lot are detected after the second retinning operation, the lot shall not be supplied to this specification.

c. After the group A inspection has been completed: Following the solder dip/retinning process, the electrical measurements required in group A, subgroup 1, 100 percent screening test shall be repeated on 100 percent of the lot. The PDA for the electrical measurements shall be as for the subgroup 1 tests. Following these tests, the manufacturer shall submit the lot to the group A solderability test as specified in 4.6.3.2.4.

APPENDIX B

DIE AND WIRE BOND INSPECTION

B.1. SCOPE

B.1.1 Scope. This appendix details the procedure for die and wire bond construction of networks covered by this specification. The procedure for inspecting die and wire bond construction networks covered by this specification is outlined herein. This appendix is not a mandatory part of the specification. The information contained herein is intended for guidance only.

B.2 APPLICABLE DOCUMENTS

This section is not applicable to this appendix.

B.3 INSPECTION

B.3.1 Die inspection.

B.3.1.1 Die alignment. The die should be centrally located within the die cavity of the chip carrier.

B.3.1.2 Die attach. Die attach material such as solder, alloy material or adhesive should be visible around at least 50 percent of the die perimeter. Die material extending up the wall of the die cavity, or side of the die (network), should not be within 2 mils of wire, wire bonds, wire bond pads, or operating metallization.

B.3.1.3 Die and die cavity defects. Any flaking, cracking, peeling, or lifting of the adhesive material should be cause for rejection.

B.3.2 Wire bond inspection.

B.3.2.1 Wire bond clearance. Each wire should have a 2 mil clearance from any exposed operating metallization or other wires (excluding wires designated to the same bond pad, or any wall of the package, including the lid).

B.3.2.2 Wire bond nicks, bends, and cuts. Nicks, bends, cuts or other defects should not reduce the diameter of the wire by more than 25 percent anywhere along its length. Manufacturer has the option of 100 percent screen to remove the defected units from the production lot. A second 5 piece sample should be randomly selected. If there any failures the lot shall be rejected.

B.3.2.3 Wire bond adhesion. Five networks should be subjected to the wire bond pull in accordance with 4.8.24 with zero defects allowed. Production lots failing to meet the criteria of 3.29 should not be furnished against the requirements of this specification. Manufacturer has the option of 100 percent screen to removed defected unit from the production lot. A second 5 piece sample should be randomly selected. If any failures the lot shall be rejected.

B.3.2.4 Wire bond placement. All bonds should be confined within the perimeter of the bond pads.

B.3.2.5 Wire bond diameter. Ball bonds should not be less than 2 times or greater than 5 times the wire diameter. Wedge bonds should not be less than 1.2 times or greater than 2.5 times the wire diameter in width, and not less than 1.5 times or greater than 5 times the wire diameter in length.

B.3.2.6 Wire bond defects. There should be no evidence of peeling, lifting, delamination, corrosion, contamination, or discoloration of the wire, wire bond, or the wire bond pads.

Custodians:
Army - CR
Navy - EC
Air Force - 85
DLA - CC

Review activities:
Army - AR, AT, AV, CR4, MI
Navy - AS, CG, MC, OS
Air Force - 19
NASA - NA

Preparing activity:
Army - CR

Agent:
DLA - CC

(Project 5905-2014-027)

NOTE: The activities listed above were interested in this document as of the date of the this document. Since organizations and responsibilities can change, you should verify the currency of the information above using the Assist Online database at https://assist.dla.mil.