INCH-POUND

MIL-PRF-8805/11J
4 October 2004

SUPERSEDING
MIL-PRF-8805/11H
3 September 1999

PERFORMANCE SPECIFICATION SHEET

SWITCHES, SENSITIVE-MOMENTARY, 2 CIRCUIT, 10 AMPERES, UNSEALED

This specification is approved for use by all Departments and Agencies of the Department of Defense.

The complete requirements for acquiring the switches described herein shall consist of this specification and the latest issue of MIL-PRF-8805.

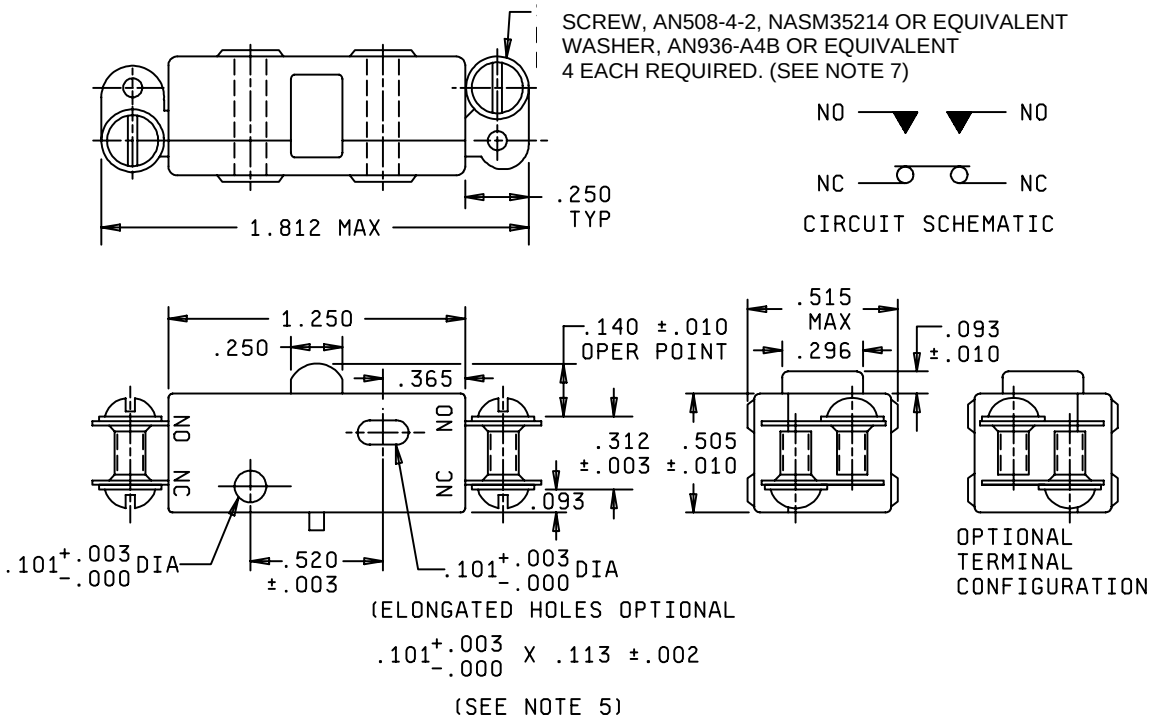

MS25344-I

FIGURE 1. Dimensions and configurations.

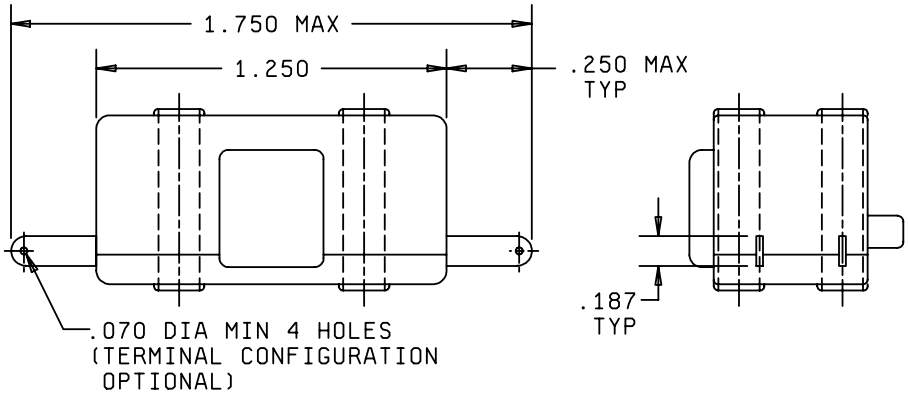

MS25342-1

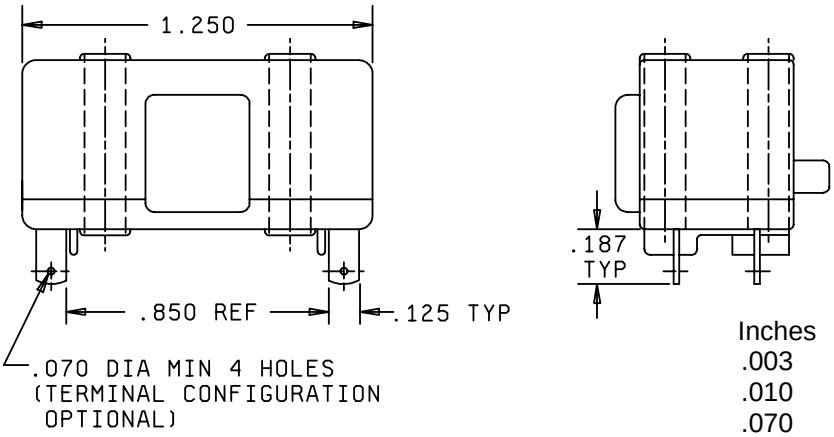

MS25343-1

Inches	mm	Inches	mm
.003	0.08	.312	7.92
.010	0.25	.365	9.27
.070	1.78	.505	12.83
.093	2.36	.515	13.08
.101	2.57	.520	13.21
.125	3.18	.850	21.59
.140	3.56	1.250	31.75
.187	4.75	1.750	44.45
.250	6.35	1.812	46.02
.296	7.52		

NOTES:
1. Dimensions are in inches.
2. Unless otherwise stated, tolerance is ±.015 (0.38 mm).
3. Exact shape of switch optional provided dimensions specified are not exceeded.
4. Metric equivalents are given for general information.
5. Dimensions shown are case mounting holes. Cover mounting holes may exceed these dimensions.
6. Dimensions specified for MS25344-1 are applicable to MS25342-1 and MS25343-1, unless otherwise indicated.
7. Alternative base metals and protective finishes, as approved by the qualifying activity, may be utilized for screw and washer material. Dimensions shall be in accordance with referenced hardware specification.
8. MS25342, MS25343, and MS25344 were superseded by MIL-PRF-8805/11, the MS25342, MS25343, and MS25344 Part Numbers (PINS) were retained.

FIGURE 1. Dimensions and configurations (continued)

REQUIREMENTS:

Dimensions and configurations: See figure 1.

Enclosure design: 1 (unsealed).

Temperature characteristic: 1 (-55°C to +85°C).

Shock type: M (100 g).

Vibration grade: 1 (10 to 500 Hz)

Weight: .03 pound maximum.

Dielectric withstanding voltage: 1,000 V rms. After electrical endurance, the dielectric withstanding voltage points of application between all unconnected terminasl of the same pole is not applicable.

Operating characteristics:

Actuating force ..... 1.25 pounds maximum

Movement differential..... .027 inch maximum.
Pretravel..... .060 inch maximum.
Overtravel..... .015 inch minimum.
} ±20 percent variation from specified values acceptable after test.

Operating point..... See figure 1.

Terminal strength: 5 pounds.

Strength of actuating means: 25 pounds.

Mechanical endurance: 100,000 cycles at .015 + .001, -.000 inch overtravel.

Electrical endurance: 50,000 cycles.

Electrical ratings: See table I.

Qualification:

Group submission: See table II.

Part Number: See table III.

TABLE I. Electrical ratings.

Load	Sea level	
	28 V dc	115 V ac, 400 Hz
	amperes	amperes
Resistive	10	10
Inductive	10	10
Lamp	6	6

TABLE II. Group submission.

Examination or test	Basic switch	Other switch samples	Extent of approval
Qualification inspection table of MIL-PRF-8805	MS25344-1 (all sample units)	MS25342-1 MS25343-1 (3 sample units) Visual and mechanical examination	All

NOTE: MS25342, MS25343, and MS25344 were superseded by MIL-PRF-8805/11, the MS25342, MS25343, and MS25344 Part Numbers (PINS) were retained.

TABLE III. Part numbers and characteristics.

Part number	Terminal configuration
MS25343-1	Side solder terminal
MS25342-1	End solder terminal
MS25344-1	End screw terminal

Referenced Documents:
MIL-PRF-8805
NASM35214

Custodians:
Air Force - 11
Army - CR
DLA - CC
Navy - EC

Review activities:
Air Force - 19, 99
Army - AR, AV, MI
Navy - AS, OS, MC, SH

Preparing activity:
DLA - CC

(Project 5930-1838)

NOTE: The activities listed above were interested in this document as of the date of this document. Since organizations and responsibilities can change, you should verify the currency of the information above using the ASSIST Online database at www.dodssp.daps.mil.