INCH-POUND

MIL-PRF-83532E
26 August 2013
SUPERSEDING
MIL-PRF-83532D
29 September 2008

PERFORMANCE SPECIFICATION

DELAY LINES, ACTIVE
GENERAL SPECIFICATION FOR

This specification sheet is approved for use by all
Departments and Agencies of the Department of Defense.

1. SCOPE

1.1 Scope. This specification covers the general requirements for fixed (tapped and untapped) pulse delay lines.

1.2 Classification.

1.2.1 Part or Identifying Number (PIN). The PIN will be as shown in the following example:

M	83532/01	A	001	B	C
Military level M or C (see 1.2.2)	Specification sheet	Case outline A,B,C,D,E, or F (see appendix)	Dash number	Product level A, B, or S (see 1.2.3)	Lead finish (see 3.4.5.1)

1.2.2 Military level. The military designator is identified by a single letter M, or C. M is for high reliability military applications, and C is for general purpose military applications.

1.2.3 Product level. The product level is identified by a single letter A, B, or S. Levels A and B are for high reliability military applications. Level S is for high reliability space applications.

2. APPLICABLE DOCUMENTS

2.1 General. The documents listed in this section are specified in sections 3 and 4 of this specification. This section does not include documents cited in other sections of this specification or recommended for additional information or as examples. While every effort has been made to ensure the completeness of this list, document users are cautioned that they must meet all specified requirements of documents cited in sections 3 and 4 of this specification, whether or not they are listed.

Comments, suggestions or questions on this document should be addressed to DLA Land and Maritime, ATTN: VAT, Post Office Box 3990, Columbus, OH 43218-3990, or emailed to Relay@dla.mil. Since contact information can change, you may want to verify the currency of this address information using the ASSIST Online database at https://assist.dla.mil.

AMSC N/A FSC 5999

2.2 Government documents.

2.2.1 Specifications, standards, and handbooks. The following specifications, standards, and handbooks form a part of this document to the extent specified herein. Unless otherwise specified, the issues of these documents are those cited in the solicitation or contract.

DEPARTMENT OF DEFENSE SPECIFICATIONS

MIL-PRF-123 - Capacitors, Fixed, Ceramic Dielectric, (Temperature Stable and General Purpose), High Reliability, General Specification For.
MIL-PRF-19500 - Semiconductor Device, General Specification for.
MIL-PRF-38534 - Hybrid Microcircuits, General Specification for.
MIL-PRF-38535 - Integrated Circuits (Microcircuits) Manufacturing, General Specification for.
MIL-PRF-55342 - Resistors, Chip, Fixed, Film, Nonestablished Reliability, Established Reliability, Space Level, Performance Specification for.
MIL-PRF-55681 - Capacitor, Chip, Multiple Layer, Fixed, Ceramic Dielectric, Established Reliability and Nonestablished Reliability , General Specification For.

DEPARTMENT OF DEFENSE STANDARDS

MIL-STD-202 - Electronic and Electrical Component Parts.
MIL-STD-790 - Established Reliability and High Reliability Qualified Products List (QPL) Systems for Electrical, Electronic, and Fiber Optic Parts Specifications.
MIL-STD-810 - Environmental Engineering Considerations and Laboratory Tests.
MIL-STD-883 - Microelectronics.
MIL-STD-1285 - Marking of Electrical and Electronic Parts.

(Copies of these documents are available online at http://quicksearch.dla.mil or from the Standardization Document Order Desk, 700 Robbins Avenue, Building 4D, Philadelphia, PA 19111-5094.)

2.3 Non-Government publications. The following documents form a part of this document to the extent specified herein. Unless otherwise specified, the issues of these documents are those cited in the solicitation or contract.

AMERICAN NATIONAL STANDARDS INSTITUTE (ANSI)

ANSI/EIA 557-B - Statistical Process Control Systems.

(Copies of this document are available online at www.ansi.org or from American National Standards Institute (ANSI), 11 West 42nd Street, New York, NY 10036-8002.)

ELECTRONIC COMPONENTS ASSOCIATION (ECA)

ECA/EIA - 242 - Definitions for Electromagnetic Delay Line.

(Copies of this document may be purchased from ECA - Electronic Components Association, 2214 Rock Hill Rd., Suite 170, Herndon, VA 20170, http://www.eciaonline.org/.

INTERNATIONAL ORGANIZATION FOR STANDARDS (ISO)

ISO 10012 - Measurement management systems - Requirements for measurement processes and measuring equipment.
ISO/IEC 17025 – General requirements for the competence of testing and calibration laboratories.

(Copies of this document are available online at www.ansi.org or from American National Standards Institute (ANSI), 11 West 42nd Street, New York, NY 10036-8002.)

2.4 Order of precedence. Unless otherwise noted herein or in the contract, in the event of a conflict between the text of this document and the references cited herein (except for related specification sheets), the text of this document takes precedence. Nothing in this document, however, supersedes applicable laws and regulations unless a specific exemption has been obtained.

3. REQUIREMENTS

3.1 Specification sheets. The individual item requirements shall be as specified herein and in accordance with the applicable specification sheet. In the event of any conflict between the requirements of this specification and the specification sheet, the latter shall govern.

3.2 Qualification. Delay lines furnished under this specification shall be products which are authorized by the qualifying activity for listing on the applicable qualified products list (QPL) before contract award (see 4.4 and 6.3).

3.3 QPL system. Product level A delay lines shall be subjected to, and pass, all applicable requirements, tests, and inspections described herein, including qualification and conformance inspection requirements. Requirements for this system are specified in MIL-STD-790. Product levels B and S shall be subjected to and pass all applicable requirements, tests, and inspections specified in MIL-PRF-38534 including qualification, conformance inspections, ESD and SPC measures. Military level C parts must meet the inspection requirements of 4.6.1.2.1.

3.3.1 Statistical process control (SPC). (for level B and S, see 3.3) As part of the overall MIL-STD-790 QPL system, the manufacturer shall establish an SPC system that meets the requirements of ANSI/EIA-557-B.

3.3.2 Electrostatic sensitive discharge (ESD) control program. (for level B and S, see 3.3) As part of the overall MIL-STD-790 QPL system, the manufacturer shall establish and maintain an ESD control system. As a minimum, this program shall address the identification of ESD sensitive (ESDS) sub-components and end items, facilities, training, design protection, handling procedures, marking, cleaning, packaging, and verification.

3.3.2.1 ESD identifier / index mark. Delay lines supplied to this specification are considered to be ESD class 1 devices susceptible to ESD voltages of 0 volt to 1,999 volts. Delay lines shall be marked on top, over pin 1, with a single equilateral triangle (Δ) ESD identifier (see 3.21.2c and appendix).

3.4 Materials. The materials used in construction of active delay lines shall be nonnutrient to fungus and shall not blister, outgas, soften, flow or show defects that adversely affect storage, operation at rated conditions, or environmental capabilities.

3.4.1 Flammable materials. Materials used in the construction of delay lines shall be nonflammable and nonexplosive.

3.4.2 Corrosive materials. Corrosive materials used in any of the manufacturing processes shall be removed or neutralized so that no corrosion will result from such use. Materials used in the construction of delay lines shall be noncorrosive.

3.4.3 Solder and soldering flux. Solder and soldering flux shall be of such quality as to enable the delay lines to meet all the requirements of this specification.

3.4.4 Case material. Unless otherwise specified (see 3.1), cases may be of metallic or nonmetallic material. All metallic surfaces shall be protected against corrosion by a suitable finish and shall be free from blisters and other defects which may affect the protective value of this finish. For level B, the cases shall be hermetically sealed.

3.4.5 Terminals. Terminals shall be solder lug terminals, printed-circuit and dual-in-line terminals, or solid-wire lead terminals, as specified (see 3.1). All solder type terminals shall be capable of complying with the solderability requirements of this specification.

3.4.5.1 Lead finish. Lead frame or terminal material shall be in accordance with MIL-PRF-38534. The lead finish shall conform to one of the following finishes and as specified in 3.1. (NOTE: Pure tin finish shall not be used for any internal or external package surface or as a lead finish. In addition, pure tin plating shall not be used as an undercoat.):

Finish letter	Lead frame or terminal material and finish
A	Type A, B, or C, with hot solder dip
B	Type A, B, or C, with tin-lead plate
C	Type A, B, or C, with gold plate

3.4.5.2 Meniscus. Leads shall be free of case meniscus and other foreign material and shall be solderable for a minimum of .010 inch (0.25 mm) above the seating plane of the delay line.

3.4.6 Components. All component parts used in the construction of active delay lines, specified herein or not specified, shall be of such quality as to ensure the delay line meets all performance requirements. Product levels B and S shall meet element evaluation requirements of MIL-PRF-38534.

3.4.6.1 Passive circuit elements. For level A, capacitors shall be screened to MIL-PRF-123 or MIL-PRF-55681. Resistors shall be screened to MIL-PRF-55342.

3.4.6.2 Discrete semiconductor devices. For level A, discrete semiconductor devices, including diodes, zener diodes, and transistor devices, shall be tested to and meet the screening requirements of MIL-PRF-19500.

3.4.6.3 Integrated circuits (IC). For level A, all IC's shall be tested to and meet the screening requirements of MIL-PRF-38535.

3.4.7 Pure tin. Use of pure tin, plating or otherwise, is prohibited internally and externally (see 6.6). Use of tin-lead finishes are acceptable provided that the minimum lead continent is 3 percent. Acceptance or approval of any constituent material shall not be construed as a guaranty of the acceptance of the finished product (see 4.7.1). When materials are not specified, materials shall be used which enable the delay line to meet the performance requirements of this specification. Acceptance or approval of any constituent material shall not be construed as a guarantee of the acceptance of the finished product.

3.5 Interface and dimensions. Delay lines shall meet the interface and physical dimensions as specified in the applicable specification sheet (see 3.1).

3.5.1 Dimensions (see 4.7.2). When delay lines are inspected in accordance with 4.7.2, the dimensions shall be within the tolerances specified on the specification sheet (see 3.1).

3.5.2 Visual inspection (see 4.7.3). There shall be no evidence of flaking, pitting, blistering, peeling, cracks, bursting, bulging, or other defects. The delay lines shall also meet the requirements of 3.1, 3.20, and 3.21.

3.6 Solderability (see 4.7.4). The delay lines shall meet the applicable criteria for terminal evaluation in the test method.

3.7 Resistance to solvents (see 4.7.5). There shall be no evidence of mechanical damage and all markings shall remain legible. The paint or exterior finish shall not soften, peel, or show other signs of deterioration.

3.8 Resistance to soldering heat (see 4.7.6). There shall be no softening of the insulation or loosening of the windings or terminals, no evidence of internal solder reflow or heat damage, and delay times shall meet the requirements of 3.1.

3.9 Terminal strength (see 4.7.7). Terminals shall display no evidence of loosening, rupturing, or other mechanical damage. Bends shall not be considered as damage, unless surface cracking is evident.

3.10 Seal (see 4.7.8). There shall be no evidence of continuous air bubble flow or compound leakage.

3.11 Electrical characteristics (see 4.7.9). Delay lines shall be capable of meeting all the electrical requirements (3.11.1 through 3.11.4) specified (see 3.1).

3.11.1 Delay time (see 4.7.9.1.1). Unless otherwise specified, the overall delay times shall be as specified in the specification sheets (see 3.1).

3.11.2 Rise time (see 4.7.9.1.2). The rise time of pulses taken at the delay output shall be as specified in the specification sheets (see 3.1).

3.11.3 Delay time at temperature extremes (see 4.7.9.1.3). The delay time at the maximum and minimum operating temperatures shall be as specified in the specification sheets (see 3.1).

3.11.4 DC characteristics (see 4.7.9.1.4). The dc characteristics shall be as specified in the specification sheets (see 3.1).

3.12 Salt spray (corrosion) (when specified, see 3.1 and 4.7.10). There shall be no evidence of corrosion as exhibited by any visible degradation of the surfaces that can be attributed to flaking, pitting, blistering, or otherwise loosened protective coating or metal surface.

3.13 Vibration (see 4.7.11). There shall be no leakage of filling material and no evidence of other physical damage such as cracks, bursting, or bulging of the case. There shall be no evidence of mechanical damage and there shall be no electrical discontinuity during the test.

3.14 Shock (see 4.7.12). There shall be no leakage of filling material and no evidence of other physical damage such as cracks, bursting, or bulging of the case. There shall be no evidence of mechanical damage and there shall be no electrical discontinuity during the test.

3.15 Flammability (level A only) (see 4.7.13). There shall be no evidence of violent burning which results in an explosive-type fire, and the coating material used shall be self-extinguishing. A delay line shall not be considered to have failed in the event that it is consumed by the applied flame. A delay line shall be considered to have failed only if an explosion or dripping of flaming material occurs, an explosive-type flame is produced, or if visible burning continues beyond the allowable duration of 3 minutes after removal of the applied flame.

3.16 Thermal shock (see 4.7.14). Not more than 10 percent of the surface shall have peeling, flaking, chipping, cracking, or other impairment of the protective finish; no evidence of other physical damage such as cracks, bursting, or bulging of the case; or other defects that would affect the mechanical or electrical operation. The delay times shall meet the values specified in the specification sheets (see 3.1).

3.17 Moisture resistance (see 4.7.15). There shall be no evidence of other physical damage that could affect the mechanical or electrical operation of the delay line. The delay times shall meet the requirements of the specification sheets (see 3.1).

3.18 Life (see 4.7.16). There shall be no evidence of impairment to the protective finish or of other physical damage such as cracks, bursting, or bulging of the case. The delay times shall meet the requirements of the specification sheets (see 3.1).

3.19 Fungus (level A only) (see 4.7.17). The manufacturer shall certify that all external materials are nonnutrient to fungus growth or are suitably treated to retard fungus growth, or shall perform the test specified in 4.7.17. When tested, there shall be no evidence of fungus growth on the external surface.

3.20 Recycled, recovered, or environmentally preferable materials. Recycled, recovered, or environmentally preferable materials should be used to the maximum extent possible provided that the material meets or exceeds the operational and maintenance requirements, and promotes economically advantageous life cycle costs.

3.21 Marking.

3.21.1 JAN and J marking. The United States Government has adopted, and is exercising legitimate control over the certification marks "JAN" and "J", respectively, to indicate that items so marked or identified are manufactured to, and meet all the requirements of performance specifications. Accordingly, items acquired to, and meeting all the criteria specified herein and in applicable detail specifications shall bear the certification mark "JAN" except that items too small to bear the certification mark "JAN" shall bear the letter "J". The "JAN" or "J" shall be placed immediately before the PIN except that if such location would place a hardship on the manufacturer in connection with such marking, the "JAN" or "J" may be located on the first line above or below the PIN. Items furnished under contracts or orders which either permit or require deviation from the conditions or requirements specified herein or in applicable detail specifications shall not bear "JAN" or "J". In the event an item fails to meet the requirements of this specification and the applicable specification sheets or associated specifications, the manufacturer shall remove the "JAN" or the "J" from the sample tested and also from all items represented by the sample. The "JAN" or "J" certification mark shall not be used on products acquired to contractor drawings or specifications. The United States Government has obtained Certificate of Registration No. 504,860 for the certification mark "JAN" and Registration No. 1,586,261 for the certification mark “J”.

3.21.2 Part marking. Delays line shall be marked on the top in accordance with method I of MIL-STD-1285 (except c) with the following, as a minimum:

a. JAN marking (see 3.21.1).

b. PIN (see 1.2.1).

c. ESD identifier/index mark. The mark shall be in accordance with 3.3.2.1 herein. The MIL-STD-1285 ESD mark shall not be used.

d. Manufacturer's source code or logo.

e. Date of manufacture code.

3.22 Workmanship. Delay lines shall be manufactured and processed in such a manner as to be uniform in quality and shall be free from any defects that will affect life, serviceability, and appearance. Parts shall be free of flash pits, voids, and excessive mold marks. A visible parting line is acceptable.

4. VERIFICATION

4.1 Classification of inspections. The inspection requirements specified herein are classified as follows:

a. Qualification inspection (see 4.4).

b. Verification of qualification (see 4.5).

c. In-process, conformance, and periodic inspections (see 4.6).

4.2 QPL System. The manufacturer shall establish and maintain a QPL system as described in 3.3. Evidence of such compliance shall be verified by the qualifying activity of this specification as a prerequisite for qualification and retention of qualification.

4.3 Inspection conditions. Unless otherwise specified, all inspections shall be performed in accordance with the test conditions specified in the "GENERAL REQUIREMENTS" of the applicable DoD standard, such as MIL-STD-202, MIL-STD-810, or MIL-STD-883.

4.3.1 Reference test circuit, test equipment and measurements. Reference test circuit, test equipment, and measurements shall be as specified in 4.3.1.1 through 4.3.1.3.

4.3.1.1 Reference test circuit. The reference test circuit shall be as shown in figure 1. The delay line shall be terminated internally. The test circuit capacitances including probe shall be 10 pF maximum. Waveform characteristics are shown in figure 2. Any circuit possessing the same accuracy as the reference test circuit may be used. However, in case of conflict, the reference test circuit will take precedence.

4.3.1.2 Test equipment. The test equipment and fixturing used shall be capable of accurately measuring all performance parameters specified.

a. Test fixture: A fixture with a massive ground plane shall be used. All leads shall be .25 inch (6.35 mm) maximum. Stray capacitance and inductance shall be less than 10 pF and 10 nH respectively. Resistors shall be noninductive types. Coaxial cable shall be used, RG-58C/U or equivalent, 15 inches (381.00 mm) length maximum.

b. Probe: The oscilloscope's recommended probe should be used. The probe capacitance and circuit capacitance shall be 10 pF maximum at the probe tip.

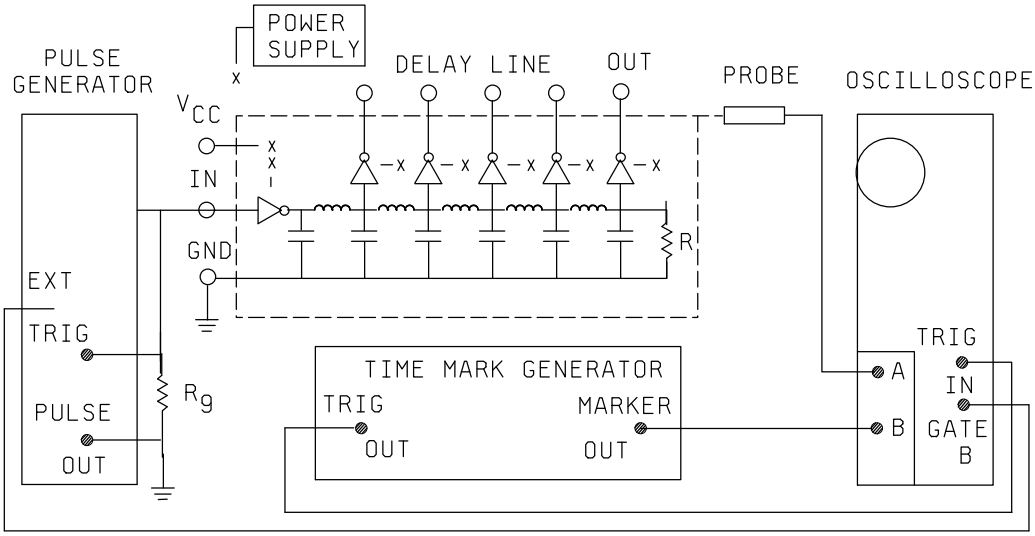

NOTES:

1. All measurements refer to definitions of ECA/EIA-242.
2. Rg = generator terminating impedance.

FIGURE 1. Reference test circuit.

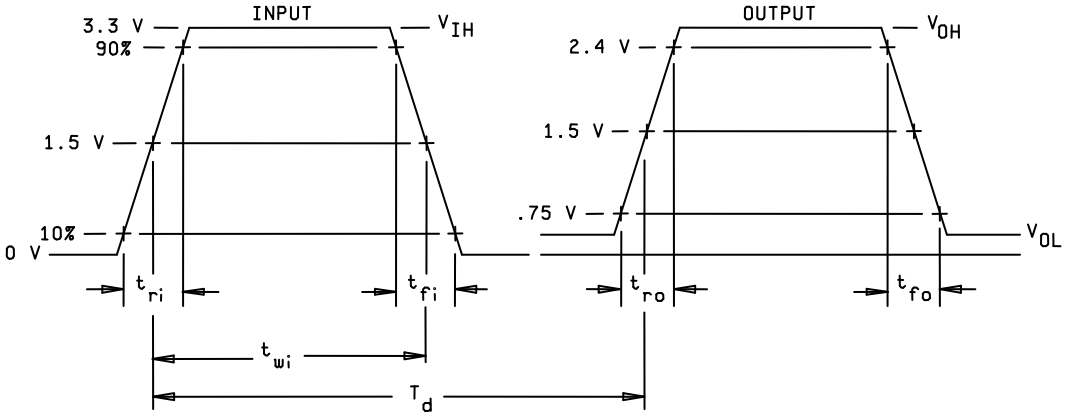

FIGURE 2. Waveform characteristics.

4.3.1.3 Input characteristics.

a. Input rise time/fall time: $\leq$ 3 ns (test points 10 to 90 percent).

b. Input pulse amplitude: 3.3 V ± 0.5 V.

c. Input pulse width: Input pulse width shall be as specified (see 3.1).

d. Supply voltage: 5.00 ± .01 V dc.

4.3.2 Test equipment and inspection facilities. Test and measuring equipment and inspection facilities of sufficient accuracy, quality and quantity to permit performance of the required inspection shall be established and maintained by the manufacturer. The establishment and maintenance of a calibration system to control the accuracy of the measuring and test equipment shall be in accordance with ISO-IEC 17025, ISO 10012, or equivalent system as approved by the qualifying activity.

4.3.3 Tolerances. Unless otherwise specified (see 3.1), all mechanical, electrical, and environmental parameters shall have a tolerance of ±10 percent.

4.4 Qualification inspection. Qualification inspection shall be performed at a laboratory acceptable to the Government (see 6.3) on sample units produced with equipment and procedures normally used in production.

Qualification of the “C” military level PIN is predicated upon qualification of the “A or B” product level PINs. Upon request of the manufacturer, qualification to the “C” military level PINs will be granted for the envelope of products successfully qualified to the “A or B” product level PINs. The products involved must be of the same design, manufactured using the same facilities, processes, and materials as the product originally submitted for and qualified under the “A or B” product levels.

4.4.1 Sample. The number of sample units comprising a sample of delay lines to be submitted for qualification inspection shall be as specified in table I.

4.4.2 Inspection routine. Qualification samples shall be subjected to the tests as specified in table I, in the order shown, as applicable for each delay line. All sample units shall be subjected to the tests of Q1. The sample units shall then be divided into three groups (Q2, Q3, and Q4). The tests within each group shall be performed in the order shown.

4.4.3 Failures. Failures in excess of those allowed in table I shall be cause for refusal to grant qualification.

TABLE I. Qualification inspection (level A). 1/

Inspection	Requirement paragraph	Method paragraph	Number of sample units		Number of failures	
			Class		Class	
			A	B	A	B
Q1						
Dimensions	3.5.1	4.7.2				
Thermal shock (50 cycles)	3.16	4.7.14	22	22	2	2
Seal	3.10	4.7.8				
Electrical characteristics	3.11	4.7.9				
Visual inspection	3.5.2	4.7.3				
Q2						
Resistance to solvents	3.7	4.7.5				
Solderability	3.6	4.7.4				
Moisture resistance	3.17	4.7.15	10	10	0	0
Salt spray (metal case)	3.12	4.7.10				
Shock	3.14	4.7.12				
Vibration	3.13	4.7.11				
Electrical characteristics	3.11	4.7.9				
Visual inspection	3.5.2	4.7.3				
Q3						
Life	3.18	4.7.16				
Terminal strength	3.9	4.7.7	6	6	0	0
Fungus 2/	3.19	4.7.17				
Electrical characteristics	3.11	4.7.9				
Visual inspection	3.5.2	4.7.3				
Q4						
Resistance to soldering heat	3.8	4.7.6	4	2	0	0
Flammability	3.15	4.7.13				

1/ The "JAN" or "J" marking and PIN are not required on qualification samples.
2/ Test need not be performed if the manufacturer provides certification that all external materials are nonnutrient to fungus growth or suitably treated to retard fungus growth.

4.4.4 Extent of qualification. Extent of qualification shall normally be applicable only for delay lines on the same specification sheet. However, where delay lines of a given minimum section requirement on one specification sheet are qualified, delay lines of a lesser minimum section requirement on another sheet shall, on the basis of greater design simplicity, be qualified, provided they are essentially equivalent in form, fit, and function to those on the first sheet. As a requisite of extension of qualification, the product involved must be manufactured using the same facilities, processes, and materials as the product originally submitted for qualification. Qualification of the lowest total delay time and highest total delay time for a given specification sheet will extend qualification for all intermediate total delay values. Qualification shall not be extended from one product assurance level to another, nor from one case material (plastic or metal) to the other. Qualification of one case outline (see appendix) extends to the remaining outlines of the same material.

4.5 Verification of qualification. (level B and S see 3.3) Every 12 months the manufacturer shall provide verification of qualification to the qualifying activity. Continuation of qualification is based on meeting the following requirements:

a. MIL-STD-790 program.

b. Design of the delay lines has not been modified.

c. Lot rejection does not exceed 10 percent of the lots submitted to group A, or one lot, whichever is greater.

d. Periodic group B and requalification inspections.

e. Continued qualification to military level C (see 4.4).

In the event that no production occurred during the 12-month reporting period, the manufacturer shall certify to the qualifying activity that the company still has the capabilities and facilities necessary to produce the item. If during two consecutive reporting periods there has been no production, the manufacturer may be required, at the discretion of the qualifying activity, to submit the products (a representative product of each delay line) to testing in accordance with the qualification inspection requirements.

In addition to the above, the manufacturer shall requalify every 36 months.

4.6 In-process, conformance, and periodic inspections.

4.6.1 Inspection of product for delivery.

a. Product level A shall consist of group A inspection.

b. Product level B and S shall be in accordance with MIL-PRF-38534 and electrical characteristics shall be as specified (see 3.1).

c. Product level C (see 4.6.1.2.1).

4.6.1.1 Inspection lot.

4.6.1.1.1 Level A delay line. An inspection lot shall consist of all delay lines of a single PIN, produced under essentially the same conditions, and offered for inspection at one time.

4.6.1.2 Group A inspection. Group A inspection for level A shall consist of the inspections specified in table II in the order shown.

4.6.1.2.1 Military level C. The manufacturer shall establish and maintain an inspection system to verify that the delay lines meet the electrical, visual, mechanical, and solderability requirements. In-line or process control may be part of such a system. The inspection system shall also include criteria for lot rejection and corrective actions. The inspection system shall be verified under the overall QPL system (see 3.3). NOTE: Since the C level is the same design as the A or B level without the mandatory conformance inspection, this product is still expected to meet the environmental qualification type requirements (moisture resistance, shock, or vibration).

4.6.1.2.2 Level A.

4.6.1.2.2.1 Sampling plan. Each delay line offered for inspection shall be subjected to the tests in A1. Lots having more than 5 percent total rejects shall not be furnished on the contracts. Delay lines out of specification limits shall not be shipped with the lot. For A2, a sample of parts shall be randomly selected in accordance with table III.

If one or more defects are found, the lot shall be rescreened and the defective parts removed. After screening and removal of defective parts, a new sample of parts shall be randomly selected in accordance with table III. If one or more defects are found in the second sample, the lot shall be rejected and shall not be supplied to this specification.

TABLE II. Group A inspection.

Inspection	Requirement paragraph	Test method paragraph	Sampling plan
A1			
Thermal shock (15 cycles)	3.16	4.7.14	100 percent inspection
Seal (metal cases only)	3.10	4.7.8	
Delay time (at ambient)	3.11.1	4.7.9.1.1	
Rise time (at ambient)	3.11.2	4.7.9.1.2	
DC characteristics (at ambient)	3.11.4	4.7.9.1.4	
A2			
Delay time at temperature extremes	3.11.3	4.7.9.1.3	See table III
Rise time at temperature extremes	3.11.2	4.7.9.1.2	
DC characteristics at temperature extremes 1/	3.11.4	4.7.9.1.4	
Dimensions	3.5.1	4.7.2	
Visual inspection	3.5.2	4.7.3	

1/ This test can be eliminated if the manufacturer has demonstrated process control under the SPC program (see 3.3.1), or other method approved by the qualifying activity. If the design, material, technology, or processing of the part is changed, or if there are any quality problems, or failures, the qualifying activity may require resumption of the specified testing. Deletion of testing does not relieve the manufacturer from meeting the test requirement in case of dispute.

TABLE III. Group A2, inspection sampling plan.

Lot size	Sample size
1 to 13	All
14 to 150	13
151 to 280	20
281 to 500	29
501 to 1,200	34
1,201 to 3,200	42
3,201 to 10,000	50
10,001 to 35,000	60

4.6.1.2.3 Disposition of sample units. Sample units which have passed group A inspection shall be delivered on the contract or purchase order if the lot is accepted.

4.6.2 Periodic tests. Periodic tests shall consist of group B inspection and the requalification inspection. Except where the results of these tests have shown noncompliance with the applicable requirements (see 4.6.2.3), delivery of products which have passed group A inspection shall not be delayed pending the results of group B or requalification inspection.

4.6.2.1 Group B inspection. Group B inspection shall consist of the inspections specified in table IV, in the order shown. Group B inspection shall be made on sample units selected from inspection lots which have passed the group A inspection. Product levels B and S shall be in accordance with MIL-PRF-38534.

TABLE IV. Group B inspection.

Inspection	Requirement paragraph	Test method paragraph
B1 (4 units)		
Resistance to solvents	3.7	4.7.5
Solderability	3.6	4.7.4
Salt spray (metal cases only)	3.12	4.7.10
Shock	3.14	4.7.12
Electrical characteristics	3.11	4.7.9
B2 (4 units)		
Life	3.18	4.7.16
Terminal strength	3.9	4.7.7
Electrical characteristics	3.11	4.7.9

4.6.2.1.1 Sampling plan. Eight (8) sample units of any total delay value of each specification sheet shall be selected 12 months after the date of notification of qualification, and after each subsequent 12 month period. If, during a 12 month period, requalification testing has been successfully completed on delay lines covered by extent of qualification (see 4.4.4), inspection may be omitted for that 12 month period.

4.6.2.1.2 Failures. If one or more sample units fail to pass group B inspection, the sample shall be considered to have failed.

4.6.2.1.3 Disposition of sample units. Sample units which have been subjected to group B inspection shall not be delivered on the contract or purchase order.

4.6.2.2 Requalification inspection. Every 36 months, the requalification inspection shall be performed at a laboratory acceptable to the government (see 6.3) on sample units produced with equipment and procedures used in production. Requalification inspection shall consist of the inspections specified in table V, in the order shown.

4.6.2.2.1 Sample. The number of sample units shall be as specified in 4.6.2.2.1.1, 4.6.2.2.2, and table V.

4.6.2.2.1.1 Single-type submission. A sample consisting of 14 units of the specific delay line for which requalification is sought.

4.6.2.2.2 Combined-type submission. To requalify all parts on an individual specification sheet, test samples shall be selected as follows:

a. Seven sample units of the lowest output delay time, for which requalification is sought, shall be tested.

b. Seven sample units of the highest output delay time for which requalification is sought, shall be tested.

4.6.2.2.3 Failures. Failures in excess of those allowed in table V shall be cause for the entire sample lot to fail.

4.6.2.2.4 Disposition of sample units. Sample units which have been subjected to requalification inspection shall not be delivered on the contract or purchase order.

4.6.2.3 Noncompliance. If a sample fails to pass the group B or requalification inspection, the manufacturer shall immediately notify the qualifying activity of the cause of such failure and take corrective action on the materials or processes, and on all units of product which can be corrected and which were manufactured under essentially the same conditions, with essentially the same materials or processes, and which were subject to the same failure. Acceptance and shipment of the product shall be discontinued until corrective action acceptable to the qualifying activity has been taken. After corrective action has been taken, the group B or requalification inspection shall be repeated on additional sample units (all inspections, or the inspection which the original sample failed, at the option of the qualifying activity). Group A inspection may be reinstituted; however, final acceptance and shipment shall be withheld until the group B or requalification inspection has shown that the corrective action was successful. In the event of a failure after reinspection, the cause of such failure shall be immediately furnished to the qualifying activity.

TABLE V. Requalification inspection.

Inspection	Requirement paragraph	Test method paragraph	Number of sample units		Number of allowable failures	
			Single submission	Combined submission	Single submission	Combined submission
R1						
Dimensions	3.5.1	4.7.2				
Thermal Shock (50 cycles)	3.16	4.7.14	14	7	2	1
Seal	3.10	4.7.8				
Electrical characteristics	3.11	4.7.9				
Visual inspection	3.5.2	4.7.3				
R2						
Resistance to solvents 1/	3.7	4.7.5				
Solderability	3.6	4.7.4				
Moisture resistance	3.17	4.7.15				
Salt spray (corrosion) (metal cases only)	3.12	4.7.10	4	2	0	0
Vibration	3.13	4.7.11				
Shock	3.14	4.7.12				
Electrical characteristics	3.11	4.7.9				
Visual inspection	3.5.2	4.7.3				
R3						
Life	3.18	4.7.16				
Terminal strength	3.9	4.7.7	4	2	0	0
Fungus 2/	3.19	4.7.17				
Electrical characteristics	3.11	4.7.9				
Visual inspection	3.5.2	4.7.3				
R4						
Resistance to soldering heat	3.8	4.7.6	4	2	0	0
Flammability	3.15	4.7.13				

1/ Units from R4 may be used to fulfill the minimum sample size required for the resistance to solvents test only when using the combined-type submission.
2/ The fungus test need not be performed if the manufacturer provides certification that all external materials are nonnutrient to fungus growth or suitably treated to retard fungus growth.

4.7 Methods of inspection. Product levels B and S shall be in accordance with MIL-PRF-38534.

4.7.1 Materials. The manufacturers shall certify in writing that the materials used meet all the requirements of 3.4.

4.7.2 Dimensions. All dimensions shall be measured with a suitable instrument, (see 4.3.2) to the requirements of 3.5.1.

4.7.3 Visual inspection. Level A delay lines shall be visually inspected with normal or corrected 20/20 vision to meet the requirements of 3.5.2.

4.7.4 Solderability (see 3.6). Level A delay lines shall be tested in accordance with method 208 of MIL-STD-202. The following details shall apply:

a. Special preparation of specimen: Sample units shall not have been soldered during any of the previous tests. Electrical rejects from the tested lot may be used.

b. All terminals of each part shall be tested.

4.7.5 Resistance to solvents (see 3.7). Level A delay lines shall be tested in accordance with method 215 of MIL-STD-202.

4.7.6 Resistance to soldering heat (see 3.8). Level A delay lines shall be tested in accordance with method 210 of MIL-STD-202. The following details shall apply:

a. Special preparation of specimen: None.

b. Mounting board shall not be metal clad.

c. Test condition: C.

d. Cooling time: Five minutes.

e. Examinations after test: Electrical characteristics and X-rays in two perpendicular planes (the two largest surface areas).

4.7.7 Terminal strength (see 3.9). Level A delay lines shall be tested as specified in accordance with MIL-STD-202, method 211, test condition A, applied force 5 pounds. One terminal on each test sample shall be subjected to the test. Level B delay lines shall be tested in accordance with method 2004, condition B-2, of MIL-STD-883.

4.7.8 Seal (see 3.10).

4.7.8.1 Level A. Delay lines shall be immersed for a minimum of 2 minutes in a bath of water, or any other suitable liquid of no greater density and surface tension, maintained at a temperature of at least +85°C. The temperature of the delay line shall not exceed +40°C at the time of immersion.

4.7.9 Electrical characteristics (see 3.11).

4.7.9.1 Pulse methods. Any pulse method may be used; however, the reference method (see 4.3.1) shall be used in case of conflict.

4.7.9.1.1 Delay time. The time delay of pulses taken at each tap and the output of delay lines shall be measured to determine conformance with 3.11.1.

4.7.9.1.2 Rise time. The rise time of pulses taken at the output shall be measured to determine conformance with 3.11.2.

4.7.9.1.3 Delay time at temperature extremes (see 3.11.3). The output of the delay line shall be measured at the maximum and minimum operating temperatures. Power shall be applied after temperature stabilizes.

4.7.9.1.4 DC characteristics (see 3.11.4). DC characteristics shall be checked with suitable measuring equipment. The parameters shall fall within the limitations on individual specification sheets.

4.7.10 Salt spray (corrosion) (see 3.12). When specified, level A delay lines shall be tested in accordance with method 101 of MIL-STD-202, test condition A.

4.7.11 Vibration (see 3.13). Level A delay lines shall be tested in accordance with method 214 of MIL-STD-202.

a. Method of mounting: Delay lines shall be mounted by soldering to a printed wiring board.

b. One test point.

c. Test condition I letter K: Fifteen minutes.

d. Measurements before and after: Delay time.

e. There shall be no electrical discontinuity during the test.

4.7.12 Shock (see 3.14). Level A delay lines shall be tested in accordance with method 213 of MIL-STD-202, test condition I.

4.7.13 Flammability (see 3.15). Level A delay lines shall be tested in accordance with method 111 of MIL-STD-202. The following details and exception shall apply:

a. Point of flame application: The flame shall be applied to the body.

b. Allowable time for burning of visible flame on specimen: Three minutes maximum.

c. Inspection during and after test: Delay lines shall be inspected for evidence of violent burning which results in an explosive-type fire, dripping of flaming material, and visible burning which continues beyond the allowable duration after removal of the applied flame. Level B delay lines do not require this test.

4.7.14 Thermal shock (see 3.16). Level A delay lines shall be tested in accordance with method 107 of MIL-STD-202. The following details shall apply:

a. Test condition B-2 (50 cycles) for qualification and group B (except low temperature shall be -55°C).

b. Test condition B (except 15 cycles) for group A (except low temperature shall be -55°C).

c. Measurements before and after test: Delay time.

4.7.15 Moisture resistance (see 3.17). Level A delay lines, unless otherwise specified (see 3.1), shall be tested in accordance with method 106 of MIL-STD-202, except step 7b, which is not applicable. Load voltage not applicable; measurements taken before and after delay times.

4.7.16 Life (see 3.18). Level A delay lines shall be tested in accordance with method 108 of MIL-STD-202. The following details shall apply:

a. Distance of temperature measurements from specimens: Three inches (7.62 mm) in still air.

b. Test temperature and tolerance: +125°C ± 3°C (+257°F ± 5°F).

c. Operating conditions: 3.0 volts, square wave, 50 percent duty cycle, V_{CC} = 5.5 ± 0.1 volts, frequency 100 kHz, taps unloaded. Fixturing shall guarantee that supply voltage is maintained throughout life test.

d. Test condition: D.

e. Measurements: Delay time and DC characteristics.

4.7.17 Fungus (level A only; see 3.19). If materials are not certified as being nonnutrient to fungus growth, or are not treated to retard fungus growth, they shall be tested in accordance with method 508 of MIL-STD-810.

5. PACKAGING

5.1 Packaging. For acquisition purposes, the packaging requirements shall be as specified in the contract or order (see 6.2). When packaging of materiel is to be performed by DoD or in-house contractor personnel, these personnel need to contact the responsible packaging activity to ascertain packaging requirements. Packaging requirements are maintained by the Inventory Control Point's packaging activities within the Military Service or Defense Agency, or within the military service's system commands. Packaging data retrieval is available from the managing Military Department's or Defense Agency's automated packaging files, CD-ROM products, or by contacting the responsible packaging activity.

6. NOTES

(This section contains information of a general or explanatory nature that may be helpful, but is not mandatory.)

6.1 Intended use. Delay lines conforming to this specification are intended for use in communication, radar, and other electronic systems. Their principle areas of application are for aircraft, missiles, spacecraft, shipboard, and ground-support equipment. Delay lines covered by this specification must be able to operate in systems under the following demanding conditions: an operating temperature range of -55°C to +125°C, 46 g's of vibration, 100 g's of shock, and have reduced susceptibility to corrosion in salt water environments. These requirements are verified under a qualification system.

6.2 Acquisition requirements. Acquisition documents should specify the following:

a. Title, number, and date of the specification.

b. Packaging requirements (see 5.1).

6.3 Qualification. With respect to products requiring qualification, awards will be made only for products which are, at the time of award of contract, qualified for inclusion in Qualified Products List QPL No. 83532 whether or not such products have actually been so listed by that date. The attention of the contractors is called to these requirements, and manufacturers are urged to arrange to have the products that they propose to offer to the Federal Government tested for qualification in order that they may be eligible to be awarded contracts or orders for the products covered by this specification. Information pertaining to qualification of products may be obtained from (Passive Devices Team, P.O. Box 3990, Columbus, OH 43218-3990, vqp.arw@dla.mil or vqp.kr@dla.mil). An online listing of products qualified to this specification may be found in the Qualified Products Database (QPD) at https://assist.dla.mil.

6.3.1 Provisions governing qualifications. Copies of SD-6, "Provisions Governing Qualification", may be obtained upon application to Defense Automated Printing Service, Building 4D (DPM-DoDSSP), 700 Robbins Avenue, Philadelphia, PA 19111-5094. http://quicksearch.dla.mil.

6.4 PIN. This specification requires a PIN that describes codification or classification and appropriate references to associated documents (see 1.2.1 and 3.1).

6.5 Subject term (key word) listing.

Buffered pulse delay
Delay time
Duty cycle
Fanout
Hybrid microcircuit
Number of sections
Pulse width
Rise/Fall time
Taps

6.6 Tin whisker growth. Use of tin plating is prohibited (see 3.4.7). The use of alloys with tin content greater than 97 percent, by mass, may exhibit tin whisker growth problems after manufacture. Tin whiskers may occur anytime from a day to years after manufacture and can develop under typical operating conditions, on products that use such materials. Conformal coating applied over top of a whisker-prone surface will not prevent the formation of tin whiskers. Alloys of 3 percent lead, by mass, have shown to inhibit the growth of tin whiskers. For additional information on this matter, refer to ASTM-B545 (Standard Specification for Electrodeposited Coatings of Tin).

6.7 Environmentally preferable material. Environmentally preferable materials should be used to the maximum extent possible to meet the requirements of this specification. As of the dating of this document, the U.S. Environmentally Protection Agency (EPA) is focusing efforts on reducing 31 priority chemicals. The list of chemicals is available on their website at http://www.epa.gov/epaoswer/hazwaste/minimize/chemlist.htm. Further information is available at the following EPA site: http://www.epa.gov/epaoswer/hazwaste/minimize/. Included in the EPA list of 31 priority chemicals are cadmium, lead, and mercury. Use of the materials on the list should be minimized or eliminated unless needed to meet the requirements specified herein (see section 3).

6.8 Changes from previous issue. The margins of this specification are marked with vertical lines to indicate where changes from the previous issue were made. This was done as a convenience only and the Government assumes no liability whatsoever for any inaccuracies in these notations. Bidders and contractors are cautioned to evaluate the requirements of this document based on the entire content irrespective of the marginal notations and relationship to the last previous issue.

APPENDIX A

CASE OUTLINES

A. SCOPE

A.1 Scope. This appendix describes case outlines that are specified in specification sheets. For outlines not identified in this appendix, refer to the associated specification sheets for requirements (see 3.1). This appendix is a mandatory part of the specification. The information contained herein is intended for compliance.

A.2 APPLICABLE DOCUMENTS (This section is not applicable to this appendix).

A.3 REQUIREMENTS

A.3.1 See figure A-1.

APPENDIX A

Case outline A

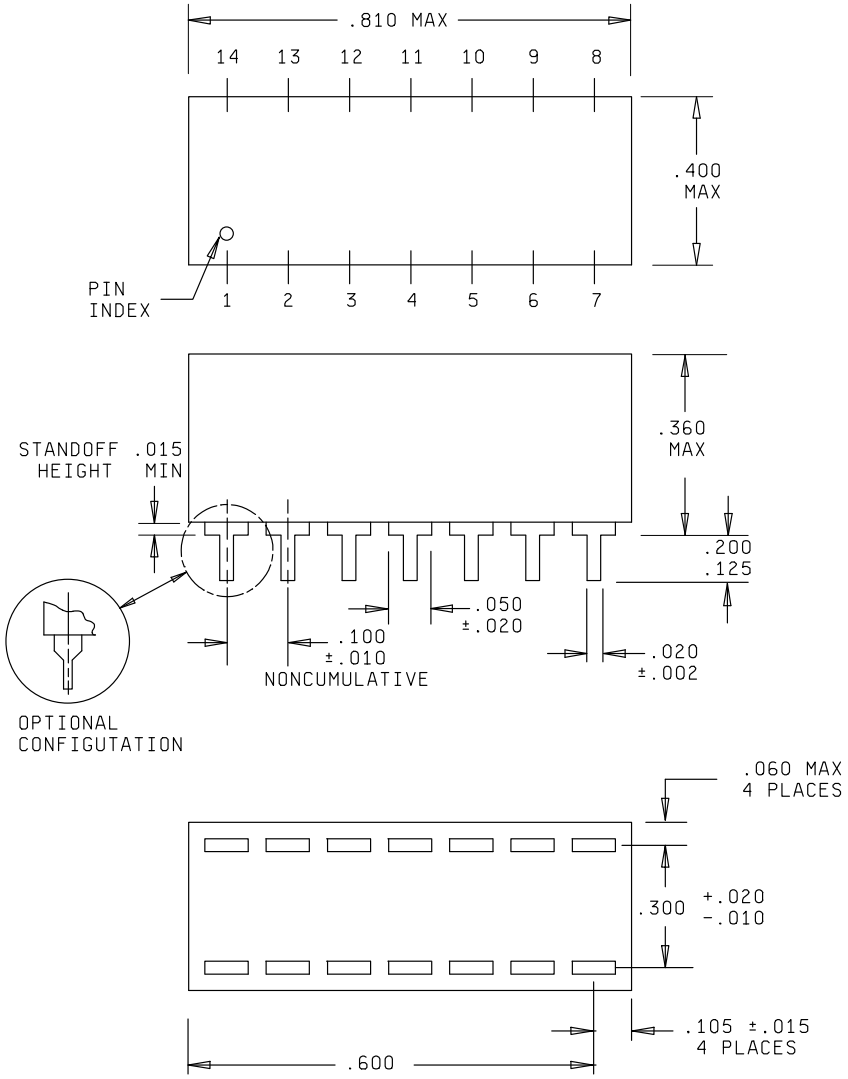

Inches	mm
.002	0.05
.010	0.25
.015	0.38
.020	0.51
.050	1.27
.060	1.52
.100	2.54
.105	2.67
.125	3.18
.200	5.08
.300	7.62
.360	9.14
.400	10.16
.600	15.24
.810	20.57

FIGURE A-1. Case outlines.

APPENDIX A

Case outline B

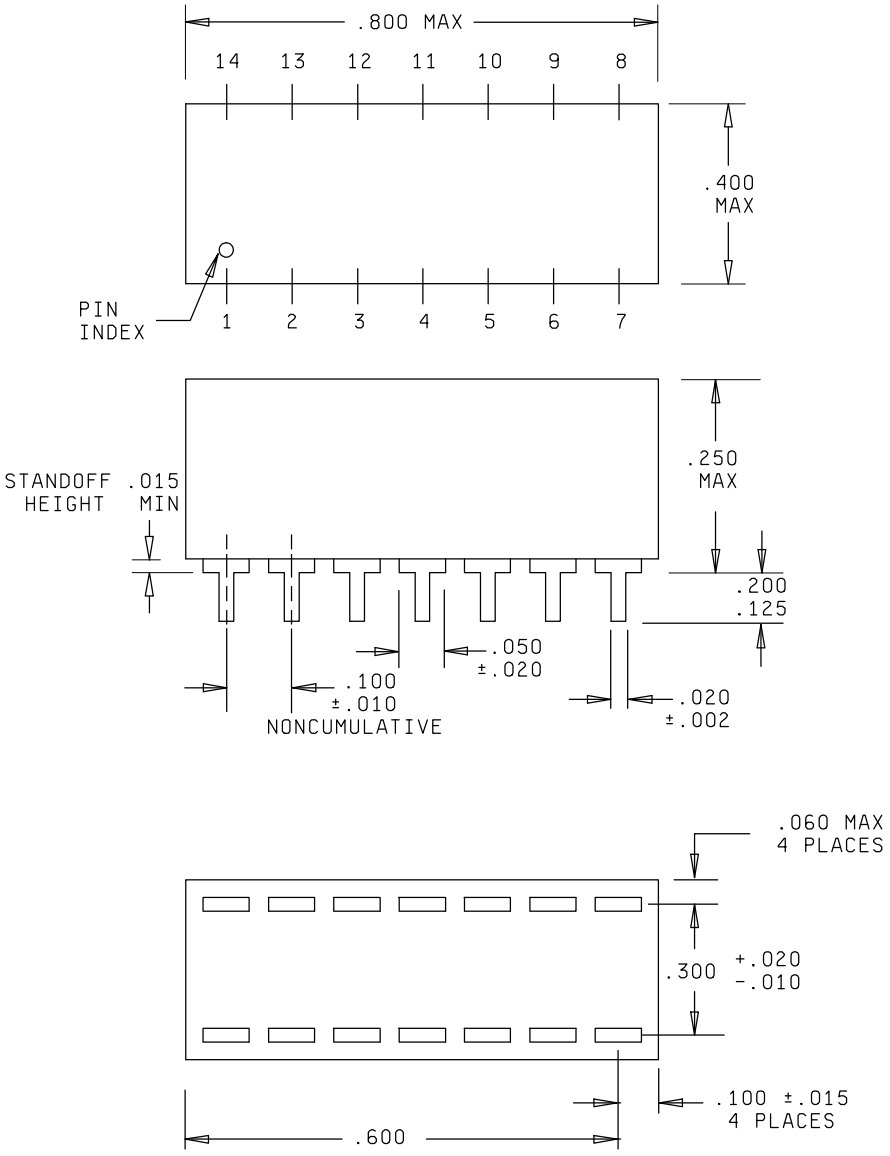

Inches	mm
.002	0.05
.010	0.25
.015	0.38
.020	0.51
.050	1.27
.060	1.52
.100	2.54
.125	3.18
.200	5.08
.250	6.35
.300	7.62
.400	10.16
.600	15.24
.800	20.32

FIGURE A-1. Case outlines - Continued.

APPENDIX A

Case Outline C

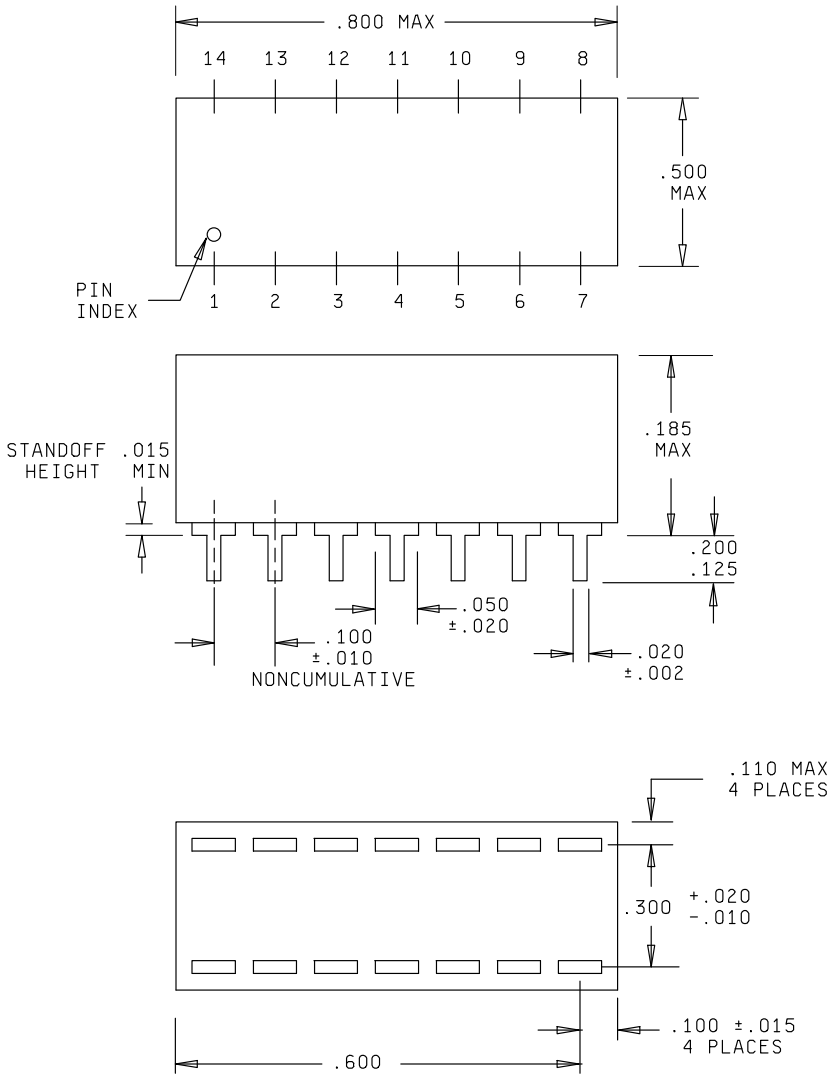

Inches	mm
.002	0.05
.010	0.25
.015	0.38
.020	0.51
.050	1.27
.100	2.54
.110	2.79
.125	3.18
.185	4.70
.200	5.08
.300	7.62
.500	12.7
.600	15.24
.800	20.32

FIGURE A-1. Case outlines - Continued.

APPENDIX A

Case Outline D

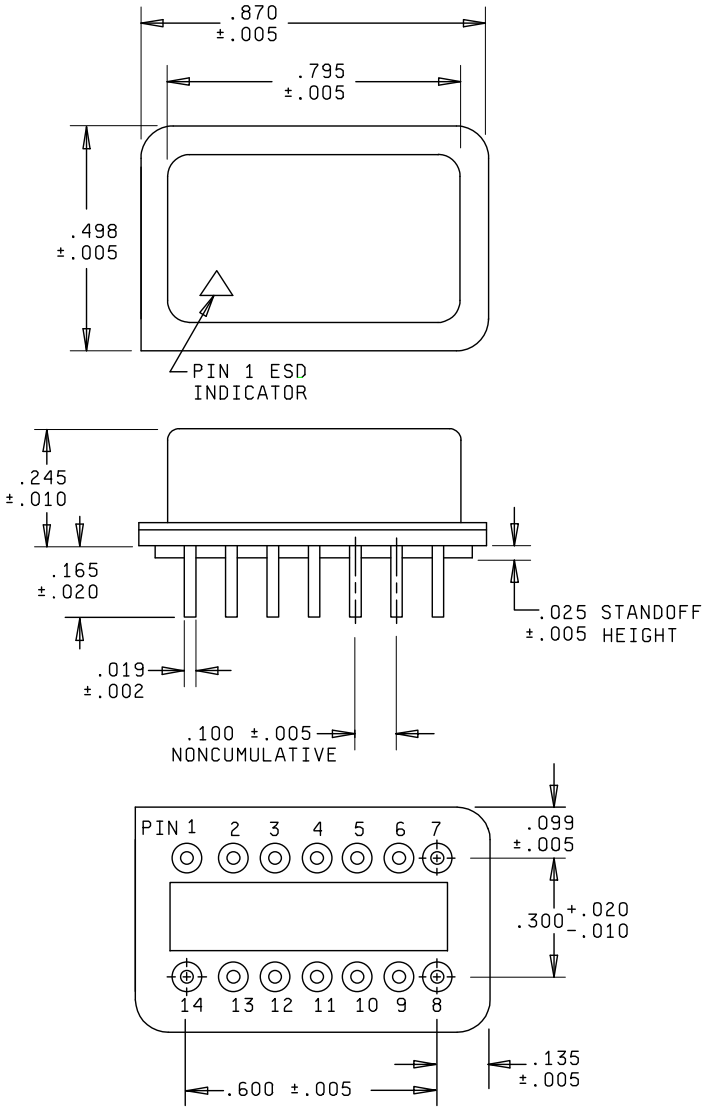

Inches	mm
.002	0.05
.005	0.13
.010	0.25
.019	0.48
.020	0.51
.025	0.64
.099	2.52
.100	2.54
.135	3.43
.165	4.19
.245	6.22
.300	7.62
.498	12.65
.600	15.24
.795	20.19
.870	22.10

FIGURE A-1. Case outlines - Continued.

APPENDIX A

Case Outline E

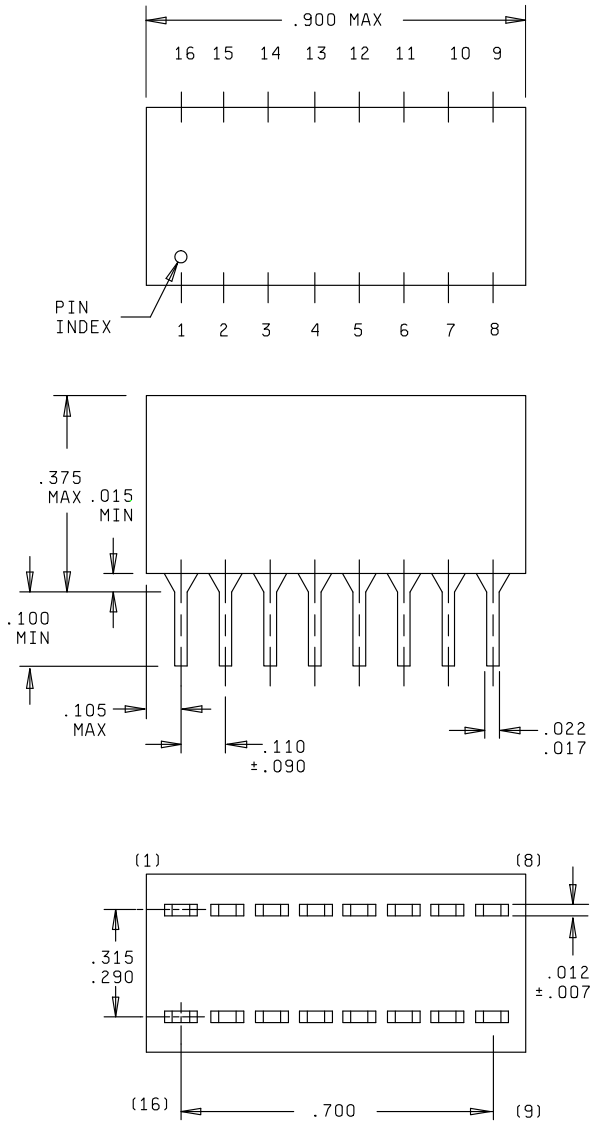

Inches	mm
.007	0.18
.012	0.30
.015	0.38
.017	0.43
.022	0.56
.090	2.29
.105	2.67
.110	2.79
.115	2.92
.290	7.37
.315	8.00
.375	9.53
.400	10.16
.700	17.78
.900	22.86

FIGURE A-1. Case outlines - Continued.

APPENDIX A

Case Outline F

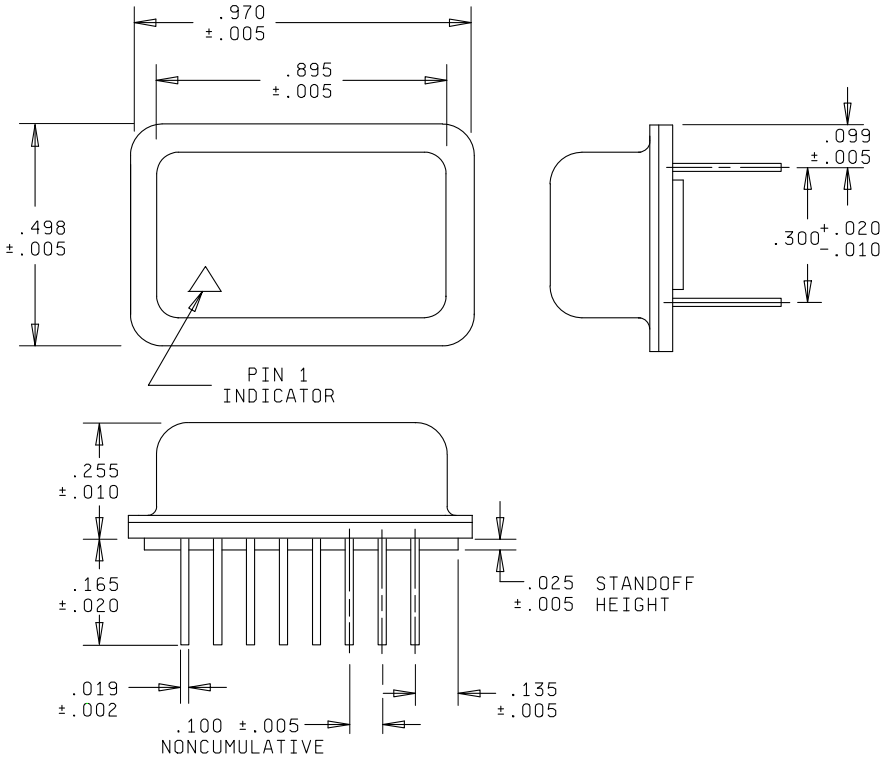

Inches	mm
.002	0.05
.005	0.13
.010	0.25
.019	0.48
.020	0.51
.025	0.64
.099	2.51
.100	2.54
.135	3.43
.165	4.19
.255	6.48
.300	7.62
.498	12.65
.895	22.73
.970	24.64

NOTES:
1. Dimensions are in inches.
2. Metric equivalents are given for general information only.
3. Unless otherwise specified, tolerance is ±.005 (0.13 mm).
4. Location and shape of standoffs are optional. Height shall be as indicated.
5. Case material is epoxy for case styles A, B, C, and E.
6. Case material is metal for case styles D and F.

FIGURE A-1. Case outlines - Continued.

Custodians:
Army - CR
Navy - EC
Air Force - 85
DLA - CC

Review activities:
Navy - AS, CG, MC, SH
Air Force –19, 99

Preparing activity:
DLA - CC

(Project 5999-2013-007)

NOTE: The activities listed above were interested in this document as of the date of this document. Since organizations and responsibilities can change, you should verify the currency of the information above using the ASSIST Online database at https://assist.dla.mil.