INCH-POUND

MIL-PRF-83401/14B
w/ Amendment 2
18 August 2016
SUPERSEDING
MIL-PRF-83401/14B
w/ Amendment 1
3 February 2011

PERFORMANCE SPECIFICATION SHEET

RESISTOR NETWORK, FIXED, FILM, STYLE RZ140, 16 PIN DIP

This specification is approved for use by all Departments and Agencies of the Department of Defense.

The requirements for acquiring the product described herein shall consist of this specification sheet and MIL-PRF-83401.

1. SCOPE

1.1 Scope. This specification covers the associated requirements for style RZ140, 16 pin dual-in-line package (DIP) resistor networks. This style is available in all characteristics and all resistance tolerances. This specification has two product levels, a high reliability, 100 percent burn-in screened "M" part number level and nonburn-in screened part number "C". Designers are CAUTIONED on using these resistors in high power pulses applications (see 6.4).

1.2 Part or Identifying Number (PIN). Resistor networks covered by this specification are identified by a PIN which will consist of the basic number of this specification and a coded number. The PIN is in the following form:

100 percent burn-in screened network ("M" part number)

M8340114	-	H1002FA
Associated specification number		Coded number

Nonburn-in screened network ("C" part number)

C8340114	-	H1002FA
Associated specification number		Coded number

The coded number is derived in accordance with MIL-PRF-83401.

Comments, suggestions, or questions on this document should be addressed to: DLA Land and Maritime, ATTN: VAT, Post Office Box 3990, Columbus, OH 43218-3990, or emailed to resistor@dla.mil. Since contact information can change, you may want to verify the currency of this address information using the ASSIST Online database at https://assist.dla.mil.

AMSC N/A

FSC 5905

1.2.1 Schematics. The schematics of the resistor network are identified by a single letter in accordance with the drawings below. The resistor element R_{REF} is the reference element used in determining the ratio accuracy (when applicable).

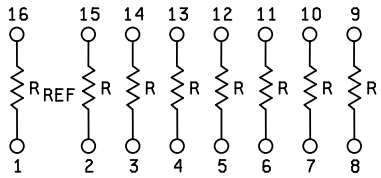

SCHEMATIC A

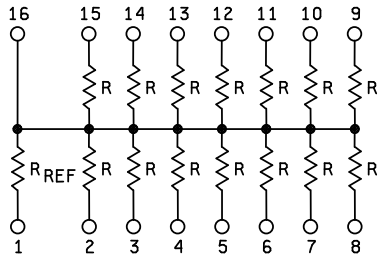

SCHEMATIC B

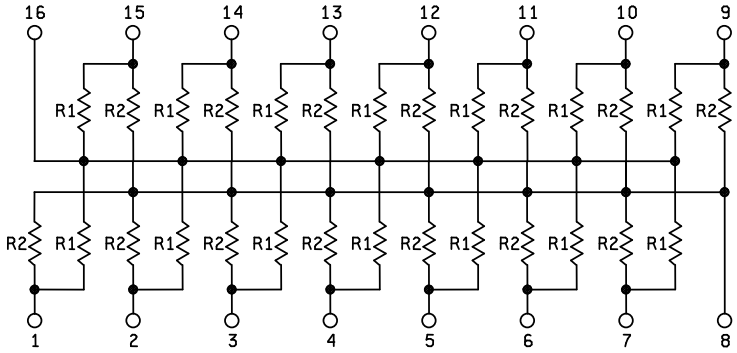

SCHEMATIC J

1.2.1.1 Standard resistance values. The standard resistance values and the resistance value designators for the J schematic are as specified in table I.

TABLE I. Standard resistance values.

Resistance designator	R_1 (ohms)	R_2 (ohms)	Resistance designator	R_1 (ohms)	R_2 (ohms)
A001	82	130	A010	330	470
A002	120	200	A011	330	680
A003	130	210	A012	1.5k	3.3k
A004	160	260	A013	3.0k	6.2k
A005	180	240	A014	180	270
A006	180	390	A015	270	270
A007	220	270	A016	560	560
A008	220	330	A017	560	1.2k
A009	330	390	A018	620	2.7k

2. APPLICABLE DOCUMENTS

2.1 General. The documents listed in this section are specified in sections 3 and 4 of this specification. This section does not include documents cited in other sections of this specification or recommended for additional information or as examples. While every effort has been made to ensure the completeness of this list, document users are cautioned that they must meet all specified requirements documents cited in sections 3 and 4 of this specification, whether or not they are listed.

2.2 Government documents.

2.2.1 Specifications, standards, and handbooks. The following specifications, standards, and handbooks form a part of this document to the extent specified herein. Unless otherwise specified, the issues of these documents are those listed in the solicitation or contract.

DEPARTMENT OF DEFENSE SPECIFICATIONS

MIL-PRF-83401 - Resistor Network, Fixed, Film, and Capacitor-Resistor Network, Ceramic Capacitor and Fixed, Film, Resistor, General Specification for.

* (Copies of these documents are available online at http://quicksearch.dla.mil/.)

* 2.3 Order of precedence. Unless otherwise noted herein or in the contract, in the event of a conflict between the text of this document and the references cited herein (except for related, specification sheets), the text of this document takes precedence. Nothing in this document, however, supersedes applicable laws and regulations unless a specific exemption has been obtained.

3. REQUIREMENTS

3.1 Associated specifications. The individual item requirements shall be in accordance with MIL-PRF-83401, as specified herein.

3.2 Interface and physical dimension. The resistor shall meet the interface and physical dimensions specified on figure 1.

3.2.1 Internal connection. Internal connections shall be accomplished by thermal compression bonding of gold to gold, a solid phase weld from the lead to the internal resistor connection. No solder connection, eutectic or noneutectic, shall be permitted in this construction.

3.3 Power rating (70°C). The power ratings for schematics A, B, and J shall be as specified in table II.

3.4 Power conditioning. The power applied for power conditioning for schematics A, B, and J shall be 1.5 times rated power.

3.5 Voltage rating. The maximum continuous working voltage for each resistor shall not exceed 100 volts dc or ac rms.

TABLE II. Power ratings.

Schematic	Characteristic	Element power rating (watts)	Network power rating (watts)
A	C	0.1	0.8
	H	0.2	1.6
	K	0.2	1.6
	M	0.2	1.6
	V	0.1	0.8
B	C	0.05	0.75
	H	0.1	1.5
	K	0.1	1.5
	M	0.1	1.5
	V	0.05	0.75
J	C	0.025	0.7
	H	0.050	1.4
	K	0.050	1.4
	M	0.050	1.4
	V	0.025	0.7

3.6 Resistance. Minimum and maximum resistance values shall be as follows:

Resistance tolerance	Minimum resistance (ohms)	Maximum resistance (megohm)
B (±0.1 percent)	100	0.1
D (±0.5 percent)	100	0.1
F (±1.0 percent)	10.0	1.0
G (±2.0 percent)	10.0	1.0
J (±5.0 percent)	10.0	1.0

4. VERIFICATION

4.1 Sampling and inspection. Sampling and inspection shall be in accordance with MIL-PRF-83401.

4.2 J schematic tests. For the tests on J schematic, the dc resistance measurements, resistance temperature characteristic measurement, and short time overload power application shall be made between each terminal and the applicable common terminal without compensation for the shunt circuits. The pin to pin dc resistance measurements shall be used directly to determine the acceptability to section 3 requirements.

5. PACKAGING

5.1 Packaging. For acquisition purposes, the packaging requirements shall be as specified in the contract or order (see 6.2). When packaging of materiel is to be performed by DoD or in-house contractor personnel, these personnel need to contact the responsible packaging activity to ascertain packaging requirements. Packaging requirements are maintained by the Inventory Control Point's packaging activities within the Military Service or Defense Agency, or within the military service's system commands. Packaging data retrieval is available from the managing Military Department's or Defense Agency's automated packaging files, CD-ROM products, or by contacting the responsible packaging activity.

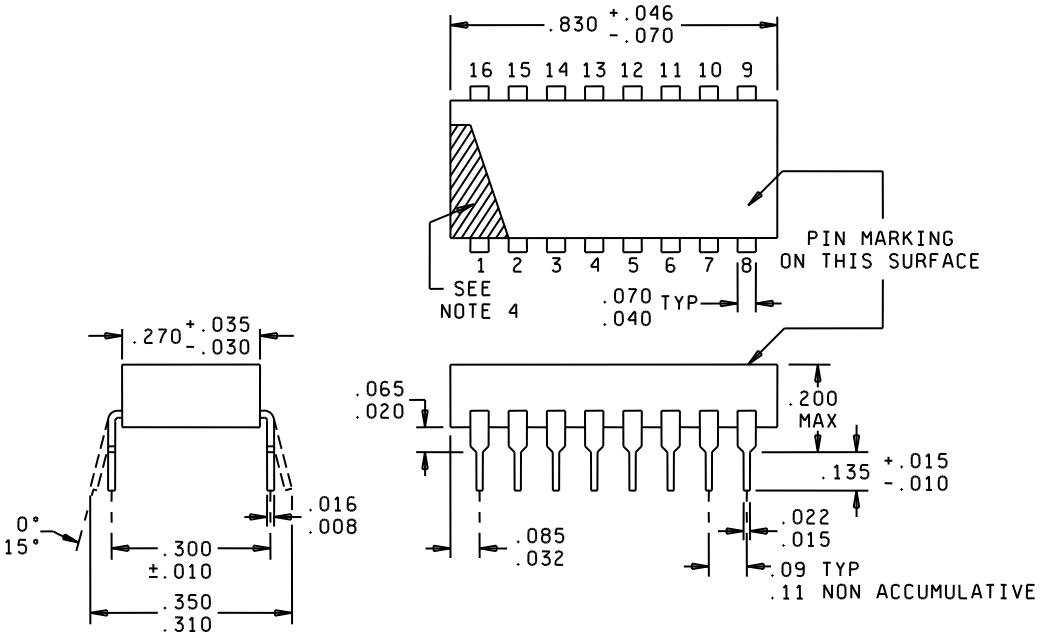

Inches	mm	Inches	mm
.008	0.20	.065	1.65
.010	0.25	.070	1.78
.015	0.38	.085	2.16
.016	0.41	.090	2.29
.020	0.51	.110	2.79
.022	0.56	.135	3.43
.030	0.76	.200	5.08
.032	0.81	.270	6.86
.035	0.89	.300	7.62
.040	1.02	.310	7.87
.045	1.14	.350	8.89
.046	1.17	.830	21.08

NOTES:
1. Dimensions are in inches.
2. Metric equivalents are given for general information only.
3. The picturization of the style above is given as representative of the envelope item. Slight deviations from the outline shown, which are contained within the envelope and do not alter the functional aspects of the device, are acceptable.
4. Pin 1 locator shall be a dot, notch, stripe, or numeral 1 adjacent to pin no. 1, in the shaded area.

FIGURE 1. Style RZ140 resistors.

6. NOTES

(This section contains information of a general or explanatory nature that may be helpful, but is not mandatory.)

6.1 Notes. The notes specified in MIL-PRF-83401 are applicable to this specification.

6.2 Acquisition requirements. Acquisition documents must specify the following:

a. Title, number, and date of this specification, and the complete PIN (see 1.2).

b. Unless otherwise specified (see 2.1), the versions of the individual documents referenced will be those in effect on the date of release of the solicitation.

c. Packaging requirements, such as electrostatic discharge (ESD) sensitivity) (see 5.1).

6.3 Electrostatic charge. Under several combinations of conditions, these resistors can be electrically damaged, by electrostatic charges, and drift from specified value. Users should consider phenomena when ordering or shipping resistors. Direct shipment to the Government is controlled by MIL-DTL-39032 which specifies a preventive packaging procedure.

6.4 Pulse applications. Designers are CAUTIONED on using these resistors in high power pulse applications. Since they have not been qualified nor tested for such applications, damage and premature failure are possible.

6.5 Amendment notations. The margins of this specification are marked with asterisks to indicate modifications generated by this amendment. This was done as a convenience only and the Government assumes no liability whatsoever for any inaccuracies in these notations. Bidders and contractors are cautioned to evaluate the requirements of this document based on the entire content irrespective of the marginal notations.

Custodians:
Army - CR
Navy - EC
Air Force - 85
DLA - CC
NASA - NA

Review activities:
Army - AR, AT, CR4, MI
Navy - AS, CG, MC, OS
Air Force - 19

Preparing activity:
DLA - CC

(Project 5905-2016-035)

NOTE: The activities listed above were interested in this document as of the date of this document. Since organizations and responsibilities can change, you should verify the currency of the information above using the ASSIST Online database at https://assist.dla.mil.