INCH-POUND
MIL-PRF-83287G
w/AMENDMENT 3
22 August 2014
SUPERSEDING
MIL-PRF-83287G
w/AMENDMENT 2
12 December 2013

PERFORMANCE SPECIFICATION

INDICATORS, FAULT LOCATING, GENERAL SPECIFICATION FOR

This specification is approved for use by all Departments
and Agencies of the Department of Defense.

1. SCOPE

1.1 Scope. This specification covers fault locating indicators, which display the operational status of electrical and electronic equipment.

1.2 Classification. Indicators covered by this specification are flag, ball, and drum indicating and mechanically or electrically resettable.

1.2.1 Part or Identifying Number (PIN). The PIN consists of the designator “M”, the basic specification and specific specification sheet numbers, and the dash number assigned to the configuration (see 3.1). Example:

M	83287	/01	-01
Military designator	General specification number	Related specification sheet	Dash number (see 3.1)

2. APPLICABLE DOCUMENTS

2.1 General. The documents listed in this section are specified in sections 3, 4, or 5 of this specification. This section does not include documents cited in other sections of this specification or recommended for additional information or as examples. While every effort has been made to ensure the completeness of this list, document users are cautioned that they must meet all specified requirements of documents cited in sections 3, 4, or 5 of this specification, whether or not they are listed.

2.2 Government documents.

2.2.1 Specifications, standards, and handbooks. The following specifications, standards, and handbooks form a part of this document to the extent specified herein. Unless otherwise specified, the issues of these documents are those cited in the solicitation or contract.

FEDERAL STANDARDS

FED-STD-H28	-	Screw-Thread Standards for Federal Services.
FED-STD-595/37038	-	Miscellaneous, Flat or Lusterless
FED-STD-595/37875	-	Miscellaneous, Flat or Lusterless

Comments, suggestions, or questions on this document should be addressed to: DLA Land and Maritime, ATTN: VAI, Post Office Box 3990, Columbus, Ohio 43218-3990 or emailed to Sound@dscc.dla.mil. Since contact information can change, you may want to verify the currency of this address information using the ASSIST Online database at https://assist.dla.mil.

AMSC N/A FSC 6625

DEPARTMENT OF DEFENSE SPECIFICATIONS

MIL-C-675	-	Coating of Glass Optical Elements (Anti-Reflection).
MIL-PRF-83287/1	-	Indicators, Fault Locating, Flag Indicating, Mechanical Reset.
MIL-PRF-83287/2	-	Indicators, Fault Locating, Flag Indicating, Electrical Reset.
MIL-PRF-83287/3	-	Indicators, Fault Locating, Ball Indicating, Electrical Reset.
MIL-PRF-83287/4	-	Indicators, Fault Locating, Dual Drum Indicating, Mechanical Reset.

DEPARTMENT OF DEFENSE STANDARDS

MIL-STD-202	-	Tests Methods for Electronic and Electrical Component Parts.
MIL-STD-704	-	Aircraft Electric Power Characteristics.
MIL-STD-1285	-	Marking of Electrical and Electronic Parts.

(Copies of these documents are available online at http://quicksearch.dla.mil or from the Document Automation and Production Service (DAPS) Standardization Document Order Desk, 700 Robbins Avenue, Building 4D, Philadelphia, PA 19111-5094.)

2.3 Non-Government publications. The following documents form a part of this document to the extent specified herein. Unless otherwise specified, the issues of these documents are those cited in the solicitation or contract.

INTERNATIONAL ORGANIZATION FOR STANDARDIZATION (ISO)

ISO-10012	-	Measurement management systems —Requirements for measurement processes and measuring equipment.

(Copies of these documents are available online at www.ansi.org or from the ANSI Customer Service Department, 25 W. 43rd Street, 4th Floor, New York, NY 10036.)

NCSL INTERNATIONAL

NCSL Z540.3	-	Requirements for the Calibration of Measuring and Test Equipment.

(Copies of these documents are available online at http://www.ncsli.org or from NCSL International, 2995 Wilderness Place, Suite 107, Boulder, Colorado 80301-5404.)

2.4 Order of precedence. Unless otherwise noted herein or in the contract, in the event of a conflict between the text of this document and the references cited herein (except for related specification sheets) the text of this document takes precedence. Nothing in this document, however, supersedes applicable laws and regulations unless a specific exemption has been obtained.

3. REQUIREMENTS

3.1 Specification sheets. The individual item requirements shall be as specified herein and in accordance with the applicable specification sheets. In the event of any conflict between the requirements of this specification and the specification sheet, the latter shall govern.

3.2 Qualification. Indicators furnished under this specification shall be products that are authorized by the qualifying activity for listing on the applicable qualified products list before contract award (see 4.3 and 6.5).

3.3 Materials. Materials shall be as specified herein. However, when a definite material is not specified, a material shall be used which will enable the indicators to meet the performance requirements of this specification. Materials shall not support combustion and shall be self-extinguishing. Materials shall not emit noxious gases in harmful quantities or gases in quantities sufficient to cause contamination or explosions in sealed enclosures. Materials shall be compatible with aircraft hydraulic fluids. Materials shall be fungus inert. Acceptance or approval of any constituent material shall not be construed as a guaranty of the acceptance of the finished product. Use of recycled, virgin and reclaimed materials is permitted.

3.3.1 Pure tin. The use of pure tin, as an under plate or final finish, is prohibited both internally and externally. Tin content of indicator components and solder shall not exceed 97 percent, by mass. Tin shall be alloyed with a minimum of 3 percent lead, by mass (see 6.3).

3.3.2 Metals. Metals shall be of the corrosion-resistant type or shall be plated or treated to resist corrosion.

3.3.2.1 Dissimilar metals. When dissimilar metals are used in intimate contact with each other, protection against electrolysis and corrosion shall be provided. The use of dissimilar metals in contact with each other, which tends toward active electrolytic corrosion (particularly brass, copper, or steel used in contact with aluminum or aluminum alloy), is not acceptable. However, metal spraying or metal plating of dissimilar base metals to provide similar or suitable abutting surfaces is permitted. Mounting hardware of dissimilar metals designed to abrade surfaces, such as toothed or stay-locking washers, shall not be permitted.

3.3.3 Recycled, recovered, environmentally preferable, or biobased materials. Recycled, recovered, environmentally preferable, or biobased materials should be used to the maximum extent possible, provided that the material meets or exceeds the operational and maintenance requirements, and promotes economically advantageous life cycle costs.

3.4 Interface and dimensions. The indicator shall be a magnetic latching type and shall be so designed that the removal of fault coil voltage shall not cause or permit loss of fault indication. Indicators shall be supplied with mounting hardware. Indicators shall be of the interface, weight, and physical dimensions specified (see 3.1).

3.4.1 Reset. Indicator reset shall be mechanical or electrical as specified (see 3.1).

3.4.1.1 Mechanical. The indicator shall be reset, by rotating the knurled ring 60 degrees clockwise with spring return. From - 40 degrees C to - 65 degrees C and at +125 degrees C, manual aid to spring return is permissible (see 3.10).

3.4.1.2 Electrical.

3.4.1.2.1 Single coil. The indicator shall be reset by applying a pulse at rated voltage and reverse polarity.

3.4.1.2.2 Dual coil. The indicator shall be reset, by applying to the reset coil a voltage of the same magnitude and polarity, as was applied to the set coil to bring about fault indication.

3.4.2 “Fault” and “No Fault” indication. Operational readiness is indicated by the “No Fault” condition and operational non-readiness by the “Fault” condition. “Fault” and “No Fault” indication shall be as specified (see 3.1). Colors shall be lusterless black as specified in FED-STD-595/37038, or black anodize, and lusterless white as specified in FED-STD-595/37875, or clear anodize. Other colors shall be as specified (see 3.1).

3.4.3 Termination. Indicators shall be terminated with solder terminals or wire leads as specified (see 3.1).

3.4.3.1 Solder terminals. Solder terminals shall be wire type or rigid type and shall be designed to prohibit shorting between terminals if the terminals become deformed. The solder terminal configuration (such as, loop, turret, flattened, and pierced, etc.) shall be designed to accommodate one No. 22 AWG wire either by wrapping or insertion through a hole.

3.4.3.2 Wire leads. The insulation color of wire leads shall be as specified (see 3.1).

3.4.4 Color. The exterior surface of the indicator shall be Lusterless Black in FED-STD-595/37038 or black anodize.

3.4.5 Threaded parts. Threaded parts shall be in accordance with FED-STD-H28, and shall be as specified (see 3.1). Threaded parts shall engage by at least three full threads.

3.4.6 Case. The indicator shall be designed as to prevent any electrical contact between the case and the coil. However, the case may be a part of the magnetic circuit.

3.4.7 Window. The indicator shall have a glass window. When specified (see 3.1), the glass shall have an anti-reflection coating (see 4.5.20).

3.4.8 Coils. Coils shall be electrically insulated from the frame and the case and shall be rigidly secured to prevent any change in the relative position of the parts. Coils shall be designed for continuous operation at rated voltage.

3.4.9 Springs. Springs shall be fabricated from non-corrosive materials and may be plated, except that zinc, cadmium, or unfused tin plating shall not be used within the case of the indicator.

3.4.10 Stabilization of permanent magnets. Permanent magnets and magnetic assemblies shall be artificially aged to prevent decay of flux levels. The residual flux in the permanent magnet assemblies shall be reduced to a level where it will not be affected by demagnetizing forces encountered in normal service, handling, or any of the tests specified herein.

3.4.11 Diodes (when specified, see 3.1). Coil transient suppression and steering diodes shall be internally connected as specified (see 3.1). The diodes shall not be caused to conduct or be damaged by the transient and spike voltages permitted by MIL-STD-704. The diodes shall not be damaged or permit damage to the indicator if the polarity of the coil voltage is reversed.

3.5 Insulation resistance. When measured as specified in 4.5.2, the insulation resistance shall be 100 megohms, minimum.

3.6 Dielectric withstanding voltage. When indicators are tested as specified in 4.5.3, the leakage current shall not exceed 1.0 milliampere (mA), and there shall be no evidence of damage due to arcing, flashover, or insulation breakdown (see 3.10).

3.7 Operating voltage. When tested as specified in 4.5.4 a & b, indicators shall show no evidence of damage and shall not malfunction (see 6.6 a). In addition, mechanically resettable indicators shall reset in 10 seconds, maximum (see 3.10).

3.7.1 Transfer pulse length. When the operating voltage is tested as specified in 4.5.4.1, indicators shall perform as specified (see 3.1).

3.8 DC resistance. When indicators are tested as specified in 4.5.5, the dc resistance shall be within the applicable minimum and maximum values specified (see 3.1).

3.9 Coil transient suppression (indicators with diodes only). When indicators are tested as specified in 4.5.6, the maximum absolute value of the non-steady-state voltage shall not exceed the nominal rated coil voltage by more than 50 percent.

3.10 Thermal shock. When tested as specified in 4.5.7, indicators shall meet the following requirements:

Visual inspection	- There shall be no evidence of cracking, peeling, or flaking of the finish.
Insulation resistance at +125 degrees C 1/	- Shall be 100 megohms, minimum.
Dielectric withstanding voltage at -65 degrees C, and +125 degrees C 1/	- Shall be as specified in 3.6
Operating voltage at -65 degrees C, and +125 degrees C 1/	- Shall be as specified in 3.7, except for mechanically resettable indicators at -65 and +125 degrees C as follows: - a. The reset shall be accomplished electrically by applying a pulse and reversing the polarity of the input operating voltage. - b. If mechanically resetting, the reset shall be aided (see 3.4.1.1) when testing at -65 and +125 degrees C.

1/ Or applicable temperature specified. See 3.1.

3.11 Terminal strength (indicators with solder terminals only). When indicators are tested as specified in 4.5.8, there shall be no breakage, loosening, or rotation of the terminals, and the indicators shall function properly.

3.12 Shock (specified pulse). When tested as specified in 4.5.9, indicators shall not malfunction or false transfer (see 6.6.a.&.b) in the “Fault” and “No Fault” positions and shall meet the operating voltage requirement (see 3.7).

3.13 Vibration, high frequency. When tested as specified in 4.5.10, indicators shall not exhibit damage and shall meet the operating voltage requirement (see 3.7). Indicators shall not malfunction or false transfer.

3.14 Salt spray (corrosion) indicators with metallic bodies only. When tested as specified in 4.5.11, indicators shall not exhibit corrosion, peeling, chipping, or blistering of the finish or exposure of base metal, and shall meet the operating voltage requirement (see 3.7).

3.15 Moisture resistance. When tested as specified in 4.5.12, indicators shall not exhibit breaking, cracking, or chipping of the finish and shall meet the dielectric withstanding voltage (see 3.6), operating voltage (see 3.7), and dc resistance (see 3.8) requirements.

3.16 Resistance to soldering heat (indicators with solder terminals only). When tested as specified in 4.5.13, indicators shall function properly.

3.17 Magnetic susceptibility. When tested as specified in 4.5.14, indicators shall not malfunction or false transfer.

3.18 Electromagnetic interference. When tested as specified in 4.5.15, indicators shall not malfunction or false transfer.

3.19 Random vibration. When tested as specified in 4.5.16, indicators shall not malfunction or false transfer. Indicators shall not exhibit damage and shall meet the operating voltage requirement (see 3.7).

3.20 Barometric pressure (reduced). When tested as specified in 4.5.17, indicators shall withstand the test voltage specified with no evidence of damage due to arcing, flashover, or insulation breakdown.

3.21 Solderability (indicators with solder terminals only). When indicators are tested as specified in 4.5.18, the solder terminals shall be evaluated as specified for lugs in method 208 of MIL-STD-202.

3.22 Life. When tested as specified in 4.5.19, indicators shall not malfunction and shall meet the operating voltage requirement (see 3.7).

3.23 Marking (see 6.2d). Marking of indicators shall conform to method I of MIL-STD-1285, and shall include the military PIN and manufacturer's source code. The date code and dc rated voltage shall also be included. In addition, indicators with solder terminals shall be marked as specified (see 3.1). Terminal identification shall be adjacent to the terminal so as to properly identify each terminal.

3.24 Workmanship. Indicators shall be processed in such a manner as to be uniform in quality and shall be free of cracks, chips, sharp edges, and burrs. Indicators shall be free from defects that will affect life, serviceability, performance or appearance.

4. VERIFICATION

4.1 Classification of inspections. The inspection requirements specified herein are classified as follows:

a. Qualification inspection (see 4.3).

b. Conformance inspection (see 4.4).

4.1.1 Test equipment and inspection. Test and measuring equipment and inspection facilities of sufficient accuracy, quality, and quantity to permit performance of the required inspection shall be established and maintained by the contractor. The establishment and maintenance of a calibration system to control the accuracy of the measuring and test equipment shall be as specified in ISO-10012 or NCSL Z540.3 or equivalent as approved by the qualifying activity.

4.2 Inspection conditions. Unless otherwise specified herein, all inspections shall be performed in accordance with the test conditions specified in the "General Requirements" of MIL-STD-202.

4.3 Qualification inspection. Qualification inspection shall be performed at a laboratory acceptable to the Government (see 6.5) on sample units produced with equipment and procedures normally used in production.

4.3.1 Sample size. Twelve indicators of a single part number shall be subjected to qualification inspection.

4.3.2 Inspection routine. The sample shall be subjected to the inspections specified in table I, in the order shown. All sample units shall be subjected to the inspections of group I. The sample shall then be divided equally into 3 (three) separate sets of four units, so that a different set of four sample units shall be subjected to the inspections of group II, group III, and group IV.

4.3.3 Failures. One or more failures within group I, group II, group III, or group IV during the table I inspections shall be cause for failure of qualification.

4.3.4 Extent of qualification. Qualification of indicators with anti-reflection coating will include qualification for those indicators without anti-reflection coating, and vice versa. Qualification of indicators with diodes will include qualification for those indicators without diodes. Qualification of indicators with one type of termination (see 3.4.3) will include qualification for indicators with the other type of termination, provided six additional indicators with the other type of termination are subjected to and successfully pass the qualification inspection shown in table I (all six samples subjected to group I and two samples each subjected to groups II, III, and IV). Qualification of a single PIN will include qualification for indicators with different operating voltage ranges (see 3.1) on the same specification sheet provided two additional indicators of each operating voltage range are subjected to and successfully pass the thermal shock test specified in 4.5.7, except dielectric withstanding voltage and insulation resistance need not be measured.

4.3.5 Retention of qualification. Every 24 months, the manufacturer shall verify the retention of qualification to the qualifying activity. Retention is based upon meeting the following requirements:

a. The manufacturer has not modified the design of the item.

b. The specification requirements for the item have not been amended, so far as to affect the character of the item.

c. Lot rejection for group A does not exceed the sampling plan.

d. The requirements of group B inspections are met, every 24 months.

4.4 Conformance inspection.

4.4.1 Inspection of product for delivery. Inspection of product for delivery shall consist of group A inspection.

4.4.2 Inspection lot. An inspection lot shall consist of all indicators of a single part number, produced under essentially the same conditions, and offered for inspection at one time.

4.4.2.1 Group A inspection. Group A inspection shall consist of the inspections specified in table II, in the order shown.

4.4.2.1.1 Sampling plan. All indicators shall be subjected to group A inspection. If one or more defects are found, the lot shall be rejected, rescreened, and defects removed.

4.4.2.1.2 Rejected lots. If an inspection lot is rejected, the contractor may rework it to correct the defects, or screen out the defective units and resubmit for re-inspection. If one or more defects are found in the second sample, the lot shall be rejected and shall not be supplied to this specification. Such lots shall be separate from new lots and shall be clearly identified as re-inspected lots.

TABLE I. Qualification inspection.

Inspection	Requirement paragraph	Test method paragraph	Number of sample units to be inspected	Number of Failures Allowed
Group I				
Visual and dimensional inspection	3.1, 3.3 to 3.4.11 incl., 3.23 and 3.24	4.5.1		
Insulation resistance	3.5	4.5.2		
Dielectric withstanding voltage	3.6	4.5.3		
Operating voltage	3.7	4.5.4 a & b		
Transfer pulse length	3.7.1	4.5.4.1	12	0
DC resistance	3.8	4.5.5		
Coil transient suppression (indicators with diodes only)	3.9	4.5.6		
Thermal shock	3.10	4.5.7		
Insulation resistance	3.5	4.5.2		
Dielectric withstanding	3.6	4.5.3		
Operating voltage	3.7	4.5.4 a & b		
Group II				
Terminal strength (indicators with solder terminals only)	3.11	4.5.8		
Shock (specified pulse)	3.12	4.5.9		
Operating voltage	3.7	4.5.4 a & b		
Vibration, high frequency	3.13	4.5.10	4	0
Operating voltage	3.7	4.5.4 a & b		
Random vibration	3.19	4.5.16		
Operating voltage	3.7	4.5.4 a & b		
Salt spray (corrosion) (indicators with metallic bodies only)	3.14	4.5.11		
Operating voltage	3.7	4.5.4 a & b		
Moisture resistance	3.15	4.5.12		
Insulation resistance	3.5	4.5.2		
Dielectric withstanding voltage	3.6	4.5.3		
Operating voltage	3.7	4.5.4 a & b		
DC resistance	3.8	4.5.5		
Group III				
Resistance to soldering heat (indicators with solder terminals only)	3.16	4.5.13		
Magnetic susceptibility	3.17	4.5.14	4	0
Electromagnetic interference	3.18	4.5.15		
Barometric pressure (reduced)	3.20	4.5.17		
Solderability (indicators with solder terminals only)	3.21	4.5.18		
Group IV				
Life	3.22	4.5.19	4	0
Operating voltage	3.7	4.5.4 a & b		

TABLE II. Group A inspection.

Inspection	Requirement paragraph	Test method paragraph
Visual and dimensions inspection	3.1, 3.3 to 3.4.11 incl., 3.23 and 3.24	4.5.1
Insulation resistance	3.5	4.5.2
Dielectric withstanding voltage	3.6	4.5.3
Operating voltage	3.7	4.5.4 a & b
Transfer pulse length	3.7.1	4.5.4.1
DC resistance	3.8	4.5.5
Coil transient suppression (indicators with diodes only) 1/	3.9	4.5.6
Thermal shock	3.10	4.5.7
Insulation resistance	3.5	4.5.2
Dielectric withstanding voltage	3.6	4.5.3
Operating voltage	3.7	4.5.4 a & b

1/ Photographs are required for qualification inspection only.

4.4.3 Periodic inspection. Periodic inspection shall consist of group B. Except where the results of these inspections show noncompliance with the applicable requirements (see 6.5), delivery of products which have passed group A shall not be delayed pending the results of these periodic inspections.

4.4.3.1 Group B inspection. Group B inspection shall consist of the inspections specified in table III, in the order shown. Group B inspection shall be made on sample units selected from inspection lots which have passed group A inspection.

4.4.3.1.1 Sampling plan. Twelve indicators representing each specification sheet, as applicable (see 3.1), shall be selected once each 24 months. The indicators shall be representative of production during the previous 24-month period, but may be limited to two PINs representing the distinctions specified in 4.3.4. All units shall be subjected to subgroup 1 inspection and then divided into 2 (two) separate sets of six samples for subgroup 2 and subgroup 3 inspections. If one or more defects are found, the sample shall be considered to have failed, shall be rejected, rescreened, and defects removed.

4.4.3.1.2 Rejected lots. If an inspection lot is rejected, the contractor may rework it to correct the defects, or screen out the defective units and resubmit for re-inspection. If one or more defects are found in the second sample, the lot shall be rejected and shall not be supplied to this specification. Such lots shall be separate from new lots and shall be clearly identified as re-inspected lots.

4.4.3.1.3 Disposition of sample units. Sample units which have been subjected to group B inspection shall not be delivered on the contract.

4.4.3.1.4 Noncompliance. If a sample fails to pass group B inspection, the supplier shall take corrective action on the materials or processes, or both, as warranted, and on all units of product, which can be corrected and were manufactured under essentially the same conditions with essentially the same materials, processes, etc. and are considered subject to the same failure. Acceptance of the product shall be discontinued until corrective action, which is acceptable to the Government, has been taken. After the corrective action has been taken, group B inspection shall be repeated on additional sample units (all inspection, or the inspection which the original sample failed, at the option of the Government). Group A inspection may be reinstituted; however, final acceptance shall be withheld until the group B reinspection has shown that the corrective action was successful. In the event of failure after reinspection, information concerning the failure and the corrective action taken shall be furnished to the responsible inspection activity and the qualifying activity.

4.5 Methods of inspection.

4.5.1 Visual and dimensional inspection. Indicators shall be inspected to verify that materials, design and construction, marking, and workmanship are in accordance with the applicable requirements (see 3.1, 3.3 to 3.4.11 inclusive, 3.23 and 3.24).

TABLE III. Group B inspection.

Inspection	Requirements Paragraph	Test method paragraph	Number of sample units to be inspected
Subgroup 1			
Terminal strength (indicators with solder terminals only)	3.11	4.5.8	
Thermal shock	3.10	4.5.7	
Insulation resistance	3.5	4.5.2	
Dielectric withstanding voltage	3.6	4.5.3	
Operating voltage	3.7	4.5.4 a & b	
Shock (specified pulse)	3.12	4.5.9	
Operating voltage	3.7	4.5.4 a & b	
Vibration, high frequency	3.13	4.5.10	
Operating voltage	3.7	4.5.4 a & b	
Random vibration frequency	3.19	4.5.16	12
Operating voltage	3.7	4.5.4 a & b	
Salt spray (corrosion)	3.14	4.5.11	
Operating voltage	3.7	4.5.4 a & b	
Moisture resistance	3.15	4.5.12	
Insulation resistance	3.5	4.5.2	
Dielectric withstanding voltage	3.6	4.5.3	
Operating voltage	3.7	4.5.4 a & b	
DC resistance	3.8	4.5.5	
Subgroup 2			
Resistance to soldering heat (indicators with solder terminals only)	3.16	4.5.13	
Magnetic susceptibility	3.17	4.5.14	
Electromagnetic interference	3.18	4.5.15	6
Barometric pressure (reduced)	3.20	4.5.17	
Solderability (indicators with solder terminals only)	3.21	4.5.18	
Subgroup 3			
Life	3.22	4.5.19	6
Operating voltage	3.7	4.5.4 a & b	

4.5.2 Insulation resistance (see 3.5). Indicators shall be tested in accordance with MIL-STD-202 method 302. The following details shall apply:

a. Test condition B.

b. Points of measurement: Between coils, and the case and coil(s), as applicable. Measurements shall be made in either the “Fault” or “No Fault” positions.

4.5.3 Dielectric withstanding voltage (see 3.6). Indicators shall be tested in accordance with MIL-STD-202 method 301. The following details and exceptions shall apply:

a. Magnitude of test voltage: 500 V ac rms.

b. Application of test voltage: Between coils, and the case and coil(s), as applicable.

c. Maximum leakage current: 1 mA.

d. Inspection after test (see 3.6).

4.5.4 Operating voltage (see 3.7). Indicators shall be tested as follows:

a. The applicable rated voltage specified (see 3.1) shall be applied for a minimum of 3 seconds. The voltage shall then be reduced to the minimum operating voltage specified (see 3.1). The voltage shall then be removed and the indicator reset. The indicator shall then be energized at this minimum operating voltage with a minimum pulse (see 3.1) and then reset. This procedure shall be repeated three more times (total of four times). See figure 1.

b. The applicable rated voltage specified (see 3.1) shall be applied for a minimum of 3 seconds. The voltage shall then be adjusted to the maximum operating voltage specified (see 3.1). The voltage shall then be removed and the indicator reset. The indicator shall then be energized at this maximum operating voltage with a minimum pulse (see 3.1) and then reset. This procedure shall be repeated three more times (total of four times). See figure 1.

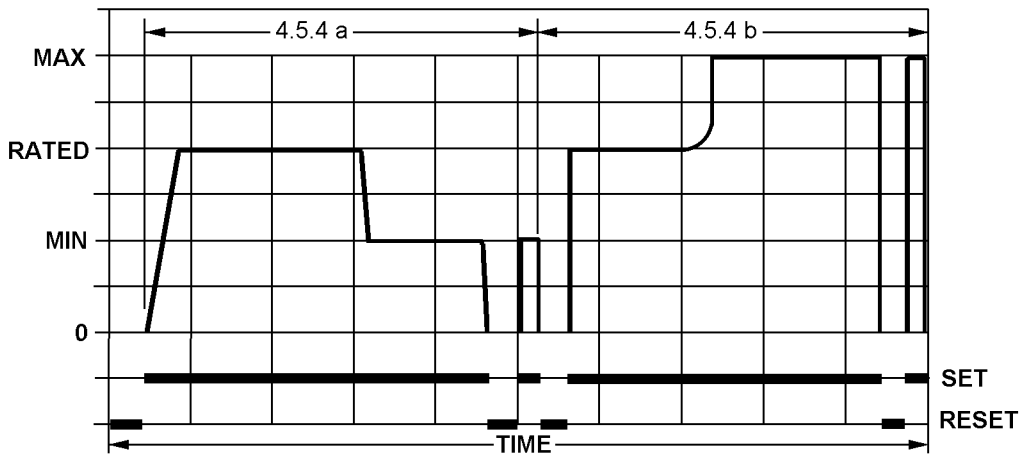

NOTE: RESET can be either mechanical or electrical, see 3.1

FIGURE 1. Operating voltage test.

4.5.4.1 Transfer pulse length (see 3.7.1). Indicators shall be subjected to the specified pulses at the applicable rated and operating voltages specified (see 3.1). An oscilloscope shall be used to monitor the pulse length or a calibrated pulse generating device that is approved by the qualifying activity.

4.5.5 DC resistance (see 3.8). Indicators shall be tested in accordance with method 303 of MIL-STD-202. The test voltage applied shall be the applicable rated voltage specified. Tests shall be at +125 degrees C, ambient (+25 degrees C) and -65 degrees C for group B and qualification. Tests shall be at +25 degrees C for group A inspection.

4.5.6 Coil transient suppression (indicators with diodes only) (see 3.9). The voltage across the coil terminals shall be measured when a low transient inducing switch external to the indicator is opened to remove rated voltage (see 3.1) from the coil. The recording system shall consist of a. or b.:

a. An oscilloscope and camera.

b. An equivalent high input impedance, high speed response recording instrument.

4.5.7 Thermal shock (see 4.3.4 and 3.10). Indicators shall be tested in accordance with method 107 of MIL-STD-202. The following details and exception shall apply:

a. Test condition: Unless otherwise specified (see 3.1), B-3 (for qualification and group B inspections) and B (for group A inspection).

b. Measurements during cycling: During the final cycle, indicators shall be held for 30 minutes, minimum, at the temperature extremes before the following applicable measurements are taken:

1. Step 1: Dielectric withstanding voltage and operating voltage shall be measured at -65 degrees C as specified in 4.5.3 and 4.5.4 a & b, respectively.

2. Step 3: Insulation resistance, dielectric withstanding voltage, and operating voltage shall be measured at +125 degrees C (or at applicable temperature specified, see 3.1), as specified in 4.5.2, 4.5.3, and 4.5.4 a & b, respectively.

4.5.8 Terminal strength (indicators with solder terminals only, see 3.11). Indicators shall be tested in accordance with method 211 of MIL-STD-202. The following details shall apply:

a. Test condition A, C, or E, as specified (see 3.1). Applied forces shall be as specified (see 3.1).

b. Inspection after test: The indicator shall transfer, when rated voltage is applied.

4.5.9 Shock (specified pulse, see 3.12). Indicators shall be tested in accordance with of MIL-STD-202 method 213. The following details shall apply:

a. Test condition I.

b. Inspection before and after test.

4.5.10 Vibration, high frequency (see 3.13). Indicators shall be tested in accordance with MIL-STD-202 method 204. The following details and exception shall apply:

a. Mounting: Prior to test, one indicator shall be mounted on the test table and the operating voltage shall be measured with the table coil de-energized. The measurement shall then be repeated with the table coil energized. If the value measured with the table coil energized varies more than ± 5 percent from that obtained with the table coil de-energized, magnetic shielding shall be added, so that the value measured with the table coil energized does not vary more than ± 5 percent from the value measured with the table coil de-energized.

b. Test condition D, or as specified (see 3.1).

c. Measurements (see 3.13).

4.5.11 Salt spray (corrosion, see 3.14). Indicators shall be tested in accordance with MIL-STD-202 method 101. The following details and exception shall apply:

a. Test condition B.

b. After exposure: Indicators shall be washed and air dried for 24 hours. Indicators shall then meet the operating voltage requirements (see 3.7).

4.5.12 Moisture resistance (see 3.15). Indicators shall be tested in accordance with method 106 of MIL-STD-202. The following detail and exception shall apply:

a. After high humidity: The insulation resistance shall be 100 megohms, minimum.

b. After drying, see 3.15.

4.5.13 Resistance to soldering heat (indicators with solder terminals only, see 3.16). Indicators shall be tested in accordance with method 210 of MIL-STD-202. The following details shall apply:

a. Depth of immersion in molten solder: One-half the exposed length of the terminal.

b. Test condition B.

c. Cooling time: 30 to 60 seconds.

d. Inspection after test: The indicator shall transfer, when rated voltage is applied.

4.5.14 Magnetic susceptibility (see 3.17). Indicators shall be slowly rotated 360 degrees around each of 3 (three) mutually perpendicular axes within a magnetic field of 15 to 18 gauss, with a pause of 10 seconds every 45 degrees. This test shall be conducted with the indicator in both of the “Fault” and “No Fault” states of display.

4.5.15 Electromagnetic interference (see 3.18). Indicators shall be mounted in a box as shown on figure 2. Wire shall be wrapped around the box and subjected to a 400 Hz current of sufficient magnitude to produce a 20 ampere-turns field. This test shall be conducted with the indicator in both of the “Fault” and “No Fault” states of display.

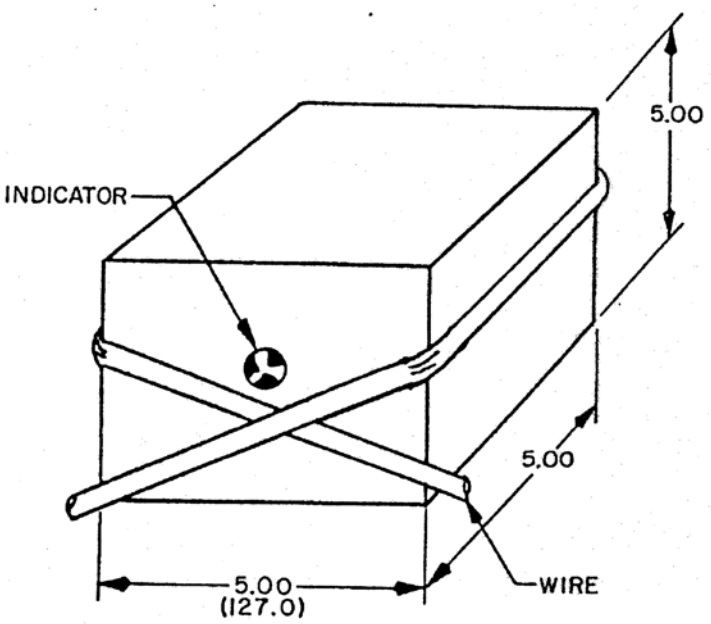

NOTES:
1. Dimensions are in inches.
2. The metric equivalent is given in millimeters and for information only.

FIGURE 2. EMI test fixture.

4.5.16 Random vibration (see 3.19). Indicators shall be tested in accordance with method 214 of MIL-STD-202, unless otherwise specified (see 3.1). Test conditions and curve required according to MIL-STD-202 shall be specified on each slash sheet (see 3.1).

4.5.17 Barometric pressure (reduced, see 3.20). Indicators shall be tested in accordance with method 105 of MIL-STD-202. The following details and exception shall apply:

a. Method mounting: By normal mounting means.

b. Test condition D.

c. Tests during subjection to reduced pressure: Dielectric withstanding voltage shall be measured as specified in 4.5.3, except the test voltage shall be 350 V ac rms.

d. Inspection after test (see 3.20).

4.5.18 Solderability (indicators with solder terminals only, see 3.21). Indicators shall be tested in accordance with method 208 of MIL-STD-202. The following details apply:

a. Number of terminations on each part to be tested shall be 2 (two).

b. Inspection after test (see 3.21).

4.5.19 Life (see 3.22). Indicators shall be cycled at a rate of 10 ± 1 operations per minute for a minimum of 10,000 complete operations (see 6.6 c) or as specified on individual specification sheets (see 3.1). As an option for the MIL-PRF-26543/3 only, and at the discretion of the manufacturer, the operating life test may be performed at a rate of 30 ± 1 operations per minute.

4.5.20 Window anti-reflection coating (see 3.4.7). When specified, the window shall have an anti-reflection coating in accordance with MIL-C-675 or an equivalent.

5. PACKAGING

5.1 Packaging. For acquisition purposes, the packaging requirements shall be as specified in the contract or order (see 6.2). When packaging of materiel is to be performed by DoD or in-house contractor personnel, these personnel need to contact the responsible packaging activity to ascertain packaging requirements. Packaging requirements are maintained by the Inventory Control Point's packaging activities within the Military Service or Defense Agency, or within the Military Service's System Commands. Packaging data retrieval is available from the managing Military Department's or Defense Agency's automated packaging files, CD-ROM products, or by contacting the responsible packaging activity.

6. NOTES

(This section contains information of a general or explanatory nature that may be helpful, but is not mandatory.)

6.1 Intended use. The fault locating indicators specified herein are for military unique applications requiring ruggedized design and allow proper performance under extreme military operating conditions, which include vibration (20g peak), thermal shock (- 65 degrees C to +125 degrees C), mechanical shock (100 G's), and high humidity and temperature. There are multiple weapon system uses for Army, Navy, and Air Force, which include various aircraft, helicopters, aircraft carriers, and submarines. Commercial components are not designed to withstand these military environments.

6.1.1 Indicators. These Microminiature indicators sense fault signals and provide a visual indication of the condition of the equipment monitored. These indicators quickly pinpoint malfunctions and eliminate the need for auxiliary test equipment to perform checks.

6.2 Acquisition requirements. Acquisition documents should specify the following:

a. Title, number, and date of this specification.

b. Title, number, and date of the specification sheet, and the PIN (see 3.1).

c. Packaging (see 5.1).

d. If special or additional identification marking is required (see 3.23).

6.3 Tin whisker growth. The use of alloys with tin content greater than 97 percent, by mass, may exhibit tin whisker growth problems after manufacture. Tin whiskers may occur anytime from a day to years after manufacture and can develop under typical operating conditions, on products that use such materials. Conformal coatings applied over top of a whisker-prone surface will not prevent the formation of tin whiskers. Alloys of 3 percent lead, by mass, have shown to inhibit the growth of tin whiskers. For additional information on this matter, refer to ASTM-B545 (Standard Specification for Electrodeposited Coatings of Tin) (see 3.3.1).

6.4 Environmentally preferable material. Environmentally preferable materials should be used to the maximum extent possible to meet the requirements of this specification. As of the dating of this document, the U.S. Environmental Protection Agency (EPA) is focusing efforts on reducing 31 priority chemicals. The list of chemicals and additional information is available on their website http://www.epa.gov/osw/hazard/wastemin/priority.htm. Included in the EPA list of 31 priority chemicals are cadmium, lead, and mercury. Use of these materials should be minimized or eliminated unless needed to meet the requirements specified herein (see 3.2).

6.5 Qualification (see 4.3). With respect to products requiring qualification, awards will be made only for products which are, at the time of award of contract, qualified for inclusion in the applicable Qualified Products List QPL-83287, whether or not such products have actually been so listed by that date. The attention of the contractors is called to these requirements, and manufacturers are urged to arrange to have the products that they propose to offer to the Federal Government tested for qualification in order that they may be eligible to be awarded contracts or orders for the products covered by this specification. Information pertaining to qualification of products may be obtained from the DLA Land and Maritime (Attn: VQH), 3990 East Broad Street, Columbus, Ohio 43218-3990, Primary e-mail: vqh.kr@dla.mil. An online listing of products qualified to this specification may be found in the Qualified Products Database (QPD) at https://assist.dla.mil.

6.5.1 Provisions governing qualification (SD-6). Copies of "Provisions Governing Qualification" are available online at https://assist.dla.mil or from the Standardization Document Order Desk, 700 Robbins Avenue, Building 4D, Philadelphia, PA 19111-5094.

6.6 Definitions. For the purpose of this specification, the following definitions apply:

a. Malfunction. Malfunction is defined as failure to transfer from one state of display to another, upon application of the specified voltage and transfer pulse length (see 3.7).

b. False transfer. False transfer (see 3.12) is defined as transfer from one state of display to another upon application of:

1. Specified voltage and shorter than minimum specified pulse length.

and/or

2. Transfer from one state of display to another, which occurs with no input signal applied to the indicator under test.

c. Complete operation. Complete operation is defined as an electrical pulse to advance the indicator from a “No fault” to a “Fault” state of display and then reset from a “Fault” to “No Fault” state of display (see 4.5.19).

6.7 Subject term (key word) listing.

Case
Diodes
Dual coil
Magnetic circuit
Single coil
Springs

Solder terminals
Window
Wire leads

6.8 Amendment notations. The margins of this specification are marked with vertical lines to indicate modifications generated by this amendment. This was done as a convenience only and the Government assumes no liability whatsoever for any inaccuracies in these notations. Bidders and contractors are cautioned to evaluate the requirements of this document based on the entire content irrespective of the marginal notations.

CONCLUDING MATERIAL

Custodians:
Army – AV
Navy - AS
Air Force – 11
DLA – CC

Review activities:
Army – MI
Air Force – 99

Preparing activity:
DLA - CC

(Project 6625-2014-020)

NOTE: The activities listed above were interested in this document as of the date of this document. Since organizations and responsibilities can change, you should verify the currency of the information above using the ASSIST Online database at https://assist.dla.mil.