INCH-POUND
MIL-PRF-64266B
11 July 2016
SUPERSEDING
MIL-PRF-64266A
24 May 2014

PERFORMANCE SPECIFICATION

CONNECTORS, FIBER OPTIC, CIRCULAR AND RECTANGULAR, PLUG AND RECEPTACLE STYLE, MULTIPLE REMOVABLE GENDERLESS TERMINI, ENVIRONMENT RESISTING GENERAL SPECIFICATION FOR

This specification is approved for use by all Departments and Agencies of the Department of Defense.

1. SCOPE

1.1 Scope. This specification covers the performance requirements for circular and rectangular, plug and receptacle style, multiple removable genderless termini, fiber optic connectors that are for Department of Defense applications and that are compatible with multiple transmission element cables. Fiber optic connectors specified herein cover a family of general purpose, interconnection hardware providing a variety of compatible optical coupling arrangements. Connector parts specified within this specification include connector shells, connector inserts, connector backshells, connector backshell accessories, and connector dust caps.

1.1.1 Description. All connector styles are designed to assure proper orientation of the mating halves prior to mating. All connectors provide engagement between mated shells prior to terminus engagement and have the termini so located as to be protected from handling damage.

1.2 Classification. Plug and receptacle styles, as specified (see 3.1), must permit straight, wall (panel) mounted, jamnut mounted, right angle, and other connector configurations as required for cable system applications.

1.2.1 Connectors. Connectors fabricated to this specification are classified as follows:

a. Classes see (3.3.2):

A: Aluminum with conductive plating.
B: CRES, passivated.
C: Composite with conductive plating.
D: Aluminum with non-conductive finish.
E: Composite with non-conductive finish.

b. Temperature ranges. Temperature range designations are specified in table I.

c. Shell sizes. Shell size designations are B, C, D, and H for shell sizes 11, 13, 15, and 23, respectively.

Comments, suggestions, or questions on this document should be addressed to DLA Land and Maritime, ATTN: VAT, Post Office 3990, Columbus, OH 43218-3990, or emailed to: FiberOpticsGroup@dla.mil. Since contact information can change, you may want to verify the currency of this address information using the ASSIST Online database at https://assist.dla.mil.

AMSC N/A FSC 6060

TABLE I. Temperature range designation.

Temperature range designation	Operating temperature		Non-operating temperature		Storage temperature	
	ºF	ºC	ºF	ºC	ºF	ºC
1	-18 to +150	-28 to +65	-40 to +158	-40 to +70	-40 to +158	-40 to +70
2	-67 to +329	-55 to +165				

1.2.2 Termini classification. Termini are classified as described in MIL-PRF-29504/18 (terminus) and MIL-PRF-29504/19 (dummy terminus) and MIL-PRF-29504/20 (keyed terminus).

NOTE: Termini are not supplied with connectors acquired to this specification. When termini other than those qualified to MIL-PRF-29504 are used, the requirements stated herein may not be met.

1.3 Part or Identification Number (PIN). PINs to be used for connectors and accessories acquired to this specification are specified as follows:

M64266/	XX	-	X	X	XXX
Specification number	Connector specification sheet		Shell size designator	Class (material designator)	Specific designators 1/

1/ Up to 3 character alpha-numeric for insert arrangement number, shell size position, cable entry code, capture mechanism, and other connector or accessory specific designations, when specified, see 3.1.

Example: M64266/2-DD12

2. APPLICABLE DOCUMENTS

2.1 General. The documents listed in this section are specified in sections 3 and 4 of this specification. This section does not include documents cited in other sections of this specification or recommended for additional information or as examples. While every effort has been made to ensure the completeness of this list, document users are cautioned that they must meet all specified requirements documents cited in sections 3 and 4 of this specification, whether or not they are listed.

2.2 Government documents.

FEDERAL STANDARD

FED-STD-H28 - Screw-Thread Standard for Federal Services.

DEPARTMENT OF DEFENSE SPECIFICATIONS

MIL-S-901 - Shock Tests, H.I. (High-Impact) Shipboard Machinery, Equipment, and Systems, Requirements For.
MIL-A-8625 - Anodic Coatings for Aluminum and Aluminum Alloys.
MIL-PRF-29504 - Termini, Fiber Optic Connector, Removable, General Specification For.
MIL-PRF-29504/18 - Termini, Fiber Optic Connector, Removable, Environment Resisting, Genderless Terminus, Rear Release, Ceramic Ferrule, 1.25 MM Ferrule, (For MIL-PRF-64266 Connectors).
MIL-PRF-29504/19 - Termini, Fiber Optic Connector, Removable, Environment Resisting, Dummy Terminus, (For MIL-PRF-64266 Connectors).
MIL-PRF-29504/20 - Termini, Keyed, Fiber Optic Connector, Removable, Environment Resisting, Genderless Terminus, Rear Release, Ceramic Ferrule, 1.25 MM Ferrule, (For MIL-PRF-64266 Connectors).
MIL-PRF-49291 - Fiber, Optical, (Metric) General Specification For.

(See supplement 1 for list of specification sheets.)

DEPARTMENT OF DEFENSE STANDARDS

MIL-STD-790	-	Standard Practice for Established Reliability and High Reliability Qualified Products List (QPL) Systems for Electrical, Electronic, and Fiber Optic Parts Specifications.
MIL-STD-1373	-	Screw-Thread, Modified, 60 Degree Stub, Double.
MIL-STD-1678-2	-	Fiber Optic Cabling Systems Requirements and Measurements (Part 2: Optical Measurements) (Part 2 of 6 Parts)
MIL-STD-1678-3	-	Fiber Optic Cabling Systems Requirements and Measurements Physical, Mechanical, Environmental and Material Measurements (Part 3 of 6 Parts)
MIL-STD-1678-4	-	Fiber Optic Cabling Systems Requirements and Measurements (Part 4: Test Sample Configuration and Fabrication Requirements) (Part 4 of 6 Parts)
MIL-STD-1678-5	-	Fiber Optic Cabling Systems Requirements and Measurements (Part 5: Design Phase, Supplemental and Legacy Measurements) (Part 5 of 6 Parts)

DEPARTMENT OF DEFENSE HANDBOOKS

MIL-HDBK-454	-	General Guidelines for Electronic Equipment.

(Copies of these documents are available online at http://quicksearch.dla.mil or from the Standardization Document Order Desk, 700 Robbins Avenue, Building 4D, Philadelphia, PA 19111-5094).

2.3 Non-Government publications. The following documents form a part of this document to the extent specified herein. Unless otherwise specified, the issues of these documents are those cited in the solicitation or contract.

ASTM INTERNATIONAL

ASTM B117	-	Standard Practice for Operating Salt Spray (Fog) Apparatus.
ASTM D1149	-	Standard Test Methods for Rubber Deterioration-Surface Ozone Cracking in a Chamber.
ASTM G85	-	Standard Practice for Modified Salt Spray (Fog) Testing.

(Copies of these documents can be obtained online at http://www.astm.org/ or by contacting ASTM International, P.O. Box C700, 100 Barr Harbor Drive, West Conshohocken, PA, 19428-2959).

NATIONAL CONFERENCE OF STANDARDS LABORATORIES (NCSL)

NCSL-Z540.3	-	Calibration Laboratories and Measuring and Test Equipment General Requirements

(Copies of these documents can be obtained online at http://www.ncsli.org or by contacting National Conference of Standards Laboratories, 2995 Wilderness Place, Suite 107, Boulder, CO, 80301-5404.

SAE INTERNATIONAL

SAE-AS8879	-	Screw Thread - UNJ Profile, Inch Controlled Radius Root with Increased Minor Diameter.

(Copies of this document are available online at http://www.sae.org or from the SAE World Headquarters, 400 Commonwealth Drive, Warrendale, PA 15096-0001.)

TELECOMMUNICATIONS INDUSTRY ASSOCIATION/ELECTRONIC INDUSTRIES ALLIANCE

EIA-359	-	Special Colors.
EIA-364-81		Combustion Characteristics Test Procedure for Electrical Connector Housings, Connector Assemblies and Sockets.
EIA-364-83	-	Shell-to-Shell and Shell-to-Bulkhead Resistance Test Procedure for Electrical Connectors.
TIA/EIA-455		Standard Test Procedure for Fiber Optic Fibers, Cables, Transducers, Sensors, Connecting and Terminating Devices, and Other Fiber Optic Components.
TIA/EIA-455-1	-	Cable Flexing for Fiber Optic Interconnecting Devices.
TIA-455-2	-	Impact Test Measurements for Fiber Optic Devices.
EIA-455-3		Procedure to Measure Temperature Cycling Effects on Optical Fibers, Optical Cable, and Other Passive Fiber Optic Components.
TIA-455-6	-	Cable Retention Test Procedure for Fiber Optic Cable Interconnecting Devices.
TIA-455-13		Visual and Mechanical Inspection of Fiber Optic Components, Devices, and Assemblies. (FOTP-13)
TIA-455-14	-	Fiber Optic Shock Tests (Specified Pulse).
TIA/EIA-455-16	-	Salt Spray (Corrosion) Test for Fiber Optic Components.
TIA/EIA-455-20	-	Measurement of Change in Optical Transmittance.
TIA-455-21	-	Mating Durability of Fiber Optic Interconnecting Devices.
TIA-455-26	-	Crush Resistance of Fiber Optic Cable Interconnecting Devices.
TIA/EIA-455-32	-	Fiber Optic Circuit Discontinuities.
TIA-455-34	-	Interconnection Device Insertion Loss Test.
TIA-455-35	-	Fiber Optic Component Dust (Fine Sand) Test
TIA-455-36	-	Twist Test for Fiber Optic Connecting Devices.
TIA-455-42	-	Optical Crosstalk in Fiber Optic Components.
TIA/EIA-455-56		Test Method for Evaluating Fungus Resistance of Optical Fiber and Cable.
TIA-455-107	-	Determination of Component Reflectance or Link/System Return Loss Using a Loss Test Set.
TIA-455-189	-	Ozone Exposure Test for Fiber Optic Components.

(Copies are available online at www.tiaonline.org/standards/catalog/index.cfm or from TIA, 2500 Wilson Boulevard, Suite 300, Arlington, VA 22201, USA, ATTN: Standards Department.

2.4 Order of precedence. In the event of a conflict between the text of this document and the references cited herein, the text of this document takes precedence. Nothing in this document, however, supersedes applicable laws and regulations unless a specific exemption has been obtained.

3. REQUIREMENTS

3.1 Specification sheets. The individual item requirements shall be as specified herein and in accordance with the applicable specification sheet. In the event of any conflict between the requirements of this specification and the specification sheet, the latter shall govern.

3.2 Qualification. Fiber optic connectors and accessories furnished under this specification shall be products that are authorized by the qualifying activity for listing on the applicable qualified products list before contract award (see 4.7 and 6.3).

3.3 Materials. Materials shall be as specified herein and in the applicable specification sheets. In all cases, materials selected for use shall meet all qualification requirements as specified, and be of a type and quality to assure physical, chemical, and optical compatibility with the requirements of this specification. All materials used shall be nontoxic (see 3.3.5), non-nutrient to fungus (see 3.14.13) and manufactured to good workmanship quality (see 3.10.6). Materials chosen shall be the lightest practicable material suitable for the intended use. Materials shall not interfere with or degrade the terminus cleaning operation and shall provide 20 year service.

3.3.1 Connector parts. Connector shells shall be aluminum, composite material, or corrosion resistant (CRES) steel. Connector inserts and connectors with integral inserts (one piece shell and insert) shall be made of aluminum, a polymer material or corrosion resistant steel (CRES). Backshells, backshell accessories, and dust covers shall be aluminum, corrosion resistant (CRES) steel, or a polymer material.

3.3.2 Finish. The resultant finish on all connector parts shall be electrolytically compatible (see 3.3.7) within each class, and shall meet the requirements herein.

a. Aluminum and composite components: The finish used for external parts shall minimize reflections and shall meet the requirements herein. The finish used for internal parts shall be corrosion resistant.

b. CRES components: Unless otherwise specified (see 3.1), all exposed corrosion resistant steel parts shall be passivated and shall be treated to minimize reflections. CRES threads shall be treated in a manner to minimize galling and cold welding with mating parts. CRES parts which may be mated to non-CRES parts shall be treated to minimize scratching or damage to mating components during mating operations.

c. Electrolytic compatibility. Mating parts shall be of the same plating type when a conductive plating is used. Stainless steel shall not be mated to other materials with a conductive plating.

3.3.2.1 Finish configurations. Finish configurations A though E correspond with connector class letter A through E specified in 1.2.1a herein. Finishes A through E shall withstand 500 hour salt spray test. Resulting finishes A through C shall be conductive. Resultant finishes D and E shall be non-conductive.

3.3.2.2 Finish color. For the non-conductive coating, color on plug shell, receptacle shell, backshell and dust cover shall be black in accordance with EIA-359. For the cadmium electrolytically compatible (conductive) plating types, acceptable colors on plug shell, receptacle shell, backshell, and dust cover are identified as olive drab, green, brown, and gray in accordance with EIA-359. Colors shall be non-reflective.

3.3.2.3 Non-conductive finish, aluminum components. When the application does not require a conductive plating on an aluminum based connector; a non-conductive coating in accordance with MIL-A-8625 type III, Class 2, with supplemental impregnated, polytetrafluoroethylene (PTFE) coating shall be used in lieu of a conductive plating. Supplemental PTFE coating shall be the result of impregnating PTFE into the surface asperities of the anodic coating. Buildup per surface for this non-conductive finish shall be between 0.0007 to 0.0012 inch. Color of the non-conductive finish shall conform to 3.3.2.2. A lubricant shall be applied to the connector plug internal coupling ring threads and shall satisfy the lubricant requirements in 3.3.9. Use of a lubricant shall not be applied to the connector receptacle external mating male threads. For connectors with a base material of die cast aluminum where type III anodize is limited according to MIL-A-8625 section 3.4.3, type II anodize shall be used when the procuring activity does not authorize type III. For the ASR and inserts, a non-conductive coating in accordance with MIL-A-8625 type II or III may be used in lieu of a conductive plating.

3.3.3 Recycled, recovered, environmentally preferable, or biobased materials. Recycled, recovered, environmentally preferable, or biobased materials should be used to the maximum extent possible, provided that the material meets or exceeds the operational and maintenance requirements, and promotes economically advantageous life cycle costs.

3.3.4 Nonmetallic materials. Nonmetallic materials used in connector parts shall not be degraded by the use of solvents or cleaning agents, nor be degraded at the specified environmental conditions.

3.3.5 Toxic and hazardous products and formulations. Materials used in the connectors, backshells, backshell accessories, and dust covers shall not give off toxic or explosive fumes when exposed to flame. Materials used shall have no adverse effect on the health of personnel when used for its intended purpose.

3.3.6 Metals. Metals shall be corrosion resistant, or treated to be corrosion resistant. Unless otherwise specified (see 3.1), metals shall be nonmagnetic.

3.3.7 Dissimilar metals. The use of dissimilar metals in intimate contact should be avoided. When dissimilar metals are used in intimate contact with each other, protection against electrolysis and corrosion shall be provided.

3.3.8 Sealing compounds. Sealing compounds shall not flow at the maximum specified operating temperature (see 1.2.1b) or exhibit cracking at the minimum specified operating temperature (see 1.2.1b).

3.3.9 Lubricants. Lubricants used in the construction of the connectors shall satisfy the following criteria:

a. Lubricants shall be permanent and shall not require replacement during the lifetime of the connector.

b. Lubricants shall not migrate to the optical interfaces resulting in the degradation of optical performance.

c. Lubricants shall be useful over the environmental conditions specified herein.

d. Lubricants shall not be affected by cleaning solvents.

e. Lubricants shall not corrode or otherwise degrade connector parts.

3.3.10 Magnetic permeability. The relative permeability of the terminated, assembled and fully mated connector assembly shall be less than 2.0 mH.

3.4 Design and construction. Connector parts shall conform to appendix A, figures A-1 through A-6 specified herein, and as specified (see 3.1).

3.4.1 General. Connectors shall be designed to be compatible with optical fibers and cables as specified (see 3.1).

3.4.2 Seals. Seals shall provide environmental isolation for the optical contact junctions and connector interior parts. Grommets, O-rings, boots, gaskets, or other sealing devices, as needed by the connector design, shall accomplish their intended purpose and meet all test requirements as specified herein.

3.4.2.1 Optical junction sealing. Optical junctions shall be sealed against moisture and contamination as specified herein.

3.4.2.2 Cable sealing. Connectors shall seal the terminating cables as specified herein.

3.4.3 Interchangeability and interoperability. Connector parts shall be interchangeable and interoperable as specified in 3.4.3.1 and 3.4.3.2.

3.4.3.1 Interchangeability. All connector parts having the same military PIN shall be physically and functionally interchangeable without need for modification of such items or of the mating equipment.

3.4.3.2 Interoperability. All connectors of the same PIN shall be interoperable. Upon qualification of the first manufacturer, all subsequent manufacturers shall provide proof of interoperability with each qualified manufacturer as specified in 4.10. The connectors shall meet the requirements of 3.11.1, 3.12.3, 3.12.4, and 3.14.18 for each specified interoperability condition (see 4.10).

3.5 Connector parts.

3.5.1 Shells. The connector shells shall retain the connector insert. The plug to receptacle connections shall be environmentally and water sealed. A visual full mate indicator is required.

3.5.1.1 Plugs. Plugs shall be of the inline (straight) type as specified (see 3.1).

3.5.1.2 Receptacles. Receptacles shall be of the wall (panel) mount and jamnut types as specified (see 3.1). A visual full mate indicator shall be provided and shall be a red band that is located on the receptacle. Red color of band shall minimize reflections and maximize contrast of shell finish color. Further marking and color requirements of the visual full mate indicator shall be in accordance with 3.10.3.1. The full visual indicator shall be not visible when the plug and receptacle are completely mated.

3.5.1.3 Engagement of connectors. Counterpart connectors of any arrangement and accessories shall be capable of being fully engaged and disengaged without the use of tools (except shell size 23). Overall connector engagement/alignment sequence shall provide for keying for course alignment, alignment sleeve retainer (ASR) guide pins providing finer alignment with connector inserts, termini ferrules engaging alignment sleeves, and final shell coupling and thread engagement. An alternative to a red band for a visual full mate indicator is allowed and shall consist of marked boundary lines with crosshatching in between the boundary lines.

3.5.1.4 Coupling mechanism. Coupling rings of the connectors shall be knurled, and designed so that plug and receptacle optical termini shall approach or recede from each other as the coupling mechanism is respectively tightened by clockwise rotation or loosened in the counterclockwise direction as viewed from the rear of the plug connector. The coupling mechanism shall be captive on the plug to mate with the receptacle shell. Coupling ring and coupling screw threads shall be in accordance with MIL-STD-1373 and as shown on figures A-4 and A-5, and as specified (see 3.1). If the coupling threads must be lubricated to meet the requirements contained herein, the lubricant shall meet all of the requirements specified herein (see 3.3.9).

3.5.1.5 Plug and receptacle shell polarization (keying). Polarization keying shall be incorporated in the shells of plugs and receptacles to assure correct alignment of the inserts before mating is permitted. The polarization shall be accomplished by integral keys and keyways (see figure A-3) in the plug and receptacles shells. The keying shall be designed to prevent physical contact of the mating optical termini, or of the termini with the insert surface of the counterpart connector until the keyways are properly aligned for engagement and coupling mechanisms are engaged.

3.5.1.6 Coupling nut locking mechanism. The connector plug coupling nut shall include a ratchet type locking mechanism (anti-coupling device) to ensure that a mated connector maintains full thread engagement (maintains complete coupling). Complete coupling of the mated connector is achieved by a clockwise rotation of the coupling nut until insert-to-insert bottoming is achieved. The anti- coupling mechanism or feature shall be between the connector plug coupling nut and the connector plug shell only. The locking mechanism shall be sufficient to ensure no backing off of the coupling nut during mechanical shock or vibration.

3.5.2 Alignment sleeve retainer (ASR) (see MIL-PRF-64266/9). The alignment sleeve retainer (ASR) is an interchangeable part and defines the gender of the connector assembly. The alignment sleeves shall provide the mechanical and optical alignment with mating two termini ferrules for each ASR cavity, be made from ceramic and be captive within the alignment sleeve retainer. Installation orientation of the ASR onto the connector endface shall be unique to that endface and shall be not capable of being installed in two orientations by rotation of 180 degrees. Unless otherwise specified, the ASR shall be installed in the receptacle. The ASR shall be retained to the connector insert by means of a jackscrew. The jackscrew shall not loosen nor the ASR detach under vibration or shock. The screw head shall be flush or recessed to the ASR. The jackscrew shall push the ASR off of the termini during ASR removal. The desired functional alignment sequence of the ASR is guide pins, jackscrew, and then termini/alignment sleeves.

3.5.3 Inserts. Inserts may be either removable or non removable. Removable inserts shall be secured to prevent rotation within the connector shell. Inserts shall be such that they will not crack, chip, or break in normal service or assembly. Multiple piece inserts are permissible under the constraint that the insert retention radial strength is met after the conclusion of both group II and group III testing. The insert dimensions shall be as specified (see 3.1). The insert termini cavity configuration shall conform to the dimensions specified on figure 1. Insert to insert bottoming is required when the plug and receptacle are mated. Insert to insert bottoming shall occur through the ASR. Non-integral inserts shall seal to the connector plug or receptacle.

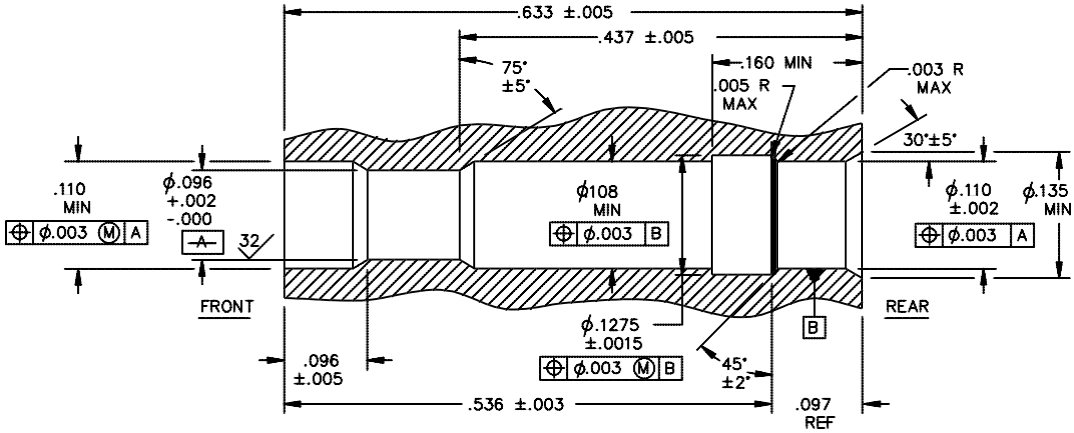

inches	mm	inches	mm	inches	mm	inches	mm
.0015	.04	.096	2.44	.1275	3.24	.536	13.61
.002	.05	.097	2.46	.135	3.43	.633	16.08
.003	.08	.108	2.74	.160	4.06		
.005	.13	.110	2.79	.425	10.80		

FIGURE 1. Termini cavity dimensions.

3.5.4 Termini. Removable, environment resisting fiber optic termini shall be used with these connectors for interconnecting fiber optic cables. The termini are not supplied with connectors acquired to this specification. Termini, for use with the connectors

specified herein, shall be in accordance with MIL-PRF-29504/18 (optical terminus) and MIL-PRF-29504/19 (dummy terminus) and MIL PRF-29504/20 (keyed optical terminus) (see 3.1).

3.5.4.1 Number of termini, arrangement, and spacing. The insert patterns, that is, the number of termini, their arrangements and spacing shall be as specified in appendix B. Every terminus position shall accept an optical terminus, dummy terminus or when specified, keyed optical terminus.

3.5.4.2 Terminus insertion and removal methods. Optical terminus insertion shall be accomplished by inserting the terminus, using a terminus insertion tool, into the rear of the connector insert. A means for locking the terminus in place shall be provided. Optical terminus removal shall be accomplished by inserting the terminus removal tool into the rear of the connector and by withdrawing the terminus out the rear of the connector. The individual termini shall be positively retained in the connector when installed with the terminus insertion tool and shall be capable of being removed without terminus or insert damage when using the terminus removal tool. Tools shall be as specified in MIL-STD-2042-5 or in MIL-STD-1678-6.

3.6 Backshells and backshell accessories.

3.6.1 Backshells. Backshells shall conform to the requirements as specified (see 3.1). The backshells shall be provided with cable strain relief as specified (see 3.1). The backshells shall be free of any sharp edges or other configurations that could cause damage to optical fibers extending through them.

3.6.2 Backshell accessories. Backshell accessories shall conform to the requirements as specified (see 3.1). The backshell accessories shall be provided without cable strain relief as specified (see 3.1). The backshell accessories shall be free of any sharp edges or other configurations that could cause damage to optical fibers extending through them.

3.7 Protective caps or covers. All optical connectors (plugs and receptacles) shall be provided with throwaway caps or covers on both ends. Each cap or cover shall be free of mold release, lubricants, or any other contaminants. Cap or cover materials shall be selected to minimize the outgassing of condensable volatile materials into the optical connector.

3.8 Dust covers. Dust covers shall conform to the requirements as specified (see 3.1). The dust covers shall be free of any sharp edges or any other configurations that could cause damage to the optical termini.

3.9 Tools. Tools used to terminate connectors onto cables shall be as specified (see 3.1).

3.10 Visual and mechanical.

3.10.1 Size. When examined in accordance with 4.9.2.1, the dimensions and dimensional tolerances for the connector parts shall be as specified (see 3.1).

3.10.2 Weight. When tested in accordance with 4.9.2.2, the weight of the connector parts shall be as specified (see 3.1).

3.10.3 Identification marking (see 4.9.2.3). Identification marking shall be as specified in 3.10.3.1. Markings shall be legible and permanent. Markings shall be legible to the extent that none are missing, in whole or in part, faded, blurred, smeared, or shifted (dislodged) and shall be readily readable. Marking methods used that penetrate to connector base metal (for plated connectors) shall be readable (and show no appreciable corrosion) after salt spray. Contrast between characters and surface shall be good. Markings shall be permanent to the extent of withstanding cleaning procedures and of withstanding environmental and mechanical performance tests conducted.

3.10.3.1 Connectors, alignment sleeve retainer (ASR), backshells and dust covers. Connectors, ASR, backshells and dust covers shall be identified with markings that are permanent, clearly visible, and legible. Identification marking shall include the PIN and either the manufacturer's CAGE code, name, or logo. Connectors shall also be marked with a yellow band in accordance with EIA-359, or the phrase "FIBER OPTICS" as specified (see 3.1). Connector receptacles shall also be marked with a red full-mate indicator in accordance with EIA-359 as specified in appendix A, figure A-2 herein.

3.10.3.2 Inserts and alignment sleeve retainer (ASR). Marking shall correspond between mating inserts and ASR and shall be as specified in Appendix B. Raised or depressed characters shall not be used on mating faces, not to exclude laser or ink marking. Terminus locations shall be designated by identifiable characters on the front and rear faces of the insert or the insert assembly. Character position and arrangement shall assure appropriate terminus cavity identification. The ASR shall be marked. Marking on the ASR shall be restricted to the circular surface (side) only.

3.10.3.3 JAN and J marking. The United States Government has adopted and is exercising legitimate control over the certification marks “JAN” and “J”, respectively, to indicate that items so marked or identified are manufactured to, and meet all the requirements of specifications. Accordingly, items acquired to, and meeting all of the criteria specified herein and in applicable specifications shall bear the certification mark “JAN” except that items too small to bear the certification mark “JAN” shall bear the letter “J”. The “JAN” or “J” shall be placed immediately before the part number except that if such location would place a hardship on the manufacturer in connection with such marking, the “JAN” or “J” may be located on the first line above or below the part number. Items furnished under contracts or orders which either permit or require deviation from the conditions or

requirements specified herein or in applicable specifications shall not bear “JAN” or "J". In the event an item fails to meet the requirements of this specification and the applicable specification sheets, the manufacturer shall remove completely the military part number and the “JAN” or the “J” from the sample tested and also from all items represented by the sample. The “JAN” or “J” certification mark shall not be used on products acquired to contractor drawings or specifications. The United States Government has obtained Certificate of Registration Number 504,860 for the certification mark “JAN” and Registration Number 2,577,735 for the certification mark “J”.”

3.10.4 Screw threads. When tested in accordance with 4.9.2.4, slight out-of-roundness beyond the tolerances specified is acceptable if the threads can be checked without forcing the thread gauges. Screw threads may be relieved provided the relief does not interfere with proper performance of the screw threads. Unless otherwise specified, English unit screw threads shall be 2A or 2B conforming to SAE-AS8879. Unless otherwise specified, metric unit screw threads shall conform to FED-STD-H28.

3.10.5 Maintainability. The connectors shall require no preventive maintenance.

3.10.6 Workmanship. All details of workmanship shall be as specified herein when examined in accordance with 4.9.2.4. Connector parts shall be dimensionally uniform and free of manufacturing flaws that would degrade performance, inhibit proper connection to interfacing elements, and otherwise yield an inferior product. The following shall be a minimal level of visual examination to be performed and is not intended to restrict other pertinent workmanship examinations:
Loose termini, inserts, or other connector parts which adversely affect the environmental sealing, or degrade optical termini alignment shall not be permitted. Peeling or chipping of plating or finish, galling of mating parts indicating excessive wear, nicks, burrs, or other substandard connector surface blemishes shall not be permitted.

3.11 Optical performance. The optical performance requirements of 3.11.1 through 3.11.5 shall be used to monitor effects of the inspection requirements specified in 3.12, 3.13, and 3.14 as required by 4.9 and 4.10.

3.11.1 Insertion loss. The initial insertion loss and the insertion loss verified at any time during testing for a mated pair of connectors shall be not greater than the values specified in table II for each of the mated measurements. The insertion loss shall be measured for 10 mates and demates except for shell size 23 which shall be measured for 5 mates and demates (see 4.9.3.1).

TABLE II. Insertion loss. 1/

Fiber size (um)	Temperature range 1		Temperature range 2	
	Initial insertion loss (dB)	Insertion loss verification (dB)	Initial insertion loss (dB)	Insertion loss verification (dB)
Single mode < 9/125	NA	NA	0.75	1.00
Single mode 9/125	0.50	0.75	0.50	0.75
50/125	0.50	0.75	0.75	1.00
62.5/125	0.50	0.75	0.50	0.75
62.5/125/155	NA	NA	0.75	1.00
100/140	0.50	0.75	0.50	0.75
100/140/172	NA	NA	0.75	1.00

1/ These maximum insertion loss values pertain when the MIL-PRF-64266 connector is used with MIL-PRF-29504/18 or MIL-PRF-29504/20 termini, the applicable MIL-PRF-49291 or other specified optical fiber and placed on the end of the optical fiber with the specified termination procedure.

3.11.2 Discontinuities. When measured in accordance with 4.9.3.2, no discontinuity shall occur. For multimode termini, a discontinuity is considered to be a reduction of optical transmittance of 0.5 dB or more for a duration of 50 microseconds or more. For single mode termini, a discontinuity is considered to be a reduction of optical transmittance of 0.5 dB or more for a duration of 50 microseconds or more during vibration or 10 milliseconds or more during shock.

3.11.3 Crosstalk. When connectors with 3 or more channels are tested in accordance with 4.9.3.3, the signal power levels, or sum of levels of the passive channels, shall be below the signal level of the active channel by at least 60 dB.

3.11.4 Change in optical transmittance. When tested in accordance with 4.9.3.4, the change in optical transmittance shall be less than 0.5 dB.

3.11.5 Return loss. When measured in accordance with 4.9.3.5, the return loss of a standard polish multimode or single mode optical terminus shall be not less than 30 dB. The return loss of an enhanced polish single mode optical terminus shall be not less than 40 dB. The return loss of an APC polish single mode optical terminus shall not be less than 60 dB.

3.12 Functional requirements.

3.12.1 Insert retention radial strength. When tested in accordance with 4.9.4.1, connector inserts shall withstand the clockwise and counterclockwise radial torque specified in table III for a minimum period of one minute. No rotational displacement shall be observed between the inserts and their shell body during or after the test exposure.

3.12.2 Insert retention axial strength. When tested in accordance with 4.9.4.2, connector inserts shall withstand an applied minimum pressure of 100 pounds per square inch (0.69 Mpa) in both the forward direction and the backward direction for a minimum period of 1 minute without cracking, breaking, or being dislocated from their normal positions in the connector shell. No axial displacement detrimental to performance shall be observed between the inserts and their shell body during or after the test exposure.

3.12.3 Terminus insertion and removal forces. Connectors shall be tested in accordance with 4.9.4.3. The terminus insertion force (force required to insert and lock the terminus into the retention clip) shall not exceed 5.0 pounds (22 N) and the terminus removal force (force required to remove or unlock the termini from the retention clip) shall not exceed 22.0 pounds (98 N).

TABLE III. Insert retention radial strength.

Connector shell size	Maximum radial torque (inch pounds (N-m))
11	15 (1.7)
13	20 (2.3)
15	25 (2.8)
23	37 (4.2)

3.12.4 Terminus retention force. When tested in accordance with 4.9.4.4 and subjected to axial loads of 22.0 pounds (98 N), termini shall be retained in their inserts and axial displacements of the termini shall not exceed .015 inch (0.38 mm).

3.12.5 Maintenance aging (see 4.9.4.5).

3.12.5.1 Termini. Connectors with removable termini shall be tested in accordance with 4.9.4.5.1. Connectors shall show no visible evidence of wear or deformation which may degrade their ability to perform as specified. The terminus insertion and removal forces (see 3.12.3) requirement of 22.0 pounds (98 N) shall be met.

3.12.5.2 Alignment sleeve retainer. Connectors with an alignment sleeve retainer shall be tested in accordance with 4.9.4.5.2. Connectors and the alignment sleeve retainer shall show no visible evidence of wear or deformation which may degrade their ability to perform as specified.

3.12.6 Connector coupling engagement and disengagement torque. When tested in accordance with 4.9.4.6, the maximum coupling ring and coupling screw engagement and disengagement torques shall be as specified in table IV.

TABLE IV. Connector coupling engagement and disengagement torques.

Connector shell size	Engagement and disengagement torque (inch-pounds (N-m))	
	Minimum	Maximum
11	2 (0.2)	15 (1.7)
13	2 (0.2)	20 (2.3)
15	3 (0.3)	25 (2.8)
23	7 (0.8)	37 (4.2)

3.12.7 Backshell and backshell accessory attachment. When tested in accordance with 4.9.4.7, the minimum backshell or backshell accessory disengagement torque shall be not less than the maximum coupling engagement/ disengagement torque specified in table V. No evidence of excessive thread binding, seal pinching, or any contamination buildup shall be observed.

TABLE V. Accessory thread strength.

Shell size	Accessory thread strength	
	Inch-pound	Newton-meters
11 13 15	55	6.2
23	105	11.9

3.12.7.1 Accessory thread strength. When tested as specified in 4.9.4.7, the accessory threads, the portion of the connector that accepts backshells or backshell accessories shall withstand the torque specified in table V.

3.13 Mechanical requirements.

3.13.1 Cable pull out force. When tested in accordance with 4.9.5.1, the minimum cable to connector pullout strength for connectors with specified backshells (see 3.1) shall be 162 pounds (720.3 N). There shall be no evidence of cable jacket damage, cable strain relief failure, cable to backshell seal damage, distortion or bending of metallic connector parts, or cable disengagement from the cable strain relief. The mated pair shall meet the requirements of 3.11.4 during and after the test.

3.13.2 External bending moment. When tested in accordance with 4.9.5.2, connectors and backshells shall exhibit no visible evidence of damage that may degrade their ability to perform as specified (see 3.1).

3.13.3 Cable seal flexing. When tested in accordance with 4.9.5.3, connector strain relief mechanisms shall prevent loss of environmental sealing or other damage which may impair the connector operation.

3.13.4 Twist. When tested in accordance with 4.9.5.4, connector seals shall not be rendered inoperable nor shall any other connector damage occur. The change in optical transmittance attributable to the mated pair shall be less than 0.5 dB during and after the test.

3.13.5 Mating durability. When tested in accordance with 4.9.5.5, mated pair shall show no evidence of mechanical defects detrimental to connector operation. The mated pair shall meet the requirements of 3.11.4 during and after the test.

3.13.6 Impact. When tested in accordance with 4.9.5.6, connectors shall not be visibly damaged or otherwise rendered unfit for operational use. The requirements of 3.11.4 shall be met after the test.

3.13.7 Crush. When tested in accordance with 4.9.5.7, mated pair shall show no evidence of inability to mate or unmate, broken parts, loss of optical continuity, or damage to shells, backshells, or dust covers. The requirements of 3.11.4 shall be met during and after the test.

3.14 Environmental requirements.

3.14.1 Temperature ranges. Terminated connectors shall meet all requirements specified (see 3.1), during the specified operating environments and after the specified storage environments. The operating temperature range and storage temperature range shall be in accordance with 1.3 and as specified (see 3.1). Unterminated connectors shall meet the requirements of the most extreme temperature range specified in table I (see 1.2.1b).

3.14.2 Thermal shock. When tested in accordance with 4.9.6.1, terminated connectors shall show no evidence of mechanical damage, loosening of component parts, separation of bonded surfaces, or other damage detrimental to the operation of the connector. Terminated connectors for temperature range 1 shall meet the requirements of 3.11.4 after the test. Terminated connectors for temperature range 2 shall meet the requirements of 3.11.4 after the test and shall not exceed 1.5 dB during the test.

3.14.3 Temperature/humidity cycling. When tested in accordance with 4.9.6.2, mated pair shall not swell or otherwise degrade such that connector performance is impaired. Mated pair shall meet the requirements of 3.11.4 during and after the test.

3.14.4 Temperature cycling. When tested in accordance with 4.9.6.3, a post test visual examination of the mated pair shall reveal no evidence of connector part dimensional change, no leakage of waterproofing compounds or other apparent loss of sealing capability, no surface or identification marking impairment, no coupling-thread binding or other evidence of mating or unmating incapability, and no other damage detrimental to the operation of the connector. Mated pair shall meet the requirements of 3.11.4 during and after the test.

3.14.5 Temperature life (Life aging). When tested in accordance with 4.9.6.4, mated pair subjected to the specified accelerated aging exposures, shall not exhibit visual evidence of dimensional change, opening of seals, cracking or crazing of components or finishes, identification marking impairment, fusion or seizure of mating parts, leakage of waterproofing compounds, or other effects detrimental to connector operation. Mated pair shall meet the requirements of 3.11.4 after the test. Connectors with dielectric inserts shall meet the insert retention radial strength (see 3.12.1) and insert retention axial strength (see 3.12.2) requirements after aging.

3.14.6 Freezing water immersion. When tested in accordance with 4.9.6.5, mated pair shall not be physically damaged. The mated pair shall meet the optical requirements specified in 3.11.4 during and after the test.

3.14.7 Sand and dust. When tested in accordance with 4.9.6.6, the mated pair shall show no evidence of physical damage which will adversely affect the operation of the connector. The change in optical transmittance requirements of 3.11.4 shall be met during and after the test, and coupling torques requirements of 3.12.6 shall be met after the test.

3.14.8 Terminus cleaning. After cleaning the terminus in accordance with 4.9.6.7, the marking requirements of 3.10.3 and the change in optical transmittance of 3.11.4 shall be met after the test.

3.14.9 Electromagnetic effects. When tested in accordance with 4.9.6.8 the propagated radio frequency (RF) attenuation of the connector shall be not less than the value specified in table VI for specified frequencies. The electromagnetic effects test is not applicable for connector class E.

TABLE VI. Electromagnetic effects.

Frequency band	Frequency (MHz)	Leakage attenuation (dB) minimum	
		Connector classes: A, B, C	Connector classes: D
VHF, UHF	100	90	65
	200	88	65
	300	88	65
	400	87	65
	800	85	65
	1000	85	65
Microwave	1500	76	65
	2000	70	65
	3000	69	65
	4000	68	65
	6000	66	65
	10,000	65	65

3.14.10 Fluid immersion. When tested in accordance with 4.9.6.9, visual examination of the connector and mated pair shall reveal no swelling or softening of material, no loss of sealing capability or identification marking, and no discoloration or other effects detrimental to the intended use of these connectors, such as corrosion, distortion, blistering, or delamination of plating as a result of fluid immersion.

3.14.11 Salt spray (corrosion, see 4.9.6.10).

3.14.11.1 Temperature range 1 only. When tested in accordance with 4.9.6.10.1, no visible evidence of salt penetration into the connector sealed area shall be observed. No corrosive effects shall be seen on the external connector parts that would be detrimental to the operation of the connector.

3.14.11.2 Temperature range 2 only. When tested in accordance with 4.9.6.10.2, no corrosive effects shall be seen on the internal connector or terminus parts, as applicable, which would be detrimental to the operation of the connector/terminus. No optical degradation shall occur as a result of this test. Optical degradation occurs if requirement for insertion loss verification is not met (see 3.11.1).

3.14.12 Flammability. When tested in accordance with 4.9.6.11, the mated pair shall meet the optical requirements of 3.11.4. The unmated connector assembly shall not exceed a combined flame and afterglow extinguishing time of 30 seconds after removal of the applied flame. There shall be no dripping that will cause the flammable material to ignite and there shall be no violent burning or explosive type fire.

3.14.13 Fungus resistance. When tested in accordance with 4.9.6.12, polymeric connector materials shall show sparse or very restricted microbial growth and reproduction with minor or inhibited substrate utilization. There shall be little or no chemical, physical, or structural change detectable.

3.14.14 Ozone exposure. When tested in accordance with 4.9.6.13, seals shall show no evidence of excessive swelling or embrittlement which may degrade environmental isolation.

3.14.15 Vibration. When tested in accordance with 4.9.6.14, mated pair shall not disengage nor exhibit loosening of the connector parts (including the coupling mechanism or backshell). Mated pair shall not be damaged, and there shall be no loosening of parts, no leakage of the index matching material, and no other damage which can produce physical distortion or wear and may result in fatigue of the mechanical parts. The requirements of 3.11.2 shall be met during the test and 3.11.4 shall be met after the test.

3.14.16 Shock. When tested in accordance with 4.9.6.15, mated pair shall not be damaged and there shall be no loosening of parts. The requirements of 3.11.2 shall be met during the test and 3.11.4 shall be met after the test.

3.14.17 Water pressure. When tested in accordance with 4.9.6.16, visual inspection of the test connector shall reveal no penetration of water into the sealed region of the mated pair. The requirements of 3.11.4 shall be met after the test.

3.14.18 Shell-to-shell conductivity. When tested as specified in 4.9.6.17, the probes shall not puncture or otherwise damage the connector finish. The maximum measured potential drop across assemblies shall be as follows:

a. Class A and C (see 1.2.1a for classes): 3.0 millivolts initial, 5.0 millivolts after conditioning (salt spray and coupling torque).

b. Class B: 10 millivolts initial, 20 millivolts after conditioning.

c. Class D and E: Not applicable.

3.14.19 Altitude immersion. When tested in accordance with 4.9.6.18, mated pair shall not be damaged and there shall be no evidence of moisture penetration into the connector interior. The requirements of 3.11.4 shall be met during and after the test.

3.14.20 Modified SO_2/salt spray (fog). When tested in accordance with 4.9.6.19, no visible evidence of modified SO_2/salt penetration into the mated pair sealed area shall be observed. No corrosive effects shall be seen on the external connector parts which would be detrimental to the operation of the connector (including mechanical mating). When specified for separate testing of the termini, the insertion loss verification requirement shall be met.

4. VERIFICATION

4.1 Classification of inspections. The inspections specified herein are classified as follows:

a. Qualification inspection (see 4.7).

b. Conformance inspection (see 4.8).

4.2 Inspection conditions. Unless otherwise specified, all inspections shall be performed in accordance with the test conditions specified in TIA/EIA-455 or as specified herein.

4.3 Verification program. A verification program shall be established and maintained in accordance with MIL-STD-790. Evidence of such compliance shall be verified by the qualifying activity of this specification as a prerequisite for qualification and continued qualification. The verification system procedures, planning, and all other documentation and data that comprise the verification system shall be available to the Government for review. The Government may perform any necessary inspections, verifications, and evaluations to ascertain conformance to the requirements and adequacy of the implementing procedures.

4.4 Assembly plants. Assembly plants shall be listed on, or approved for listing on, the applicable qualified products list. The assembly plant shall use only piece parts supplied by the qualified connector manufacturer. No testing other than visual examination is required of certified piece parts obtained from the qualified connector manufacturer, except when there is cause for rejection. All assemblies produced at the assembly plant shall be subjected to examination of the product to assure that the assembly process conforms with that established at the qualified manufacturing plant. Quality control requirements shall be the same as required for the qualified connector manufacturer.

4.5 Test equipment and inspection facilities. Provision for test and measuring equipment and inspection facilities of sufficient accuracy, quality, and quantity to permit performance of the required inspections shall be the responsibility of the contractor. The establishment and maintenance of a calibration system to control the accuracy of the measuring and test equipment shall be in accordance with NCSL-Z540.3.

4.6 Optical transmittance instrumentation stability. Optical transmittance instrumentation shall be subjected to the following stability tests before qualification testing is performed. The first test shall consist of measuring the transmitted power through each channel once every minute for a four-hour period. The second test shall consist of measuring the transmitted power through each channel once every 30 minutes for a 96 hour period. The data for each channel shall be analyzed to determine average transmittance, minimum and maximum transmittance, the standard deviation of the transmittance, and the minimum and maximum percent deviation of the transmittance.

4.7 Qualification inspection. Qualification inspection shall be performed at a laboratory acceptable to the Government (see 6.3) on sample units produced with equipment and procedures normally used in production. For circular connectors, this inspection shall consist of performing the inspections and optical tests specified in table VII and table VIII, in the sequence shown therein, on the qualification test samples specified in 4.7.1. Allowance for reductions in this test sequence for connector initial qualification for circular connectors is addressed in table VII and table VIII. Test sequences are addressed separately for connector accessories (see 3.1) when these components are not qualified along with a connector. Table VII and table VIII covers the procedure for initial connector qualification with allowance for reduced testing for other shell sizes once a shell size 23 completes the full qualification sequence. This limited testing can be done in parallel with the full test sequence for shell size 23; however, the vendor assumes the risk if shell size 23 fails, then the other shell sizes undergoing the limited qualification fails also. The extent of reduction in qualification is dependent on shell sizes, temperature range and fiber sizes and shall be limited to those reductions. Qualification inspection for rectangular connectors is addressed in the individual specification sheet.

4.7.1 Test samples. Fiber optic connector parts complying with the specified requirements (see 3.1) shall be submitted for qualification. The parts submitted for qualification shall be selected from units produced on typical manufacturing lines. The manufacturer shall provide a counterpart connector for each connector subjected to qualifying tests requiring mating assemblies (mated pair). The counterpart connectors provided for this purpose shall be new, previously qualified connectors, or new connectors submitted for qualification testing. For those tests specifying the use of mated pair, optical and mechanical test assessments shall be made using the assigned counterpart connector for those test measurements as required.

4.7.1.1 Sample size. For plug/receptacle qualification, the quantity of mated pairs specified that shall be submitted for qualification testing for each fiber size, temperature range, and shell size to be tested (not including the additional test samples required for interoperability) are specified in table VII and table VIII for circular connectors and in the specification sheet (see 3.1) for rectangular connectors. Table VII is comprised for temperature range 1 and table VIII for temperature range 2. Unless otherwise specified for circular connectors (see table VII and 3.1), these samples shall consist of MIL-PRF-64266/1 wall (panel) mounted receptacles with MIL-PRF-64266 straight backshells and MIL-PRF-64266/2 plugs with MIL-PRF-64266 straight backshells. For temperature range 1, MIL-PRF-64266/18 backshells shall be used. For temperature range 2, either solid backshells per MIL-PRF-64266/12 through /16 or split backshells per MIL-PRF-64266/19 through MIL-PRF-64266/21 shall be used. Dust covers that conform to MIL-PRF- 64266/10 shall be provided with plugs for circular connectors. Dust covers that conform to MIL-PRF-64266/11 shall be provided with receptacles for circular connectors. For backshell qualification, the specified number of mated pairs shall be submitted (see 3.1), consisting of MIL-PRF-64266/1 wall (panel) mounted receptacles and MIL-PRF-64266/2 plugs, both with the backshell undergoing qualification. For the most comprehensive, most cost effective qualification, the backshell configurations specified in table VII and table VIII may be used instead of one specification sheet straight backshell selected for each temperature range.

TABLE VII. Qualification inspection for circular connectors, temperature range 1

Qualification type 3/, 23/, 25/, 27/, 28/	Full	Reduced	Reduced	Reduced	Reduced	Reduced	Reduced	Reduced
Shell size 23/	23	15	13	11	23	15	13	11
# of connector insert cavities, mp 1	36	8	4	4	36	8	4	4
# of connector insert cavities, mp 2	36	8	4	4	36	8	4	4
Fiber size (microns)	SM	SM	SM	SM	MM	MM	MM	MM
Backshell cable entry angle, mp 1 22/	Straight	Straight	Straight	Straight	45 Degree	45 Degree	45 Degree	45 Degree
Backshell cable entry angle, mp 2 22/	Straight	Straight	Straight	Straight	90 Degree	90 Degree	90 Degree	90 Degree
Backshell rear adapter platform, mp 1, 22/	Banding	Banding	Banding	Banding	Banding	Banding	Banding	Banding
Backshell rear adapter platform, mp 2, 22/	Compress	Compress	Compress	Compress	Compress	Compress	Compress	Compress
Minimum number of mated pair **3/**	**6**	**2**	**2**	**2**	**2**	**2**	**2**	**2**
TEST PERFORMED 1/, 2/, 19/, 24/								
Group 1 (4 mated pairs) 3/								
Interoperability 4/, 5/, 6/, 27/	X	X	X	X	X	X	X	X
Visual & Mechanical								
Size 27/	X	X	X	X	X	X	X	X
Weight 27/	X	X	X	X	X	X	X	X
Identification Marking 27/	X	X	X	X	X	X	X	X
Workmanship 27/	X	X	X	X	X	X	X	X
Screw thread 27/	X	X	X	X	X	X	X	X
Functional (Group 2 parts only)								
Insert retention radial strength 27/	X	X	X	X	7/	7/	7/	7/
Insert retention axial strength 27/	X	X	X	X				
Terminus insert & removal forces	X							
Terminus retention force	X							
Maintenance aging	X							
Shell to shell conductivity	X							
Connector coupling engagement & disengagement torque 27/	X	X	X	X				
Backshell & backshell accessory attachment 27/	X	X	X	X				
Banding strap attachment integrity 21/, 27/	X	X	X	X				
Compression fitting engagement integrity 21/, 27/	X	X	X	X				
Backshell mating durability 27/	X	X	X	X				
Backshell-to-connector mating torque 27/	X	X	X	X				
Optical								
Insertion loss (initial) 27/	X	X	X	X	X	X	X	X
Return loss (SM only) 27/	X	X	X	X	17/	17/	17/	17/
Crosstalk	X							

See notes at end of table.

TABLE VII. Qualification inspection for circular connectors, temperature range 1 – Continued.

Qualification type 3/, 23/, 25/, 27/, 28/	Full	Reduced	Reduced	Reduced	Reduced	Reduced	Reduced	Reduced
Shell size 23/	23	15	13	11	23	15	13	11
# of connector insert cavities, mp 1	36	8	4	4	36	8	4	4
# of connector insert cavities, mp 2	36	8	4	4	36	8	4	4
Fiber size (microns)	SM	SM	SM	SM	MM	MM	MM	MM
Backshell cable entry angle, mp 1 22/	Straight	Straight	Straight	Straight	45 Degree	45 Degree	45 Degree	45 Degree
Backshell cable entry angle, mp 2 22/	Straight	Straight	Straight	Straight	90 Degree	90 Degree	90 Degree	90 Degree
Backshell rear adapter platform, mp 1, 22/	Banding	Banding	Banding	Banding	Banding	Banding	Banding	Banding
Backshell rear adapter platform, mp 2, 22/	Compress	Compress	Compress	Compress	Compress	Compress	Compress	Compress
Minimum number of mated pair 3/	6	2	2	2	2	2	2	2
TEST PERFORMED 1/, 2/, 19/, 24/								
Group 2 (2 mated pairs)								
Cable pull out force (retention) 27/	X	X	X	X				
External bending moment 27/	X	X	X	X				
Cable seal flexing	X							
Twist	X				X	X	X	
Mating durability 18/, 27/	X							
Return loss (SM only) 27/	X							
Impact 27/	X							
Crush 27/	X							
Vibration								
Swept sine (TR1) 27/	X	X	X	X	X 20/			
Swept sine (TR2)								
Random at temperature (TR2 only)								
Random at ambient (TR1) 27/	X	X	X	X				
Random at ambient (TR 2)								
Return loss	X	X	X	X				
Shock								
MIL-S-901 (TR1 & TR2) 13/, 27/	X	X	X	X	X	X	X	X
Half-sine pulse (TR2 only)								
Insertion loss (verification)	X							
Water pressure 27/	X				X			
Modified SO_2/salt spray	X							

See notes at end of table.

TABLE VII. Qualification inspection for circular connectors, temperature range 1 – Continued.

Qualification type 3/, 23/, 25/, 27/, 28/	Full	Reduced	Reduced	Reduced	Reduced	Reduced	Reduced	Reduced
Shell size 23/	23	15	13	11	23	15	13	11
# of connector insert cavities, mp #1	18	8	4	4	36	8	4	4
# of connector insert cavities, mp #2	36	8	4	4	36	8	4	4
Fiber size (microns)	SM	SM	SM	SM	MM	MM	MM	MM
Backshell cable entry angle, mp #1 22/	Straight	Straight	Straight	Straight	45 Degree	45 Degree	45 Degree	45 Degree
Backshell cable entry angle, mp #2 22/	Straight	Straight	Straight	Straight	90 Degree	90 Degree	90 Degree	90 Degree
Backshell rear adapter platform, mp #1 22/	Banding	Banding	Banding	Banding	Banding	Banding	Banding	Banding
Backshell rear adapter platform, mp #2 22/	Compress	Compress	Compress	Compress	Compress	Compress	Compress	Compress
Minimum number of Mated pair 3/	6	2	2	2	2	2	2	2
TEST PERFORMED 1/, 2/, 19/, 24/								
Group 3 (2 mated pairs)								
Thermal shock (TR1)	X							
Thermal shock (TR2) 27/								
Temperature/humidity cycling	X							
Temperature cycling (TR1)	X							X 26/
Temperature cycling (TR2)								
Altitude immersion	X							
Life aging (Temperature life) (TR1) 12/	X							
Life aging (Temp life) (TR2) 12/, 16/								
Insert retention radial str 14/	X							
Insert retention axial str 14/	X							
Freezing water	X							
Insertion loss (verification)	X							
Return loss	X							
Sand & dust	X							
Connector coupling engagement & disengagement torque	X							
Terminus cleaning								
Identification marking	X							

See notes at end of table.

TABLE VII. Qualification inspection for circular connectors, temperature range 1 – Continued.

Qualification type 3/, 23/, 25/, 27/, 28/	Full	Reduced	Reduced	Reduced	Reduced	Reduced	Reduced	Reduced
Shell size 23/	23	15	13	11	23	15	13	11
# of connector insert cavities, mp #1	36	8	4	4	36	8	4	4
# of connector insert cavities, mp #2	36	8	4	4	36	8	4	4
Fiber size (microns)	SM	SM	SM	SM	MM	MM	MM	MM
Backshell cable entry angle, mp #1 22/	Straight	Straight	Straight	Straight	45 Degree	45 Degree	45 Degree	45 Degree
Backshell cable entry angle, mp #2 22/	Straight	Straight	Straight	Straight	90 Degree	90 Degree	90 Degree	90 Degree
Backshell rear adapter platform, mp #1 22/	Banding	Banding	Banding	Banding	Banding	Banding	Banding	Banding
Backshell rear adapter platform, mp #2 22/	Compress	Compress	Compress	Compress	Compress	Compress	Compress	Compress
Minimum number of Mated pair 3/	6	2	2	2	2	2	2	2
TEST PERFORMED 1/, 2/, 19/, 24/								
Group 4 (2 mated pairs + parts) 3/								
Electromagnetic effects (2mp) 8/, 27/	X	X	X	X	X	X	X	X
Fluid immersion (2 mated pair)	X							
Salt spray (2 mated pair) 10/, 15/	X							
Connector coupling engagement & disengagement torque	X							
Shell to shell conductivity	X							
Flammability (1 mated pair) 11/	X							
Fungus resistance (parts) 9/	X							
Ozone exposure (parts) 9/	X							

See notes at end of table.

TABLE VII. Qualification inspection for circular connectors, temperature range 1 – Continued.

1/ Qualification consists of performing tests in this table for both temperature range 1 (TR1) and temperature range 2 (TR2). For each shell size, recommended sequence is to perform shell size 23 first (or simultaneously). Then the other shell sizes can be obtained with performing only the tests listed. Otherwise, the entire test sequence listed for shell size 23 must be performed.
2/ "X" indicates test applies for particular part(s).
3/ Full qualification, need full number of mated pair and full sequence of tests: Group 1 mated pair are to be used for Groups 2 and 3 tests. Group 4 can be done before Group 1 with separate samples.
Reduced qualification, may use a reduced number of mated pair and have a limited sequence of tests: A minimum of two mated pair are required for Group 1. Group 1 mated pair may be used for limited number of Group 2, 3 and 4 tests also. Any additional mated pair, if prepared, for the limited qualification (such as only to be for Group 4 tests) must be inspected for Group 1 also.
4/ Interoperability test samples. Separate samples are required for interoperability testing. Connector interoperability samples are to be fully populated with termini on single fiber cable and configured without backshells. Backshell interoperability samples are to be constructed with terminated cables that fully populate the connector of the shell size under test. See Requirement 4103 of MIL-STD-1678-4 for test sample configuration.
5/ Interoperability test source. This testing will be performed by DLA Land and Maritime - TEB which maintains/retains the interoperability standards. Please note that separate test samples are required for interoperability testing. These test samples will then be retained by DLA Land and Maritime as interoperability standards.
6/ Interoperability fiber types. Interoperability is performed on both single mode and multimode for each shell size.
7/ Configuration requiring testing. To be performed for connectors with multiple piece inserts only.
8/ Electromagnetic effects. Specific test practices for this test, including clarifications and further details, are found in measurement 3308 of MIL-STD-1678-3. Use of a conductive gasket for EMI testing is permitted.
9/ Parts required. Polymeric parts from 1 mated pair.
10/ Two options for salt spray: a. Use same two mated pair from the fluid immersion test. b. Use separate mate pair (If option b, can use one cable of sufficient length to loop around to the cable entrance of each backshell).
11/ Options for flammability. Two mated pair from the fluid immersion, salt spray, or Group 2/3 samples after that Group's test completion may be used.
12/ Post temperature life test. For non-metallic inserts, perform insert retention axial strength and insert retention radial strength after conclusion of the temperature life test.
13/ Shock test. Standard shock fixture 4A for bulkhead mounting shall be used. Supplement test fixture that shall be used and the mounting shall be performed as specified in Measurement 3202 of MIL-STD-1678-2.
14/ Tests to be performed following Life aging (Temperature life) .
15/ Salt spray (4.9.6.10.1). Perform salt spray test for this connector in a mated configuration.
Salt spray (4.9.6.10.2, TR2). Perform salt spray test for this connector in an un-mated configuration only.
16/ Temperature life (TR2). Perform for connector only if there are not the same materials (including insert) and/or manufacturing process.
17/ Multimode return loss data. Multimode return loss data shall be obtained using the test setup and procedures per measurement 2105 of MIL-STD-1678-2 for MIL-PRF-29504/20 termini with a domed end face and APC polish. Multimode return loss data is requested, but not required, for other termini end face polishes and for other specification sheets (MIL-PRF-29504/18).
18/ Return loss after mating durability. If failure occurs, ferrule end faces may be re-polished and test redone.
19/ Optical measurements. Optical measurements are to be obtained as specified using the test setup and procedures in MIL-STD-1678-2.
20/ If test samples are fabricated using a qualified backshell then this test is not performed.
21/ For the mated pair under test, perform either the banding strap attachment integrity or the compression fitting engagement integrity, whichever is applicable. For temperature range 2, this test is applicable only for configurations with a banding platform on the rear adapter.

TABLE VII. Qualification inspection for circular connectors, temperature range 1 – Continued.

22/ a. Temperature range 1: Table prepared under assumption that the MIL-PRF-64266/18 backshell is being qualified with the connector. One of each two mated pair (mp) is fabricated with backshells containing difference rear adapter platforms (banding or compression) and the listed cable entry angle (straight, 45 degrees, or 90 degrees). Perform either Banding strap attachment integrity or Compression fitting engagement integrity, depending on type of strain relief attachment (i.e., banding strap or compression fitting) provided on the backshell. If only one type of strain relief attachment is being offered, both mated pair shall have that one type of strain relief attachment on the rear adapter platform.

b. Temperature range 2: Table prepared under assumption that the MIL-PRF-64266/12, /13 and /14 backshell specification sheets are being qualified with the connector. Alternately, this table may be used if the MIL-PRF-64266/19, /20 and /21 backshell configurations are being qualified with the connector. One of each two mated pair (mp) is fabricated with backshells containing difference rear adapter platforms (banding or convoluted tubing) and the listed cable entry angle (straight, 45 degrees, or 90 degrees).

c. Temperature range 2 backshells with convoluted tubing: Backshells with a convoluted tubing platform on the rear adapter that is fabricated with single mode fiber shall contain the retainer and backshell capture mechanism for convoluted tubing made from FEP. Backshells with a convoluted tubing platform on the rear adapter that is fabricated with multimode fiber shall contain the retainer and backshell capture mechanism for convoluted tubing made from PEEK.

23/ The reduced qualification in the table is valid if shell size 23 is being qualified. Otherwise, use the full qualification table for the largest shell size being qualified and the reduced qualification for any smaller shell sizes being qualified.

24/ If termini are being tested in addition to the connector and connector accessories, the terminus tests specified in the applicable
MIL-PRF-29504 specifications sheet for “Tests for unterminated termini” and tests specified for “Tests for termini as part of a single fiber cable” shall be performed also.

25/ This qualification is a combined qualification and is one in which multiple components (connectors, connector accessories and perhaps termini) are being qualified as part of the mated pair fabricated from those components.

26/ Use the same mated pair that underwent Group 2 inspections.

27/ If a shell size other than shell size 23 is qualified first, then the inspections that are identified under note “27/” in the table shall be performed for any larger shell sizes with single mode fiber.

28/ For qualification with a more limited set of backshells, refer to 4.7.1.1of MIL-PRF-64266.

TABLE VIII. Qualification inspection for circular connectors, temperature range 2.

Qualification type 3/, 23/, 25/, 27/, 28/	Full	Reduced	Reduced	Reduced	Reduced	Reduced	Reduced	Reduced
Shell size 23/	23	15	13	11	23	15	13	11
# of connector insert cavities, mp #1	18	10	6	2	18	10	6	2
# of connector insert cavities, mp #2	36	10	6	2	36	10	6	2
Fiber size (microns)	SM	SM	SM	SM	MM	MM	MM	MM
Backshell cable entry angle, mp #1 22/	Straight	Straight	Straight	Straight	45 Degree	45 Degree	45 Degree	45 Degree
Backshell cable entry angle, mp #2 22/	Straight	Straight	Straight	Straight	90 Degree	90 Degree	90 Degree	90 Degree
Backshell rear adapter platform, mp #1 22/	Banding	Banding	Banding	Banding	Banding	Banding	Banding	Banding
Backshell rear adapter platform, mp #2 22/	Con Tube	Con Tube	Con Tube	Con Tube	Con Tube	Con Tube	Con Tube	Con Tube
Minimum number of mated pair 3/	6	2	2	2	2	2	2	2
Test performed 1/, 2/, 19/, 24/								
Group 1 (4 mated pairs) 3/								
Interoperability 4/, 5/, 6/, 27/	X	X	X	X	X	X	X	X
Visual & Mechanical (parts only)								
Size 27/	X	X	X	X	X	X	X	X
Weight 27/	X	X	X	X	X	X	X	X
Identification Marking 27/	X	X	X	X	X	X	X	X
Workmanship 27/	X	X	X	X	X	X	X	X
Screw thread 27/	X	X	X	X	X	X	X	X
Functional (Group 2 parts only)								
Insert retention radial strength 7/, 27/								
Insert retention axial strength 27/								
Terminus insert & removal forces								
Terminus retention force								
Maintenance aging								
Shell to shell conductivity	X							
Connector coupling engagement & disengagement torque 27/	X	X	X	X				
Backshell & backshell accessory attachment 27/	X	X	X	X				
Banding strap attachment integrity 21/, 27	X	X	X	X				
Compression fitting engagement integrity 21/								
Backshell mating durability 27/	X	X	X	X				
Backshell-to-connector mating torque 27/	X	X	X	X				
Optical (4 mated pair)								
Insertion loss (initial) 27/	X	X	X	X	X	X	X	X
Return loss (SM only) 27/	X	X	X	X	17/	17/	17/	17/
Crosstalk								

See notes at end of table.

TABLE VIII. Qualification inspection for circular connectors, temperature range 2 – Continued.

Qualification type 3/, 23/, 25/, 27/, 28/	Full	Reduced	Reduced	Reduced	Reduced	Reduced	Reduced	Reduced
Shell size 23/	23	15	13	11	23	15	13	11
# of connector insert cavities, mp #1	18	10	6	2	18	10	6	2
# of connector insert cavities, mp #2	36	10	6	2	36	10	6	2
Fiber size (microns)	SM	SM	SM	SM	MM	MM	MM	MM
Backshell cable entry angle, mp #1 22/	Straight	Straight	Straight	Straight	45 Degree	45 Degree	45 Degree	45 Degree
Backshell cable entry angle, mp #2 22/	Straight	Straight	Straight	Straight	90 Degree	90 Degree	90 Degree	90 Degree
Backshell rear adapter platform, mp #1 22/	Banding	Banding	Banding	Banding	Banding	Banding	Banding	Banding
Backshell rear adapter platform, mp #2 22/	Con Tube	Con Tube	Con Tube	Con Tube	Con Tube	Con Tube	Con Tube	Con Tube
Minimum number of Mated pair 3/	6	2	2	2	2	2	2	2
TEST PERFORMED 1/, 2/, 19/, 24/								
Group 1 (4 mated pairs) 3/								
Interoperability 4/, 5/, 6/, 27/	X	X	X	X	X	X	X	X
Visual & Mechanical (parts only)								
Size 27/	X	X	X	X	X	X	X	X
Weight 27/	X	X	X	X	X	X	X	X
Identification Marking 27/	X	X	X	X	X	X	X	X
Workmanship 27/	X	X	X	X	X	X	X	X
Screw thread 27/	X	X	X	X	X	X	X	X
Functional (Group 2 parts only)								
Insert retention radial strength 7/, 27/								
Insert retention axial strength 27/								
Terminus insert & removal forces								
Terminus retention force								
Maintenance aging								
Shell to shell conductivity	X							
Connector coupling engagement & disengagement torque 27/	X	X	X	X				
Backshell & backshell accessory attachment 27/	X	X	X	X				
Banding strap attachment integrity 21/, 27	X	X	X	X				
Compression fitting engagement integrity 21/								
Backshell mating durability 27/	X	X	X	X				
Backshell-to-connector mating torque 27/	X	X	X	X				
Optical (4 mated pair)								
Insertion loss (initial) 27/	X	X	X	X	X	X	X	X
Return loss (SM only) 27/	X	X	X	X	17/	17/	17/	17/
Crosstalk								

See notes at end of table.

TABLE VIII. Qualification inspection for circular connectors, temperature range 2 – Continued.

Qualification type 3/, 23/, 25/, 27/, 28/	Full	Reduced	Reduced	Reduced	Reduced	Reduced	Reduced	Reduced
Shell size 23/	23	15	13	11	23	15	13	11
# of connector insert cavities, mp #1	18	10	6	2	18	10	6	2
# of connector insert cavities, mp #2	36	10	6	2	36	10	6	2
Fiber size (microns)	SM	SM	SM	SM	MM	MM	MM	MM
Backshell cable entry angle, mp #1 22/	Straight	Straight	Straight	Straight	45 Degree	45 Degree	45 Degree	45 Degree
Backshell cable entry angle, mp #2 22/	Straight	Straight	Straight	Straight	90 Degree	90 Degree	90 Degree	90 Degree
Backshell rear adapter platform, mp #1 22/	Banding	Banding	Banding	Banding	Banding	Banding	Banding	Banding
Backshell rear adapter platform, mp #2 22/	Con Tube	Con Tube	Con Tube	Con Tube	Con Tube	Con Tube	Con Tube	Con Tube
Minimum number of Mated pair 3/	6	2	2	2	2	2	2	2
TEST PERFORMED 1/, 2/, 19/, 24/								
Group 2 (2 mated pairs)								
Cable pull out force (retention)								
External bending moment 27/	X	X	X	X				
Cable seal flexing	X							
Twist	X	X	X	X	X	X	X	X
Mating durability 18/, 27/								
Return loss (SM only) 27/								
Impact 27/	X							
Crush 27/	X							
Vibration								
Swept sine (TR1)								
Swept sine (TR2) 27/	X	X	X	X	X	X	X	X
Random at temperature (TR2 only) 27/	X	X	X	X	X 20/			
Random at ambient (TR1)								
Random at ambient (TR2) 27/	X	X	X	X	X 20/			
Return loss 27/	X	X	X	X				
Shock								
MIL-S-901 (TR1 & TR2) 13/, 27/	X	X	X	X	X	X	X	X
Half-sine pulse (TR2 only) 27/	X	X	X	X				
Insertion loss (verification) 27/	X	X	X	X				
Water pressure								
Modified SO_2/salt spray	X							

See notes at the end of table.

TABLE VIII. Qualification inspection for circular connectors, temperature range 2 – Continued.

Qualification type 3/, 23/, 25/, 27/, 28/	Full	Reduced	Reduced	Reduced	Reduced	Reduced	Reduced	Reduced
Shell size 23/	23	15	13	11	23	15	13	11
# of connector insert cavities, mp #1	18	10	6	2	18	10	6	2
# of connector insert cavities, mp #2	36	10	6	2	36	10	6	2
Fiber size (microns)	SM	SM	SM	SM	MM	MM	MM	MM
Backshell cable entry angle, mp #1 22/	Straight	Straight	Straight	Straight	45 Degree	45 Degree	45 Degree	45 Degree
Backshell cable entry angle, mp #2 22/	Straight	Straight	Straight	Straight	90 Degree	90 Degree	90 Degree	90 Degree
Backshell rear adapter platform, mp #1 22/	Banding	Banding	Banding	Banding	Banding	Banding	Banding	Banding
Backshell rear adapter platform, mp #2 22/	Con Tube	Con Tube	Con Tube	Con Tube	Con Tube	Con Tube	Con Tube	Con Tube
Minimum number of Mated pair 3/	6	2	2	2	2	2	2	2
TEST PERFORMED 1/, 2/, 19/, 24/								
Group 3 (2 mated pairs)								
Thermal shock (TR1)								
Thermal shock (TR2) 27/	X							X 26/
Temperature/humidity cycling	X							
Temperature cycling (TR1)								
Temperature cycling (TR2)	X							
Altitude immersion	X							
Life aging (Temperature life) (TR1) 12/								
Life aging (Temp life) (TR2) 12/, 16/	X							
Insert retention radial str 14/	X							
Insert retention axial str 14/	X							
Freezing water	X							
Insertion loss (verification)	X							
Return loss	X							
Sand & dust	X							
Connector coupling engagement & disengagement torque	X							
Terminus cleaning								
Identification marking	X							

See notes at end of table.

TABLE VIII. Qualification inspection for circular connectors, temperature range 2 – Continued.

Qualification type 3/, 23/, 25/, 27/, 28/	Full	Reduced	Reduced	Reduced	Reduced	Reduced	Reduced	Reduced
Shell size 23/	23	15	13	11	23	15	13	11
# of connector insert cavities, mp #1	18	10	6	2	18	10	6	2
# of connector insert cavities, mp #2	36	10	6	2	36	10	6	2
Fiber size (microns)	SM	SM	SM	SM	MM	MM	MM	MM
Backshell cable entry angle, mp #1 22/	Straight	Straight	Straight	Straight	45 Degree	45 Degree	45 Degree	45 Degree
Backshell cable entry angle, mp #2 22/	Straight	Straight	Straight	Straight	90 Degree	90 Degree	90 Degree	90 Degree
Backshell rear adapter platform, mp #1 22/	Banding	Banding	Banding	Banding	Banding	Banding	Banding	Banding
Backshell rear adapter platform, mp #2 22/	Con Tube	Con Tube	Con Tube	Con Tube	Con Tube	Con Tube	Con Tube	Con Tube
Minimum number of mated pair 3/	6	2	2	2	2	2	2	2
Test performed 1/, 2/, 19/, 24/								
Group 4 (2 mated pairs + parts) 3/								
Electromagnetic effects (2mp) 8/, 27/	X	X	X	X	X	X	X	X
Fluid immersion (2 mated pair)	X							
Salt spray (2 mated pair) 10/, 15/	X							
Connector coupling engagement & disengagement torque	X							
Shell to shell conductivity	X							
Flammability (1 mated pair) 11/	X							
Fungus resistance (parts) 9/	X							
Ozone exposure (parts) 9/	X							

See notes at end of table.

TABLE VIII. Qualification inspection for circular connectors, temperature range 2 – Continued.

1/ Qualification consists of performing tests in this table for both temperature range 1 (TR1) and temperature range 2 (TR2). For each shell size, recommended sequence is to perform shell size 23 first (or simultaneously). Then the other shell sizes can be obtained with performing only the tests listed. Otherwise, the entire test sequence listed for shell size 23 must be performed.
2/ "X" indicates test applies for particular part(s).
3/ Full qualification, need full number of mated pair and full sequence of tests: Group 1 mated pair are to be used for Groups 2 and 3 tests. Group 4 can be done before Group 1 with separate samples.
Reduced qualification, may use a reduced number of mated pair and have a limited sequence of tests: A minimum of two mated pair are required for Group 1. Group 1 mated pair may be used for limited number of Group 2, 3 and 4 tests also. Any additional mated pair, if prepared, for the limited qualification (such as only to be for Group 4 tests) must be inspected for Group 1 also.
4/ Interoperability test samples. Separate samples are required for interoperability testing. Connector interoperability samples are to be fully populated with termini on single fiber cable and configured without backshells. Backshell interoperability samples are to be constructed with terminated cables that fully populate the connector of the shell size under test. See Requirement 4103 of MIL-STD-1678-4 for test sample configuration.
5/ Interoperability test source. This testing will be performed by DLA Land and Maritime - TEB which maintains/retains the interoperability standards. Please note that separate test samples are required for interoperability testing. These test samples will then be retained by DLA Land and Maritime as interoperability standards.
6/ Interoperability fiber types. Interoperability is performed on both single mode and multimode for each shell size. 7/ Configuration requiring testing. To be performed for connectors with multiple piece inserts only.
8/ Electromagnetic effects. Specific test practices for this test, including clarifications and further details, are found in measurement 3308 of MIL-STD-1678-3. Use of a conductive gasket for EMI testing is permitted.
9/ Parts required. Polymeric parts from 1 mated pair.
10/ Two options for salt spray: a. Use same two mated pair from the fluid immersion test. b. Use separate mate pair (If option b, can use one cable of sufficient length to loop around to the cable entrance of each backshell).
11/ Options for flammability. Two mated pair from the fluid immersion, salt spray, or Group 2/3 samples after that Group's test completion may be used.
12/ Post temperature life test. For non-metallic inserts, perform insert retention axial strength and insert retention radial strength after conclusion of the temperature life test.
13/ Shock test. Standard shock fixture 4A for bulkhead mounting shall be used. Supplement test fixture that shall be used and the mounting shall be performed as specified in Measurement 3202 of MIL-STD-1678-2.
14/ Tests to be performed following Life aging (Temperature life) .
15/ Salt spray (4.9.6.10.1). Perform salt spray test for this connector in a mated configuration.
Salt spray (4.9.6.10.2, TR2). Perform salt spray test for this connector in an un-mated configuration only.
16/ Temperature life (TR2). Perform for connector only if there are not the same materials (including insert) and/or manufacturing process.
17/ Multimode return loss data. Multimode return loss data shall be obtained using the test setup and procedures per measurement 2105 of MIL-STD-1678-2 for MIL-PRF-29504/20 termini with a domed end face and APC polish. Multimode return loss data is requested, but not required, for other termini end face polishes and for other specification sheets (MIL-PRF-29504/18).
18/ Return loss after mating durability. If failure occurs, ferrule end faces may be re-polished and test redone.
19/ Optical measurements. Optical measurements are to be obtained as specified using the test setup and procedures in MIL-STD- 1678-2.
20/ If test samples are fabricated using a qualified backshell then this test is not performed.
21/ For the mated pair under test, perform either the banding strap attachment integrity or the compression fitting engagement integrity, whichever is applicable. For temperature range 2, this test is applicable only for configurations with a banding platform on the rear adapter.

TABLE VIII. Qualification inspection for circular connectors, temperature range 2 – Continued.

22/ a. Temperature range 1: Table prepared under assumption that the MIL-PRF-64266/18 backshell is being qualified with the connector. One of each two mated pair (mp) is fabricated with backshells containing difference rear adapter platforms (banding or compression) and the listed cable entry angle (straight, 45 degrees, or 90 degrees). Perform either Banding strap attachment integrity or Compression fitting engagement integrity, depending on type of strain relief attachment (i.e., banding strap or compression fitting) provided on the backshell. If only one type of strain relief attachment is being offered, both mated pair shall have that one type of strain relief attachment on the rear adapter platform.
b. Temperature range 2: Table prepared under assumption that the MIL-PRF-64266/12, /13 and /14 backshell specification sheets are being qualified with the connector. Alternately, this table may be used if the MIL-PRF-64266/19, /20 and /21 backshell configurations are being qualified with the connector. One of each two mated pair (mp) is fabricated with backshells containing difference rear adapter platforms (banding or convoluted tubing) and the listed cable entry angle (straight, 45 degrees, or 90 degrees).
c. Temperature range 2 backshells with convoluted tubing: Backshells with a convoluted tubing platform on the rear adapter that is fabricated with single mode fiber shall contain the retainer and backshell capture mechanism for convoluted tubing made from FEP. Backshells with a convoluted tubing platform on the rear adapter that is fabricated with multimode fiber shall contain the retainer and backshell capture mechanism for convoluted tubing made from PEEK.
23/ The reduced qualification in the table is valid if shell size 23 is being qualified. Otherwise, use the full qualification table for the largest shell size being qualified and the reduced qualification for any smaller shell sizes being qualified.
24/ If termini are being tested in addition to the connector and connector accessories, the terminus tests specified in the applicable MIL-PRF-29504 specifications sheet for “Tests for unterminated termini” and tests specified for “Tests for termini as part of a single fiber cable” shall be performed also.
25/ This qualification is a combined qualification and is one in which multiple components (connectors, connector accessories and perhaps termini) are being qualified as part of the mated pair fabricated from those components.
26/ Use the same mated pair that underwent Group 2 inspections.
27/ If a shell size other than shell size 23 is qualified first, then the inspections that are identified under note “27/” in the table shall be performed for any larger shell sizes with single mode fiber.
28/ For qualification with a more limited set of backshells, refer to 4.7.1.1of MIL-PRF-64266.

Sample preparation. Unless otherwise specified, test samples shall be fully assembled into mated pair using the types of cable specified in Requirement 4103 of MIL-STD-1678-4. The termination procedure shall be in accordance with Requirement 4103 of MIL-STD-1678-4 for both temperature range 1 and temperature range 2. Connector termini shall be optically finished with the termini properly seated within their inserts. For mated pair, full sealing capability shall be provided as specified. Connectors shall be provided with backshell or backshell accessory, and attached to an appropriate length of the specified cable type.

4.7.1.2.1 Termini. The minimum number of active termini (termini monitored for optical performance) required for qualification except interoperability testing for each shell size shall be as follows: A minimum of two termini shall be active in connectors of shell size 11 with a two cavity insert, four termini shall be active in a four cavity insert. A minimum of four termini shall be active in connectors of shell sizes 13. A minimum of eight termini shall be active in connectors of shell sizes 15 and 23. For qualification except interoperability, the connector shall be fully populated with the minimum number of active termini and the remaining cavities populated with terminated, but not active, termini (no dummy termini permitted). For interoperability, the connector shall be fully populated and all termini shall be active.

4.7.2 Inspection routine. Connector parts and mated pair shall be tested in accordance with the sequence of table VII and table VIII or as specified (see 3.1). Manufacturers desiring qualification for only backshells, backshell accessories, or dust covers shall, at a minimum, test connectors as specified in the appropriate specification sheet (see 3.1). Group II, III, and IV testing may be conducted simultaneously.

4.7.2.1 Qualification of modified designs. Qualification inspection of items which contain design changes from previously qualified items may be limited to a subset of the qualification inspections identified in 4.7.2. Qualification inspection reductions will be determined by the qualification activity based on the extensiveness of the design changes and the anticipated effects of those changes on the item performance.

4.7.3 Failures. One or more failures shall be cause for refusal to grant qualification approval.

4.7.4 Retention of qualification. To retain qualification, the manufacturer shall verify in coordination with the qualifying activity, the capability of manufacturing products which meet the performance requirements of this specification. Refer to the qualifying activity for the guidelines necessary to retain qualification with respect to this particular specification. The manufacturer shall immediately notify the qualifying activity at any time that the inspection data indicates failure of the qualified product to meet the performance requirements of this specification.

4.7.5 Qualification of connector parts, materials and accessories.

4.7.5.1 Connector receptacles. Qualification of wall (panel) mounted receptacles shall qualify jamnut mounted receptacles.

4.7.5.1.1 Alignment sleeve retainer (ASR). The MIL-PRF-64266/9 ASR is qualified as part of the connector receptacle and not as a separate component. Once qualify as part of the connector receptacle, qualification of the MIL-PRF-64266/9 as a separate part is obtained by similarity.

4.7.5.2 Backshell qualification. Connector backshells shall meet the requirements as specified (see 3.1) for the different shell sizes and other backshell designations.

4.7.5.2.1 Temperature range 1. Initial qualification testing shall be performed for both MIL-PRF-64266/18 split backshells with rear adapters configured both with compression fittings and with banding strap platforms concurrently (see table VII). If MIL-PRF-64266/18 split backshells with rear adapters configured with only one platform (either compression fittings or banding strap) is offered, then each two mated pair listed in table VII shall contain backshells with this one rear adapter platform. If backshells are offered with the other rear adapter platform at a later date, then the same number of mated pairs with the other rear adapter platform must undergo the same qualification sequence listed in table VII.

4.7.5.2.2 Temperature range 2. Initial qualification testing may be performed for both MIL-PRF-64266/12 through /16 solid backshells and on MIL-PRF-64266/19 through /21 split backshells concurrently (see table VIII). The specified number of test samples configured with solid backshells and the specified number of test samples configured with split backshells must undergo the qualification testing.

4.7.5.3 Alternate insert materials (including ASR materials). If a connector with a non-integral insert of one material is qualified, and connectors with a non-integral insert of a second material meet the interoperability, visual and mechanical, size, weight, identification marking, workmanship, insert retention radial strength, insert retention axial strength, terminus insertion and removal force, terminus retention force, maintenance aging, insertion loss, return loss, shock, temperature cycling, life aging, electromagnetic effects, flammability, fungus resistance, and ozone exposure inspections herein, then the connectors with the second insert material are qualified. Connector interoperability shall be performed using a previously qualified plug/receptacle connector with a minimum of two termini from all qualified vendors.

4.7.5.4 Alternate shell/backshell materials. If a connector with a shell/backshell of one material is qualified, and connectors with shells/backshells of a second material meet the visual and mechanical, size, weight, identification marking, workmanship, screw thread, insert retention radial strength, insert retention axial strength, coupling engagement and disengagement torque, backshell and backshell accessory attachment, insertion loss, return loss, cable pull out, external bending moment, mating durability, impact, crush, shock, water pressure, altitude immersion, thermal shock, temperature humidity cycling, temperature cycling, life aging, sand and dust, fluid immersion, electromagnetic effects, salt spray, SO_2/salt spray, flammability, fungus resistance, and ozone exposure inspections herein(including sub-tests for connector coupling engagement and disengagement torque and shell-to-shell conductivity, as applicable), then the connectors with shells/backshells of the second material are qualified.

4.7.4.5 Alternate plating processes. Allowable plating and plating process. To obtain qualification the material (plating or finish), and when specified the process for that plating or finish used, shall conform to 3.3.2. Only, the material and process specified in 3.3.2 shall be allowed. The one exception is the one for the non-conductive finish for aluminum components that shall conform to 3.3.2.3. Alternatives to this finish in 3.3.2.3 may be proposed; however, approval must be granted by the Qualifying Activity (DLA Land and Maritime-VQP).

4.7.5.6 Joint qualification of connectors and termini. Connectors may be qualified using previously qualified termini or using unqualified termini. Connectors shall be qualified using both multimode termini and single mode termini (in different mated pair) see table VII for the circular connector and the applicable specification sheet (see 3.1) for the rectangular connector. The failure of any inspection by any terminus shall be cause for refusal to grant qualification approval.

4.7.5.7 Temperature ranges. Qualification shall consist of both temperature range 1 and temperature range 2. No qualification is granted for a single temperature range.

4.7.5.8 Dust covers. Connector dust covers shall meet the requirements as specified (see 3.1) for the different shell sizes and other dust cover designations.

4.7.5.9 Alternative connector insert cavity allowance for shell size 23. The qualification sequence in table VII and table VIII is valid if the only difference between the two shell size 23 connectors is the number of cavities in the insert, that the 18 cavity insert is produced by the same means as the 36 cavity insert except the process is halted after the first 18 cavities (around the insert outer periphery) is performed.

4.7.5.10 EMI retention nut. One temperature range 2 test sample configured with the MIL-PRF-64266/8 EMI retention nut must undergo the test specified for each shell size.

4.7.5.11 Alternative connector insert cavity allowance for shell size 13. This reduced qualification sequence in table VII and table VIII is valid if the only difference between the two shell size 13 connectors is the number of cavities in the insert, that the 4 cavity insert is produced by the same means as the 6 cavity insert except the process is not performed for the top and bottom cavities (i.e., cavity positions 1 and 4 in the 6 cavity insert).

4.8 Conformance inspection. Conformance inspection shall consist of the inspections and optical tests specified for group A inspection (table IX), group B inspection (table XI), and group C inspection (table XII). Requirements for alternate forms of conformance inspection and equivalent test methods shall be as specified in 4.9.1.

4.8.1 Inspection of product for delivery. Inspection of product for delivery shall consist of group A inspection.

4.8.1.1 Inspection lot. The inspection lot shall consist of the number of units offered for inspection at one time, and all of the same design as covered by one specification sheet.

4.8.1.1.1 Sample unit. A sample unit shall be selected at random from the inspection lot. For conformance inspections, a sample unit shall consist of an individual unit of supply.

4.8.1.2 Group A inspection. Group A inspection shall consist of the inspection tests specified in table IX. All connector parts in the inspection sample shall be subjected to the inspection tests listed.

TABLE IX. Group A inspection.

Inspection tests	Part applicability 1/			Requirement paragraph	Test method
	Connector	Backshell	Dust covers		
Visual and mechanical					
Size 1/	X	X	X	3.10.1	4.9.2.1
Weight 1/	X	X	X	3.10.2	4.9.2.2
Identification marking	X	X	X	3.10.3	4.9.2.3
Screw threads 2/	X	X	X	3.10.6	4.9.2.4
Workmanship	X	X	X	3.10.4	4.9.2.5
Functional					
Backshell and backshell accessory attachment	X	X		3.12.7	4.9.4.7

NOTES:
1/ "X" indicates test applies for particular part(s).
2/ In process inspections or controls may be used to verify conformance to these requirements.

4.8.1.2.1 Sampling plan. Tests shall be performed on 100 percent of the product supplied under this specification, unless otherwise allowed by the qualifying activity (see 4.8.1.2.2).

4.8.1.2.2 Alternate sampling plan for group A inspection. If allowed by the qualifying activity, random sampling may be performed in lieu of 100 percent of product supplied under this specification. Number of samples for random sampling inspected per lot size is specified in table X. This random sampling alternative shall require acceptance criterion of a zero nonconformance regardless of sample size. If any nonconformance is found, then 100 percent inspection shall be used until the qualifying activity is satisfied that the cause for the nonconformance has been corrected and will not reoccur. Also, until the nonconformance has been corrected, inspection with the requirement that data be provided (in lieu of inspection by attribute) may be specified by the qualifying activity.

TABLE X. Alternate sampling plan for group A inspection. 1/

Lot size	Sample size
0 to 8	8
9 to 150	13
151 to 500	50
501 to 1,200	80
1, 201 to 3, 200	125
3201 to 10,000	200
10,001 to 35,000	315
35,001 to 150,000	500
150,001 to 500,000	800
500,001 to > 500,002	1,250

1/ The random sampling alternative and inspection by attributes are applicable for the specified conformance inspections only. For qualification and for initial validation of the process, inspection should be performed on 100 percent of samples with data supplied.

4.8.1.2.3 Process control demonstration and metrics. When specified, critical parameters within the process will be identified, along with the method for measurement and the degree of variability for each parameter. Controls within the process (variability control) will be demonstrated by continual statistical tracking of these critical parameters or other metrics that show a capable sustained process. Sustained process control is considered to be when a Cp_k level of 5 or higher is achieved. This represents a level sufficient to demonstrate an equivalent nonconformance of zero).

4.8.1.2.4 Failures. One or more failures shall constitute group A inspection failure of the sample unit.

4.8.1.2.5 Disposition of sample units. Sample units that have failed any of the group A inspection tests shall not be shipped or submitted for group B testing.

4.8.2 Group B inspection. Group B inspection shall consist of the tests specified in table XI in the order shown. Group B inspection shall be performed on sample units selected from inspection lots which have passed group A inspection. The maximum time from the end of one group B inspection to the beginning of the following group B inspection shall be not greater than 24 months.

TABLE XI. Group B inspection.

Inspection tests	Part applicability 1/			Requirement paragraph	Test method
	Connector	Backshell	Dust covers		
Optical					
Insertion loss (initial)	X			3.11.1	4.9.3.1
Functional					
Connector coupling engagement and disengagement torque	X		X	3.12.6	4.9.4.6
Insert retention radial strength	X			3.12.1	4.9.4.1
Insert retention axial strength	X	X		3.12.2	4.9.4.2
Terminus retention force	X			3.12.4	4.9.4.4

1/ "X" indicates test applies for particular part(s).

4.8.2.1 Sampling plan. A minimum of sixteen sample units shall be selected from a lot of the same PIN within 24 months after the date of notification of qualification and during every 24 month period thereafter, except, when the total production in a 24 month period is less than 500 units of product or a total of 60 months have elapsed since the inspection was performed, in which case only eight specimens shall be tested. At no time shall the group B inspections be extended beyond 60 months.

4.8.2.2 Failures. If one or more sample units fail to pass group B inspection, the lot from which the samples were selected shall be rejected.

4.8.2.3 Disposition of sample units. Sample units which have been subjected to group B inspection may be delivered on the contract or purchase order.

4.8.2.4 Rejected lots. If a group B inspection lot is rejected, the contractor may rework it to correct the defects, or screen out the defective units (if applicable), and resubmit the lot for inspection.

4.8.3 Periodic inspection. Periodic inspection shall consist of group C. Except where the results of these inspections show noncompliance with the applicable requirements (see 4.8.3.1.5), delivery of products which have passed groups A and B inspections shall not be delayed pending the results of periodic inspection.

4.8.3.1 Group C inspection. Group C inspection shall consist of the inspections specified in table XII, in the order shown. Group C inspection shall be made on sample units selected from inspection lots which have passed groups A and B inspections.

4.8.3.1.1 Sample unit preparation. Connectors shall be fully assembled into mated pair using the types of cable specified in the applicable connector specification sheet (see 3.1). Connector termini shall be optically finished with the termini properly seated within their inserts. For mated pair, full sealing capability shall be provided as specified (see 3.1). Connectors shall be provided with backshell or backshell accessory, and attached to an appropriate length of the specified cable type.

TABLE XII. Group C inspection.

Inspection tests	Part applicability 1/			Requirement paragraph	Test method
	Connector	Backshell	Dust covers		
Group I (all mated pairs)					
Optical					
Insertion loss	X	X		3.11.1	4.9.3.1
Return loss	X	X		3.11.5	4.9.3.5
Functional					
Terminus insertion and removal forces	X			3.12.3	4.9.4.3
Group II (2 mated pairs)					
Cable pull out force	X	X		3.13.1	4.9.5.1
Cable seal flexing	X	X		3.13.3	4.9.5.3
Twist	X	X		3.13.4	4.9.5.4
Mating durability	X			3.13.5	4.9.5.5
Return loss	X			3.11.5	4.9.3.5
Insertion loss verification	X			3.11.1	4.9.3.1
Shock	X			3.14.6	4.9.6.15
Water pressure	X	X		3.14.7	4.9.6.16
Group III (2 mated pairs)					
Temperature/humidity cycling	X			3.14.3	4.9.6.2
Life aging	X			3.14.5	4.9.6.4
Insert retention radial strength 2/	X			3.12.1	4.9.4.1
Insert retention axial strength 2/	X			3.12.2	4.9.4.2
Identification marking	X	X	X	3.10.3	4.9.2.3

NOTES:
1/ "X" indicates test applies for particular part(s).
2/ Tests are only applicable for connectors with nonmetallic inserts.

4.8.3.1.1.1 Termini. The minimum number of active termini required for testing for each shell size shall be as follows: A minimum of two termini shall be active in connectors of shell size 11. A minimum of four termini shall be active in connectors of shell sizes 13 and 15. A minimum of eight termini shall be active in connectors of shell size 23. For shell sizes 15 and 23, the active termini shall be placed at different locations in each of the four samples.

4.8.3.1.2 Sampling plan. Group C inspection shall be performed on four connectors of the same PIN with their mating connectors 60 months after initial qualification and within each 5 year period thereafter. All mated pair shall be subjected to group I tests. Mated pairs from the group I tests shall be divided among the group II and III tests.

4.8.3.1.3 Failures. One or more specimen or sample unit failures shall constitute group C inspection failure.

4.8.3.1.4 Disposition of sample units. Sample units which have been subjected to group C inspection shall not be shipped.

4.8.3.1.5 Noncompliance. If a sample fails to pass group C inspections, the manufacturer should notify the qualifying activity of the failure and take corrective action on the materials or processes, or both, as warranted, and on all units of product which can be corrected and which were manufactured under essentially the same conditions, with essentially the same materials, processes, and so forth, and which are considered subject to the same failure. Acceptance of the product should be discontinued until corrective action, acceptable to the Government, has been taken. After the corrective action has been taken, group C inspection should be repeated on additional sample units (all inspection tests or the inspection test which the original sample failed, at the option of the Government). Groups A and B inspection may be reinstituted; however, final acceptance should be withheld until the group C re-inspection has shown that the corrective action was successful. In the event of failure after re-inspection, information concerning the failure and corrective action taken should be furnished to the cognizant inspection activity and the qualifying activity.

4.9 Methods of inspection.

4.9.1 Equivalent test methods and alternate forms of conformance inspection. The use of equivalent test methods and alternate forms of conformance inspection are allowed provided the preparing activity and the qualifying activity have approved the use of

that equivalent test method by that manufacturer. Requests for use of equivalent test methods and alternate forms of conformance inspection (see 4.8) shall be submitted to the qualifying activity. Alternate forms of conformance inspection may be used upon written approval by the qualifying activity. The manufacturer shall have conducted both test methods and have submitted complete test data to the qualifying activity verifying the equivalency of each equivalent test method proposed.

4.9.2 Visual and mechanical inspection. Connector parts shall be examined in accordance with TIA-455-13 to verify that materials, design, construction, physical dimensions, marking, and workmanship are in accordance with the applicable requirements (see 3.3, 3.4, and 3.5).

4.9.2.1 Size (see 3.10.1). Each of the dimensions specified (see 3.1) for the connector parts shall be measured using calibrated measuring devices with the precision and accuracy appropriate for the tolerances specified (see 3.1). Dimensions shall be in accordance with the applicable specification sheets.

4.9.2.2 Weight (see 3.10.2). The connector parts shall be weighed using calibrated scales, having the range, precision, and accuracy appropriate for the tolerances specified (see 3.1).

4.9.2.3 Identification marking. Identification marking on connectors, backshells, and dust covers shall be visually examined and measured for conformance with the requirements of 3.10.3. Inspection for legible markings shall be performed from a distance of at least 6 inches (15 cm) with normal room lighting and without the aid of magnification.

4.9.2.4 Screw threads. Screw threads shall be checked after protective coating by means of ring and plug gauges (see MIL-STD-1373 for guidance) (see 3.10.4).

4.9.2.5 Workmanship inspection. The connectors, backshells, backshell accessories and dust covers shall be visually examined to verify that they meet the workmanship requirements of 3.10.6.

4.9.3 Optical inspections. The optical measurements shall be performed per the applicable TIA-455 series standards with the exception for adhering strictly to the setup and test procedure specified in the applicable 2100 series measurement in Part 2 of MIL-STD-1678. Multiple fibers may not be concatenated during the measurement of change in optical transmittance or optical discontinuity. The center wavelength and light launch conditions for the specified fiber size and temperature range shall be as specified in MIL-STD- 1678-2.

4.9.3.1 Insertion loss (see 3.11.1). The initial insertion loss of multimode connectors shall be measured in accordance with method A of TIA-455-34, using both 70/70 and overfill launch conditions. For subsequent insertion loss tests, 70/70 launch conditions or equivalent shall be used. The insertion loss of single mode connectors shall be measured in accordance with method B of TIA-455-34.

4.9.3.2 Discontinuities (see 3.11.2). The connector shall be tested in accordance with TIA/EIA-455-32 using test equipment having a time resolution sufficient to resolve discontinuities of duration not less than 50 µs. For tests of extended duration, discontinuity measurements may be made at discrete times during the test as approved by the qualifying activity.

4.9.3.3 Crosstalk (see 3.11.3). The crosstalk shall be measured in accordance with TIA-455-42.

4.9.3.4 Change in optical transmittance. This test shall evaluate the change of optical power (transmittance) level of the mated pair due to exposure to one inspection (mechanical or environmental test). The periodicity of the measurement(s) (during the test, when specified) shall be appropriate for the test method (see applicable measurement in MIL-STD-1678-3) and as approved by the qualifying activity.

4.9.3.4.1 Method. The change in optical transmittance shall be measured during and after the test (from a baseline obtained before each test) per TIA-455-20 for transmitted power adhering strictly to the setup and test procedure specified in measurement 2102 of MIL-STD-1678-2. The use of a reference fiber to evaluate the change in optical transmittance due to exposure of the cable to the environmental tests is optional.

4.9.3.5 Return loss (see 3.11.5). The return loss shall be measured in accordance with TIA-455-107 or by an equivalent method (see 4.9.1).

4.9.4 Functional inspections.

4.9.4.1 Insert retention radial strength (see 3.12.1). Unmated connector samples shall be tested for radial strength as described herein. Counterpart test devices for plugs and receptacles shall be supplied by the connector manufacturer which are capable of applying radial torque forces between the insert and its shell body. Outermost termini positions or other means may be used for application of these torques, however, no damage shall occur to the insert or ASR as a result of the test exposure. A radial torque shall be applied up to the minimum specified (see 3.12.1) and held for 1 minute. The same torque shall then be applied in the opposite direction and held for one minute. After this test is completed for forces between the insert and shell body, the ASR shall be placed on (fastened to) the insert. The test shall be repeated for forces between the ASR and insert. This test shall be performed with the ASR placed on (fastened to) both the plug and receptacle.

4.9.4.2 Insert retention axial strength (see 3.12.2). Unmated connector samples shall be tested as follows. An axial load shall be applied to either the front or rear face of the insert up to a minimum value of 100 pounds per square inch (0.69 Mpa) of insert face surface area. The load shall be held for a minimum of 1 minute and the axial displacement measured (see 3.12.2). The same pressure shall then be applied on the opposite face, held for 1 minute and the axial displacement measured. Termini positions within the insert may be either empty or filled during the test.

4.9.4.3 Terminus insertion and removal forces (see 3.12.3). Termini shall be inserted into an unmated connector using a terminus insertion tool and the force required to insert the terminus measured (see 3.12.3). A terminus removal tool shall then be engaged to unlock the terminus. The terminus shall be removed and the force required to remove the terminus measured.

4.9.4.4 Terminus retention force (see 3.12.4). Termini shall be inserted into an unmated connector and tested as follows. Termini shall be subjected to axial compressive loads applied to the front face of the terminus tending to push the terminus to the rear of the connector insert. (Care must be exercised in the design of the force application mechanism so that it does not physically touch the optical fiber endface.) A preload not greater than 3 pounds (13.3 N) may be used to seat the terminus for the initial position measurement. Axial loads shall be applied at a rate of 1.0 pound (4.4 N) per second up to the minimum load specified (see 3.12.4). The terminus position shall be measured while under the specified load. The specified load shall be maintained for a minimum of 5 seconds.

4.9.4.5 Maintenance aging (see 3.12.5).

4.9.4.5.1 Termini (see 3.12.5.1). Unmated connectors shall be tested as follows: Termini shall be inserted and removed from the connector a minimum of ten times. The termini selected for insertion and removal shall be the same termini that are monitored for optical performance. The force required to insert each terminus into the connector and the force required to remove each terminus from the connector shall be measured during the first and final maintenance aging cycle.

4.9.4.5.2 Alignment sleeve retainer (see 3.12.5.2). Unmated connectors shall be tested as follows. The alignment sleeve retainer shall be removed and reassembled to the connector a minimum of 100 times. After completion of the test, the ASR shall be visually examined in accordance with 4.8.2.

4.9.4.6 Connector coupling engagement and disengagement torque (see 3.12.6). Unmated connector samples (or connector and dust cover samples) shall be tested as follows: The two mating parts shall be brought to a position where mechanical mating begins and the torque gauge is at zero indication. The parts shall then be fully mated or coupled and the torque required for mating shall be recorded. The torque gauge shall then be reset to zero indication. The mated parts shall be fully unmated and the torque required for unmating shall be recorded.

4.9.4.7 Backshell and backshell accessory attachment (see 3.12.7 and 3.12.7.1). Connector backshells and backshell accessory attachment shall be manually mated with a torque in accordance with table V and unmated five times to their counterpart connectors. The torque specified in table V shall be applied to mate the backshell or backshell accessory attachment. The torque required to remove the backshell or backshell accessory attachment shall be measured on each unmating. The backshell or backshell accessory attachment shall be visually examined in accordance with 4.9.2 after the test.

4.9.5 Mechanical test methods. One action or process shall be to evaluate the change of optical power (transmittance) level of the mated pair due to exposure to one inspection (i.e., mechanical test). The periodicity of the measurement(s) (during the test, when specified) shall be appropriate for the test method (see applicable measurement in MIL-STD-1678-3) and as approved by the qualifying activity.

4.9.5.1 Cable pull out force (see 3.13.1). When specified (see 3.1), mated pair shall be tested in accordance with TIA-455-6. The axial tensile load shall be applied up to the load specified and shall be maintained for 10 minutes. The change in optical transmittance shall be measured during and after the test (see 4.9.3.4). At the completion of the test, the mated pair shall be visually examined in accordance with 4.9.2.

4.9.5.2 External bending moment (see 3.13.2). When specified (see 3.1), mated pair shall be tested in accordance with the following procedure: The cabled receptacle shall be mounted as in normal service to a rigid wall (panel). After mating the plug and receptacle, a minimum bending moment load of 300 inch-pounds (33.9 N-m) as measured from the wall (panel) shall be applied. The load (P) shall be applied across the smallest continuous exterior dimension of the plug connector backshell (see figure 2 note 4). This section may be circular or conical in the longitudinal direction. The load shall be applied at a rate of approximately 10 inch-pounds (1.1 N-m) per second until the required load is applied. The load shall be held for 1 minute. As an alternate to the load directly applied to the plug connector backshell, a fixture of any convenient design may be used as a rigid bending moment test arm for the application of the applied load. Before mating the cabled plug to the receptacle, this rigid bending moment arm shall be secured to the rear of the plug shell. One design constraint on the fixture shall be that it must not provide support for the connector shell in front of the engaged threads. The change in optical transmittance shall be measured after the test (see 4.9.3.4).

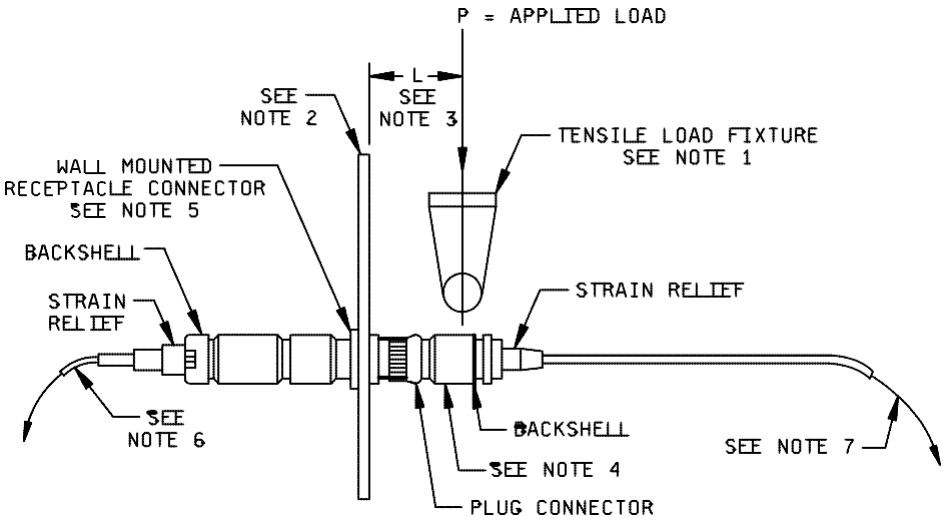

See notes on next page.

FIGURE 2. External bending moment test fixture and connector setup.

NOTES:
1. Point of applied load P. Representation shows one means to apply the load P.
2. Test fixture 1. Test fixture simulating wall (rigid mounting panel) used to secure a receptacle connector in normal service.
3. Distance L is distance from plug connector side of test fixture to point of applied load.
4. Point of applied load. Load is applied on backshell at smallest, continuous section. The smallest, continuous section is defined as the smallest diameter on the backshell that is exposed and at least 2.5 inches (62.5 mm) in length. Section may be circular or conical in longitudinal direction. If conical, load may be applied anywhere along longitudinal length. Alternate means to apply load by using a rigid bending moment arm is not shown.
5 Mount receptacle connector on side opposite in which receptacle connector will be mated to plug connector.
6. Fiber optic cable that connects to optical source end test instrumentation (optional).
7. Fiber optic cable that connects to detector end test instrumentation (optional).

FIGURE 2. External bending moment test fixture and connector setup. – Continued.

4.9.5.3 Cable seal flexing (see 3.13.3). When specified (see 3.1), mated pair shall be tested in accordance with TIA/EIA-455-1. The mated pair shall be exposed to 100 flexing cycles, the assembly rotated approximately 90° in the flexing fixture and then exposed to another 100 flexing cycles. The cycling rate is not to exceed 14 cycles per minute if the test is performed manually. The mated pair shall be visually examined in accordance with 4.8.2 after the test.

4.9.5.4 Twist (see 3.13.4). When specified (see 3.1), mated pair shall be tested in accordance with TIA-455-36. The connector-held fixture shall be rotated 360° at a rate of one cycle per 5 seconds for a total of 50 cycles. One cycle shall consist of a 360° twist ±180°
about the neutral axis. The cable assemblies tested for temperature range 1 shall be placed in tension with minimum loading of 11.0 pounds (48.9 N) applied (such as clamped) at a distance of about 100 times the cable diameter from the connector optical interface. This test shall be performed for temperature range 2 regardless of backshell configuration with a minimum loading of 11 pounds (48.9
N) applied 12 inches below the optical (connecting) interface. The mated pair shall be visually examined in accordance with 4.9.2 after the test. The change in optical transmittance shall be measured during and after the test (see 4.9.3.4).

4.9.5.5 Mating durability (see 3.13.5). Mated pair shall be tested in accordance with TIA-455-21. Five hundred complete (plug and receptacle separating) cycles (mate and unmate) shall be accomplished by hand at a rate not to exceed 1 cycle per 15 seconds. The change in optical transmittance (see 4.9.3.4) shall be measured every 100 mating cycles during the test and after the test. Cleaning of the termini is permitted during and after completion of the test in order to meet the requirements of 3.11.4.

4.9.5.6 Impact (see 3.13.6). The unmated cables assembly with backshell and dust cover shall be tested in accordance with method B of TIA-455-2 (see figure 3). Impacts shall be performed on both a cable assembly with a plug connector and a cable assembly with a receptacle connector. The dust cover shall be screwed onto the connector. The cable assembly shall be extended its full length from the test fixture. The plug/receptacle shall be dropped 8 times (the eight highest drops specified for the moderate service class in TIA-455-2) and rotated after each fall so that the connector strikes the impact pad in eight different radial positions. The test assemblies shall be visually examined for damage in accordance with 4.9.2, then mated. The connector termini may be cleaned after exposure and prior to mating. The change in optical transmittance shall be measured after the test (see 4.9.3.4).

4.9.5.7 Crush (see 3.13.7). When specified (see 3.1), mated pair shall be tested in accordance with TIA-455-26, with the exception that the test sample shall be a connector. The test load shall be 1,250 newtons, and the number of loading cycles shall be 7. The two load bearing surfaces may be faced with one-inch thick rubber pads with a durometer between 60 and 75. Position the connector on the crush pads so that the plug, plug backshell, and portion of receptacle in front of the wall (panel) mounting, is on the crush pads. The change in optical transmittance shall be measured during and after the test (see 4.9.3.4). The mated pair shall be visually examined in accordance with 4.9.2 after the test.

4.9.6 Environmental test methods. Connectors with a composite body shall be unmated and re-mated after each environmental test. Post exposure optical transmittance measurements may be taken up to 24 hours after completion of the environmental exposure. One action or process shall be to evaluate the change of optical power (transmittance) level of the mated pair due to exposure to one inspection (i.e., environmental test). The periodicity of the measurement(s) (during the test, when specified) shall be appropriate for the test method (see applicable measurement in MIL-STD-1678-3) and as approved by the qualifying activity.

4.9.6.1 Thermal shock (see 3.14.2). Mated pair shall be tested in accordance with Measurement 3304 of MIL-STD-1678-31 using test condition A-0. The temperature extremes shall be the specified non-operational temperature extremes for temperature range 1 and the specified operational temperature extremes for temperature range 2 (see 1.2.1b). Change in optical transmittance measurements shall be measured after the test (see 4.9.3.4) for temperature range 1 and measured during and after the test for temperature range 2. The mated pair shall be visually examined in accordance with 4.9.2 after the test.

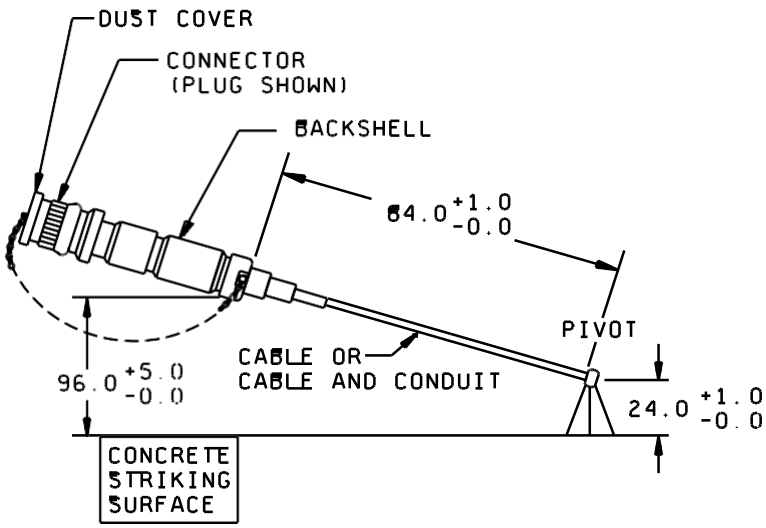

inches	mm	inches	mm
1.0	25.4	84.0	2133.6
5.0	127.0	96	2338.4
24.0	609.6		

NOTES:
1. Dimensions are in inches.
2. Metric equivalents are given for information only.
3. Conduit or other means of stiffening the cable may be used to ensure that the impact occurs on the connector surface in the specified orientation.

FIGURE 3. Impact test fixture connector setup.

4.9.6.2 Temperature/humidity cycling (see 3.14.3). Mated pair shall be tested in accordance with Measurement 3302 of MIL-STD-1678-3. The sub-cycle shall be included in the testing. The change in optical transmittance shall be measured during and after the test (see 4.9.3.4).

4.9.6.3 Temperature cycling (see 3.14.4).

4.9.6.3.1 Temperature range 1. Mated pair shall be tested in accordance with Measurement 3301 of MIL-STD-1678-3 using the temperature profile in Measurement 3301 table 3301-I. The change in optical transmittance shall be measured during and after the test (see 4.9.3.4). The connector assemblies shall be visually examined in accordance with 4.9.2 after the test.

4.9.6.3.2 Temperature range 2. Mated pair shall be tested in accordance with TIA-455-3 using the setup procedure specified in Measurement 3301 of MIL-STD-1678-3 with the temperature profile in table 3301-II. The mated pair shall be visually examined in accordance with 4.9.2 after the test. Test fixtures, if used must be of minimum mass and approved by the qualifying activity. No other mass shall be added inside the chamber. The change in optical transmittance shall be measured during and after the test (see 4.9.3.4). At a minimum for the “during test” measurements, an optical transmittance measurement shall be performed towards the end of each soak period (maintain step) after every 50 cycles. The mated pair shall be visually examined in accordance with 4.9.2 after the test.

4.9.6.4 Temperature life (Life aging, see 3.14.5). Mated pair shall be tested in accordance with Measurement 3410 of MIL-STD-1678-3 at the temperature and duration specified in table XIII. The change in optical transmittance shall be monitored after the test in accordance with 4.9.3.4. The mated pair shall be visually examined in accordance with 4.9.2 after the test. For connectors with dielectric inserts, the inserts shall be inspected for insert retention radial strength (see 4.9.4.1) and insert retention axial strength (see 4.9.4.2) after the test.

TABLE XIII. Life aging test conditions.

Temperature range	Temperature (°C) +5, -0	Duration (hours)
1	110	240
2	165	1,000

4.9.6.5 Freezing water immersion. Mated pair shall be tested in accordance with method A, procedure 1 of EIA/TIA 455-98. The size of the water vessel shall be such that, when the mated pair are placed in the vessel, the mated pair are within 5.9 inches (150 mm) of the sides and bottom of the vessel, and within 5.9 inches (150 mm) of the surface of the water. The change in optical transmittance shall be monitored during and after the test in accordance with 4.9.3.4. At the completion of the test, the mated pair shall be visually examined in accordance with 4.8.2. For the exposure at 14 °F (-10 °C), the water is considered completely frozen when the water temperature reading is less than 30 °F (-1 °C).

4.6.9.6 Sand and dust (see 3.14.7). Mated pair shall be tested in accordance with TIA-455-35 except as noted herein. The connectors on each mated pair shall be oriented in the chamber such that the coupling mechanism is in line with the oncoming airflow. The mated pair shall be affixed in such a manner that the orientation of the mated pair does not change throughout the duration of the test. The 16 hour holding period of step 5.5 is not required. Step 5.6 may proceed immediately after reaching temperature stabilization. The change in optical transmittance shall be measured before the dust test, during the 6 hour exposure period of step 5.4, before step 5.6, during the 6 hour exposure period of step 5.6, and after the test in accordance with 4.9.3.4. The connector coupling engagement and disengagement torque (see 4.9.4.6) shall be measured after the test. The mated pair shall be visually examined in accordance with 4.9.2, after cleaning, at the conclusion of the test.

4.9.6.7 Terminus cleaning (see 3.14.8). The optical face of the terminus shall be cleaned according to the instructions supplied by the qualifying activity. The terminus shall not be removed from its operational position within the connector to facilitate cleaning. The alignment sleeve retainer may be removed to facilitate terminus cleaning.

4.9.6.8 Electromagnetic effects (see 3.14.9). Electromagnetic effects testing of receptacles (without backshells) mated to plugs with backshells and of receptacles mated to dust covers shall be conducted as follows: The test specimens (including terminated cable) shall be tested to determine the propagation characteristics (attenuation or conduction) of the specimen assembly. The shielding effectiveness of a shielded enclosure shall be verified in accordance with MIL-STD-1678-3 measurement 3308 at the discrete frequencies specified in table VI with the test specimen mounted in position. The dynamic range of the test setup shall be measured at each discrete frequency specified in table VI. The measured level of radio frequency (RF) propagation through the test specimen installed in the shielded enclosure shall be verified in accordance with MIL-STD-1678-3 measurement 3308 at each discrete frequency specified in table VI. Use of a conductive gasket for EMI testing is permitted.

4.9.6.8.1 Antenna type and placement. Antenna type and placement shall be in accordance with MIL-STD-1678-3 measurement 3308 with the exception that antenna types shall be in accordance with table XIV. For measurements at VHF and UHF frequencies in the perpendicular direction, the transmit antenna shall be 1 meter above the test specimen cable.

TABLE XIV Antenna types.

Frequency band	Antenna type
VHF, UHF	Log periodic or dipole
Microwave	Horn

4.9.6.8.2. Electromagnetic effects test documentation. Electromagnetic effects test documentation shall be in accordance with MIL-STD-1678-3 measurement 3308.

4.6.9 Fluid immersion (see 3.14.10). Mated pair and separate polymeric samples shall be exposed to each of the fluids identified in accordance with appendix A table in Measurement 3409 of MIL-STD-1678-3, except that exposure to the test temperature for lubricating oil shall be 73 ^{0}C to 77 ^{0}C (163.4 ^{0}F to 170.6 ^{0}F) for temperature range 1. Sample preconditioning shall be done under ambient conditions for a minimum of 4 hours. Each connector assembly and sample of each polymeric material shall be completely dried after each immersion. After testing, the connector assembly shall be visually examined for fluid penetration into the shell body and the connector junction region.

4.6.9.1 Salt spray (corrosion) (see 3.14.11).

4.6.9.10 Temperature ranges 1 and 2. Mated pair shall be tested in accordance with Measurement 3402 of MIL-STD-1678-3. The exposure time shall be 500 hours, and the exposure temperature 35 °C (95 ^{0}F). After test exposure, the mated pair shall be externally cleaned and examined under three-power magnification for salt penetration into the connector junction area and damage to external parts.

4.6.9.10.1 Temperature range 2 only. Connector halves of two unmated pair, with the ASR inserted, and with or without MIL-PRF- 29504/18 and /20 termini (termini on single fiber cable) as applicable, shall be tested to TIA/EIA-455-16, test condition C. Terminus ferrule may be covered up to half way from the end face to the shoulder with plastic protective dust covers. After test exposure, the mated pair shall be externally cleaned and examined under three-power magnification for salt penetration into the connector junction area and damage to external parts. An insertion loss verification test shall be performed to determine if the optical requirement is met. Insertion loss verification shall be performed prior to and after the salt spray test.

4.9.6.11 Flammability (see 3.14.12). Mated pair and unmated connectors shall be tested in accordance with EIA-364-81 and as specified herein. Mated pair shall be exposed to a 0.75 inch (19 mm) flame height applied for ten seconds to the region of the mated pair interface. The change in optical transmittance shall be measured during the test, and after the test once the mated pair has returned to room temperature (see 4.9.3.4). The mated pair shall then be demated, and the unmated connector with backshell and dust cover exposed to a 1.50 inch (38.1 mm) inch flame height applied for 60 seconds to the backshell-cable interface region. For connectors with dielectric inserts, the connector samples shall be exposed to a third flame, with a one and one-half inch flame height. The connector samples shall be remated and the flame shall be applied for 60 seconds to the region of the mated pair interface.

4.9.6.12 Fungus resistance (see 3.14.13). Connector materials not listed as fungus inert in guideline 4 of MIL-HDBK-454 shall be tested in accordance with TIA/EIA-455-56 for a duration of 28 days. Stocks of each fungus, processes, rating and data sheet shall conform to Measurement 3401 of MIL-STD-1678-3.

4.9.6.13 Ozone exposure (see 3.14.14). Polymeric connector parts shall be tested to TIA-455-189 and exposed to an ozone concentration of 100 to 150 parts per million at a temperature of 70˚C +5˚C, -0˚C and an air velocity not less than 0.6 m/s for two hours. The ozone test apparatus and ozone measuring device shall be in accordance with ASTM D1149. If a polymeric part is expanded on the connector, then the part is to be tested at the same level of expansion. Data sheet shall include content in Measurement 3404 appendix A of MIL-STD-1678-3.

4.9.6.14 Vibration (see 3.14.15).

4.9.6.14.1 Temperature range 1. Mated pair shall be tested in accordance with 5.2 of MIL-STD-1678-3 measurement 3201 (test condition B for multiple termini connectors). Optical discontinuities shall be measured during each test (see 4.9.3.2). For mated pair of shell sizes 13 and larger, a minimum of four termini shall be monitored for discontinuity. The change in optical transmittance shall be measured after the test (see 4.9.3.4). The connector shall be visually examined in accordance with 4.9.2 after the test. Lockwires shall not be utilized during this test. Retightening of the connector after each axis and test condition is permitted.

4.6.9.14.2 Temperature range 2. Mated pair shall be tested in accordance with paragraph 5.3 of MIL-STD-1678-3 measurement 3201 as modified below.

a. Sine (swept sine) vibration in accordance with 5.3.a of MIL-STD-1678-3 measurement 3201.

b. Random vibration done at a temperature of 125˚C shall be performed in accordance with 5.3.b of MIL-STD-1678-3 measurement 3201.

c. Random vibration done at an ambient temperature using a specifically tailored curve shall be performed in accordance with
5.3.c of MIL-STD-1678-3 measurement 3201.

4.9.6.15 Shock (see 3.14.16).

4.9.6.15.1 Temperature ranges 1 and 2. Mated pair shall be tested in accordance with MIL-S-901, grade A, class I implementing the restrictions specified in MIL-STD-1678-3 measurement 3202. Optical discontinuities shall be measured during the test (see 4.9.3.2). For connectors of shell sizes 13 and larger, a minimum of four termini shall be monitored for discontinuity. The change in optical transmittance shall be measured after the test (see 4.9.3.4). The mated pair shall be visually examined in accordance with 4.9.2 after the test. For temperature range 1 testing, retightening of the connector after each blow is permitted. For temperature range 2 testing, initially mate the connectors of each mated pair and apply the specified torque value. Mark the position after the torque has been applied and check/record position after each impact. For a mating connector containing a coupling ring ratchet mechanism, do not tighten the coupling ring after each impact if the connector is being tested in addition to the terminus. Otherwise, retighten after each impact. Standard shock fixture 4A for bulkhead mounting shall be used. Supplement test fixture with mounting shall be performed as specified in MIL-STD-1678-3 measurement 3202.

4.9.6.15.2 Temperature range 2 only. Mated pair shall be tested in accordance with TIA-455-14, test condition D implementing the further guidance specified in MIL-STD-1678-3 measurement 3202. Three shocks in each direction shall be applied along the three mutually perpendicular axes of the test sample (18 shocks). Optical discontinuities shall be measured during the test (see 4.9.3.2). For mated pair of shell sizes 13 and larger, a minimum of four termini shall be monitored for discontinuity. The

change in optical transmittance shall be measured after the test (see 4.9.3.4). The mated pair shall be visually examined in accordance with 4.9.2 after the test. Retightening of the connector after each blow is permitted.

4.9.6.16 Water pressure (see 3.14.17). Mated pair shall be tested for water pressure susceptibility as follows: The mated pair shall be immersed in fresh water to an equivalent depth of 32 feet (9.8 m) for a period of 48 hours. The water temperature shall be maintained between 10°C and 35°C during the exposure period. The mated pair shall be externally cleaned, unmated, the ASR and backshell removed, and visually examined for water penetration into the connector. The change in optical transmittance shall be measured after the test (see 4.9.3.4).

4.9.6.17 Shell-to-shell conductivity (see 3.14.18). Mated pair shall be tested in accordance with EIA-364-83. Restrictions for setup, process and evaluation process along with the configurations for test samples to be measured shall be in accordance with MIL-STD-1678-3 Measurement 3408.

4.9.16.18 Altitude immersion (see 3.14.19). Mated pair shall be tested in accordance with Measurement 3305 of MIL-STD-1678-3. The complete mated pair shall be located within the chamber, with the entire mated connector submerged in a distilled water tank within the chamber. Instrument end connections shall not be submerged and shall be either routed outside the chamber or to an optical interface port. The change in optical transmittance shall be measured during and after the test (see 4.9.3.4). During each test cycle, optical transmittance measurements shall be made at each ramp and during the plateau. The fiber optic taps shall be visually examined in accordance with 4.9.2 after the test.

4.9.6.19 Modified SO_2/salt spray (fog) (see 3.14.20). Mated pair shall be tested in accordance with ASTM G85 with the inclusion of Annex A4 and with the restrictions in Measurement 3403 of MIL-STD-1678-3. Clean the test samples with reagent grade (> 99 percent pure) isopropyl alcohol prior to the test. Prepare the salt solution as specified in 8.1 of ASTM B117 ensuring proper pH (see 8.2 of ASTM B117). Purity shall be greater than 99 percent of SO_2 gas in cylinder. Verify that test samples are suspended in the chamber at an angle from 6° to 45° from the vertical. Operate the modified SO_2/salt spray (fog) chamber with a constant salt spray introducing SO_2 gas for 1 hour four times a day (every 6 hours in accordance with A.4.4.4.1 of ASTM G85). Test duration (exposure period) shall be 240 hours. Introduce the SO_2 gas at a flow rate of 1 cubic centimeter per minute per cubic foot (cm^3/min-$ft^{3)}$ (35 cubic centimeters per minute per cubic meter (cm^3/min-m^3)) of cabinet volume using a method to ensure uniform dispersion throughout the chamber interior (such as gas dispersion ring). Measure the salt spray (fog) fallout rate at intervals of every 24 hours and ensure fallout has specified pH (2.5 to 3.2) and a rate of 1 to 3 ml/80cm^2/hr. After the exposure period, remove the test samples from the chamber. Clean test samples by gentle wash or dip in running tap water (not warmer than 38°C (100° F)) for at least 5 minutes. Dry immediately with a stream of clean, dry compressed air or inert gas. After cleaned and dried, the assemblies shall be examined under three-power magnification for modified SO_2/salt penetration into the connector junction area and damage to external parts. When specified for separate testing of the termini, the terminus ferrule may be covered up to half way from the end face with a plastic (protective) cover. These termini shall be tested for insertion loss verification, both prior to and after the modified SO_2/salt spray test, with the termini inserted into a shell size 15 connector. Adequate safety measures must be taken during this test. Fallout rate measurements and otherwise opening of the chamber shall not occur during an SO_2 cycle (dispersion period). Once the chamber is opened, sufficient time must be allotted for exhaust hood or other means of ventilation to remove the SO_2 atmosphere prior to exposure to the chamber interior.

4.10 Interoperability (see 3.4.3.2). Connectors, backshells and ASRs shall be tested as specified in 4.10.1, 4.10.2 and 4.10.3, respectively.

4.10.1 Connector interoperability. Unless otherwise specified (see 3.1), qualified termini shall be inserted into and shall fully populate connector specimens as specified in table XV. Insertion loss shall be measured in accordance with 4.9.3.1. The terminus insertion and removal forces shall be measured in accordance with 4.9.4.3. The terminus retention force shall be measured in accordance with 4.9.4.4. Each configuration tested shall be measured for shell-to-shell conductivity in accordance with 4.9.6.17.

TABLE XV. Connector interoperability test configurations.

Configuration number	Connector receptacle	Connector plug
1	Qualified	Candidate
2	Candidate	Qualified
3	Candidate	Candidate

4.10.2 Backshell interoperability. Unless otherwise specified (see 3.1), candidate backshells shall be tested with qualified connector receptacles and connector plugs as specified in table XVI. Each connector (plug and receptacle) to backshell configuration shall be tested for backshell and backshell accessory attachment in accordance with 4.9.4.7. Each connector (plug and receptacle) to backshell configuration tested shall be measured for shell-to-shell conductivity in accordance with 4.9.6.17. Backshell and backshell accessory attachment may be performed only on the backshells with a straight cable entry angle. Shell-to-shell conductivity shall be performed on backshells with straight, 45 degree and 90 degree cable entry angle

configurations (or at those cable entry angle positions). Shell-to- shell conductivity shall be performed.

TABLE XVI. Backshell interoperability test configurations.

Configuration number	Connector	Backshell
1	Qualified connector receptacles	Candidate backshell
2	Qualified connector plugs	Candidate backshell
3	Candidate connector receptacle	Qualified backshells
4	Candidate connector plug	Qualified backshells

4.10.3 ASR interoperability. Unless otherwise specified (see 3.1), qualified termini shall be inserted into and shall fully populate qualified connector plugs and receptacles and the candidate ASR shall be tested as specified in table XVII. Insertion loss shall be measured in accordance with 4.9.3.1.

TABLE XVII. ASR interoperability test configurations.

Configuration number 1/, 2/	Receptacle	ASR	Plug
1	Qualified 3/	Candidate, receptacle type 5/	Qualified 3/
2	Candidate 4/	Qualified, receptacle type 6/	Candidate 7/

NOTES:

1/ Configuration number 2 does not need to be performed if qualifying the ASR only.

2/ Minimum number of active termini for the ASR interoperability configurations 1 and 2 may be reduced to the number for each shell size specified in 4.7.1.2.1.

3/ Interoperability testing only needs to be completed with each qualified vendors connector plug and connector receptacle. There is no requirement to mix different qualified vendor's connector plugs and receptacles.

4/ If only the connector plug is being qualified, then configuration 2 does not need to be performed.

5/ Perform configuration 1 for each qualified vendor's connector plug and connector receptacle.

6/ Perform configuration 2 for each qualified vendor's ASR.

7/ If only the connector receptacle is being qualified, then a qualified connector plug shall be used.

5. PACKAGING

5.1 Packaging. For acquisition purposes, the packaging requirements shall be as specified in the contract or order (see 6.2). When packaging of materiel is to be performed by DoD or in-house contractor personnel, these personnel need to contact the responsible packaging activity to ascertain packaging requirements. Packaging requirements are maintained by the Inventory Control Point's packaging activity within the Military Service or Defense Agency, or within the military services system commands. Packaging data retrieval is available from the managing Military Department's or Defense Agency's automated packaging files, CD-ROM products, or by contacting the responsible packaging activity.

6. NOTES

(This section contains information of a general or explanatory nature that may be helpful, but is not mandatory.)

6.1 Intended use. The fiber optic connectors covered by this specification are intended for use in military applications where their performance characteristics are required. The connectors covered by this specification are unique due to the fact that these items will be able to operate satisfactorily in systems under the following demanding conditions: 10 g's vibration, over 1000 g's of shock, temperature excursions from -67°C to +185°C and mechanically harsh conditions. In addition, these requirements are verified under a qualification system. Commercial connectors are not designed to withstand these environmental conditions.

6.2 Acquisition requirements. Acquisition documents should specify the following:

a. Title, number, and date of the specification.

b. Unless otherwise specified (see 2.1), the versions of the individual documents referenced will be those in effect on the date of release of the solicitation.

c. Packaging requirements (see 5.1).

d. Quantity of connectors or connector parts required.

NOTE: Termini are not supplied with connectors acquired to this specification.

6.3 Qualification. With respect to products requiring qualification, awards will be made only for products which are, at the time of award of contract, qualified for inclusion in Qualified Product List QPL 64266 whether or not such products have actually been so listed by that date. The attention of the contractors is called to these requirements, and manufacturers are urged to arrange to have the products that they propose to offer to the Federal Government tested for qualification in order that they may be eligible to be awarded contracts or purchase orders for the products cover by this specification. The activity responsible for the QPL and, information pertaining to qualification of products may be obtained from the DLA Land and Maritime, ATTN: VQP, Post Office Box 3990, Columbus, OH 43218-3990. An online listing of products qualified to this specification may be found in the Qualified Products Database (QPD) at http://www.landandmaritime.dla.mil/Programs/QmlQpl/.

6.3.1 Conformity to qualification sample. It is understood that connectors supplied under the contract should be identical in every respect to the qualification sample tested and found satisfactory, except for changes previously approved by the Government. Any unapproved changes from the qualification sample will constitute cause for rejection.

6.3.2 Provisions governing qualification SD-6. Copies of “Provisions Governing Qualification (Qualified Products List) SD-6” may be obtained at http://quicksearch.dla.mil or upon application to the Standardization Document Order Desk, 700 Robbins Avenue, Building 4D, Philadelphia, PA 19111-5094.)

6.3.3 Government witnessing of qualification tests. The qualification activity may require that a Government witness be present during the following tests: Size, screw threads, connector assembly (test sample) fabrication, initial insertion loss, terminus insertion and removal forces, cable pull out force, mating durability, temperature cycling, mechanical shock, salt spray and thermal shock.

6.4 Environmentally preferable material. Environmentally preferable materials should be used to the maximum extent possible to meet the requirements of this specification. As of the dating of this document, the U.S. Environmental Protection Agency (EPA) is focusing efforts on reducing 31 priority chemicals. The list of chemicals and additional information is available on their website http://www.epa.gov/osw/hazard/wastemin/priority.htm. Use of these materials should be minimized or eliminated unless needed to meet the requirements specified herein (see Section 3).

6.5 Definitions. Definitions and terms are in accordance with EIA-440 and as stated below.

6.5.1 Alignment sleeve retainer (ASR). See 3.5.2 herein for ASR connector part description.

6.5.2 Backshell. The backshell attaches to the rear of the connector shell, provides for environmental sealing of the connector, and provides for cable strain relief. The backshell includes the seal or sealing mechanism which seals to a plug or receptacle connector.

6.5.3 Backshell clocking. Connector shell design should include capability to place non-straight backshells in different radial orientations around the connector.

6.5.4 Connector. The connector is the entire cable termination assembly and is composed of the connector shell, connector insert, ASR, and backshell or backshell accessory.

6.5.5 Insert. The insert is the interior portion of the connector which holds and aligns the optical termini.

6.5.6 70/70 restricted launch. A 70/70 restricted launch is beam optics launch with a 70 percent spot size and source aperture equal to 70 percent of the fiber numerical aperture.

6.5.7 Shell. The shell is the front portion of the connector which holds the connector insert and contains the connector coupling mechanism. Shells are either of the plug or receptacle configuration.

6.5.8 Terminus. Terminus is the part of the connector that provides a means of positioning and holding the fiber within the connector.

6.6 Subject term (key word) listing.

Alignment sleeve retainer

Backshells

Cable

Class

Covers, protective

Dust covers

Epoxies

Inserts

Screw threads

Strain relief, cable

Style

6.7 Changes to previous issue. The margins of this specification are marked with vertical lines to indicate modification generated by this specification. This was done as a convenience only and the Government assumes no liability whatsoever for any inaccuracies in these notations. Bidders and contractors are cautioned to evaluate the requirements of this document based on the entire content irrespective of the marginal notations and relationship.

APPENDIX A
CONNECTOR INTERFACE DIMENSIONS

A.1 SCOPE

A.1.1 Scope. This appendix lists the connector interface dimensions and is a mandatory part of the specification. This appendix is a mandatory part of the specification. The information contained herein is intended for compliance.

A.2 DRAWINGS

A.2.1 Interface dimension. The connector interface dimension drawings (figures A-1 through A-6) are listed as follows.

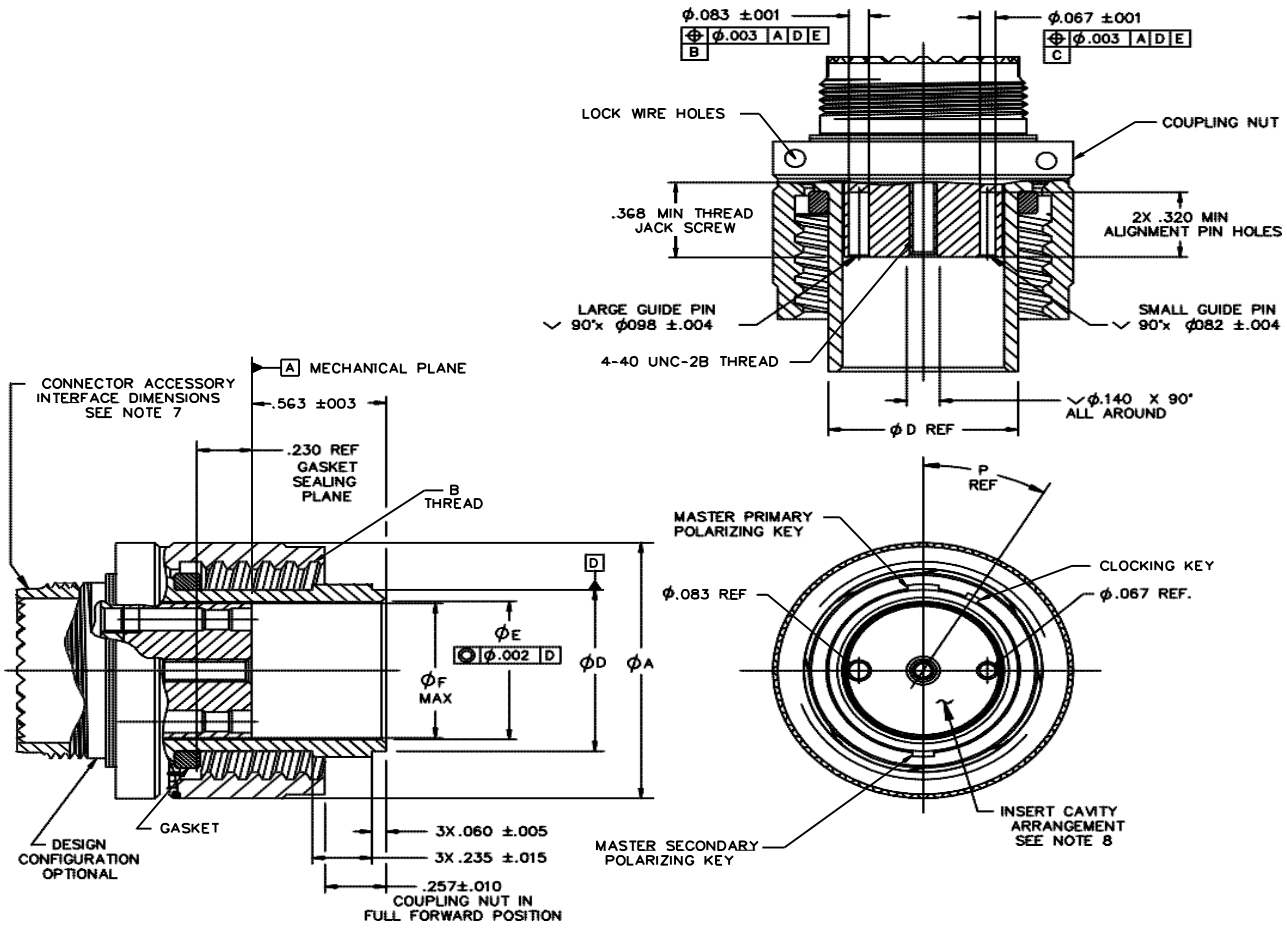

FIGURE A-1. Interface dimensions, connector, plug, fiber optic.

Shell size	A dia max	B thread class - 2A blunt start	D dia ±.005	E dia ±.005	F dia MAX	P° REF
11	1.028 (26.11)	.7500-.1P-.2L-DS	.497 (12.62)	.420 (10.67)	.412 (10.47)	See figure A-3
13	1.141 (28.98)	.8750-.1P-.2L-DS	.621 (15.77)	.500 (12.70)	.488 (12.40)	
15	1.263 (32.08)	1.062-.1P-.2L-DS	.793 (20.14)	.678 (17.22)	.666 (16.92)	
23	1.705 (43.31)	1.5000-.1P-.2L-DS	1.215 (30.86)	1.084 (27.53)	1.070 (27.18)	

NOTES:
1. Dimensions are in inches. Metric equivalents are in parentheses and given for information only.
2. Dimensions apply to plated/finished part.
3. Mating key positions and dimensions are shown on figure A-3.
4. This design information establishes connector intermating criteria.
5. Back end connector design for attachment of nonrotatable backshell is shown on figure A-6.
6. Connector insert termini cavity layout and alignment sleeve retainer (ASR) guide pin cavity layout are shown in appendix B, herein.

inches	mm	inches	mm	inches	mm	inches	mm	inches	mm	inches	mm
.001	.02	.005	.13	.067	1.70	.100	2.54	.235	5.97	.563	14.30
.002	.05	.010	.25	.082	2.08	.140	3.56	.257	6.53		
.003	.08	.015	.38	.083	2.11	.210	5.33	.320	8.13		
.004	.10	.060	1.52	.098	2.49	.230	5.84	.368	9.35		

FIGURE A-1. Interface dimensions, connector, plug, fiber optic - Continued.

APPENDIX A

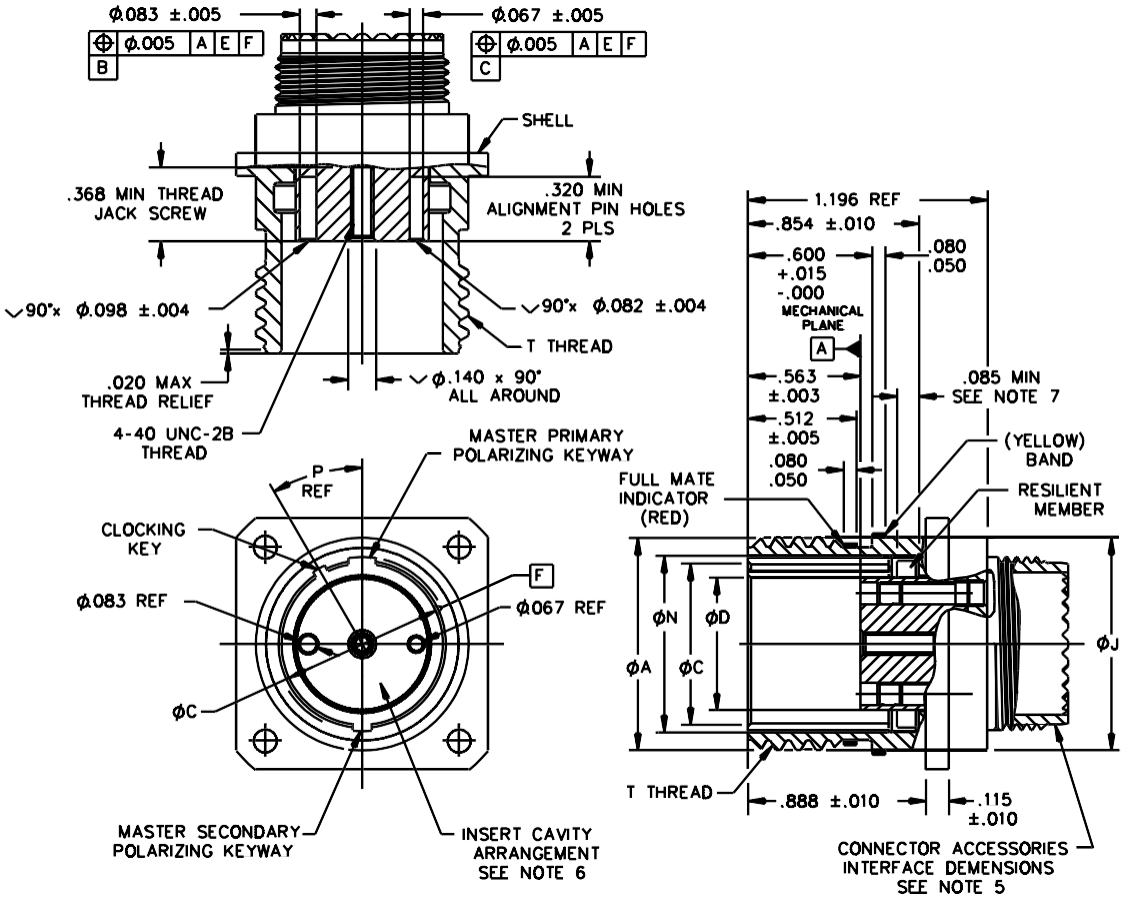

Shell size	A dia max	C dia ±.004	D dia max	J dia max	N dia min	T thread class – 2A blunt start	P° REF
11	.750 (19.05)	.511 (12.98)	.412 (10.47)	.750 19.05)	.585 (14.86)	.7500-.1P-.2L-DS	See figure A-3
13	.875 (22.26)	.635 16.13)	.488 (12.40)	.875 (22.23)	.709 (18.01)	.8750-.1P-.2L-DS	
15	1.062 (26.98)	.805 (20.45)	.666 (16.92)	1.062 (26.98)	.881 (22.38)	1.062-.1P-.2L-DS	
23	1.500 (38.10)	1.229 (31.22)	1.070 (27.18)	1.500 (38.10)	1.304 (33.12)	.5000-.1P-.2L-DS	

inches	mm	inches	mm	inches	mm	inches	mm	inches	mm
.001	.02	.020	.51	.082	2.08	.320	8.13	.600	15.24
.003	.08	.050	1.27	.083	2.11	.368	9.35	.854	21.69
.004	.10	.067	1.70	.098	2.49	.522	13.26	.888	22.56
.010	.25	.080	2.03	.115	2.92	.563	14.30	1.96	49.78

FIGURE A-2. Interface dimensions, connector, receptacle, fiber optic.

NOTES:

1. Dimensions are in inches. Metric equivalents are in parentheses and given for information only.
2. Dimensions apply to plated/finished part.
3. Mating key positions and dimensions are shown on figure A-3.
4. This design information establishes connector intermating criteria.
5. Back end connector design for attachment of nonrotatable backshell is shown on figure A-6.
6. Connector insert termini cavity layout and alignment sleeve retainer (ASR) guide pin cavity layout are shown in appendix B, herein.
7. The resilient member shall be used as the standardized means to ensure shell-to-shell conductivity by acting as the contact member between the connector plug and the connector receptacle. This resilient member shall be conductive, have an initial height of .085 inches (2.159 mm) minimum, and be able to displace (deflect) down to .040 inches (1.016 mm) without taking a permanent set. The resilient member is applicable only for connectors with conductive plating.

FIGURE A-2. Interface dimensions, connector, receptacle, fiber optic – Continued.

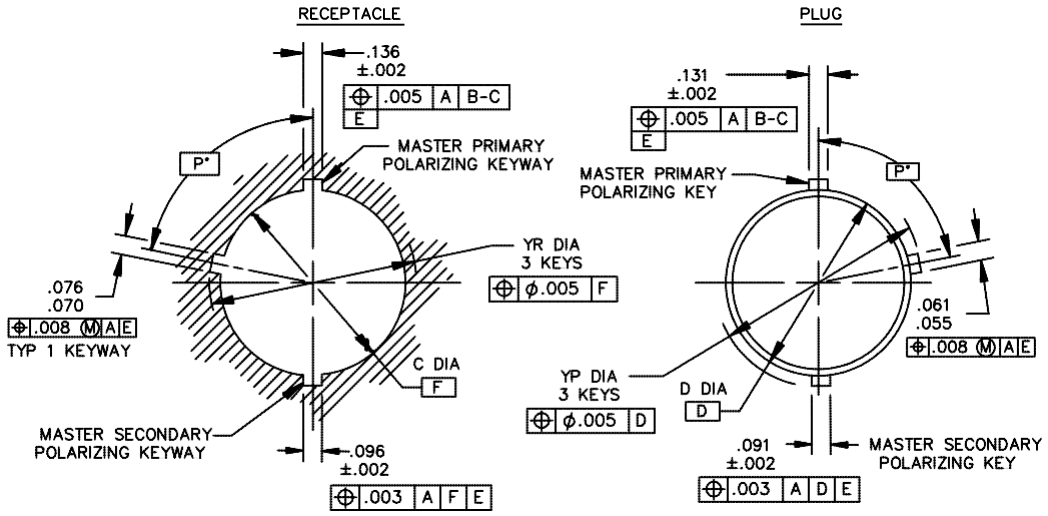

inches	mm	inches	mm	inches	mm	inches	mm	inches	mm	inches	mm
.002	.02	.005	.10	.061	.51	.071	2.49	.096	8.13	.136	13.26
.003	.08	.055	.25	.065	1.27	.091	2.92	.131	9.35		

NOTES:

1. Dimensions are in inches. Metric equivalents are given for information only.
2. Datum A, B, and C details are specified on figure A-1 herein.

FIGURE A-3. Connector, fiber optic, position of key and keyway mating.

APPENDIX A

TABLE A-I. Keying identifer for shell size 11.

Keying identifier	P degrees±5	Keying identifier	P degrees±5
1	55	5	230
2	80	6	255
3	105	7	280
4	130	8	305

TABLE A-II. Keying identifier and positions for shell sizes 13 through 23.

Keying identifier	P degrees±5	Keying identifier	P degrees±5	Keying identifier	P degrees±5
1	30	5	130	9	255
2	55	6	155	A	280
3	80	7	205	B	305
4	105	8	230	C	330

TABLE A-III. YR AND YP diameters for shell sizess 11 through 23.

Shell size	YR dia±.004	YP dia ±.004
11	.575 (14.61)	.555 (14.10)
13	.699 (17.76)	.679 (17.25)
15	.871 (22.12)	.851 (21.62)
23	1.294 (32.87)	1.271 (32.28)

FIGURE A-III. Connector, fiber optic, position of key and keyway mating - Continued.

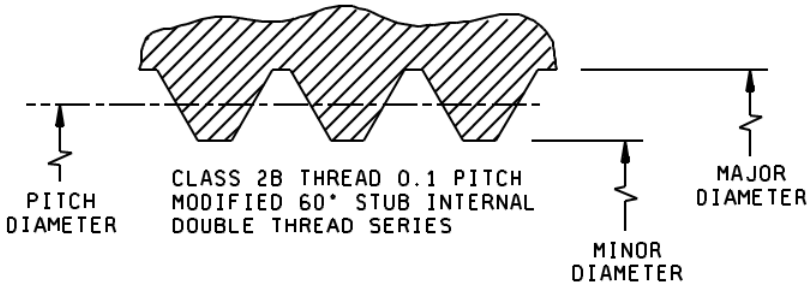

INTERNAL THREADS

Shell size	Designation		
	Thread size	Pitch	Lead
11	.7500	.1	.2
13	.8750		
15	1.0625		
23	1.5000		

inches	mm	inches	mm	inches	mm	inches	mm	inches	mm
.100	2.54	.7500	19.050	.8590	21.819	1.0285	26.124	1.4520	36.881
.200	5.10	.7540	19.152	.8750	22.225	1.0405	26.429	1.4660	37.236
.7042	17.887	.7700	19.588	.8790	22.327	1.0625	26.988	1.4780	37.541
.7142	18.141	.8292	21.062	.8950	22.733	1.0665	27.089	1.5000	38.100
.7240	18.390	.8392	21.316	1.0025	25.464	1.0865	27.597	1.5040	38.202
.7340	18.644	.8490	21.565	1.0145	25.768	1.4400	36.576	1.5240	38.710

Shell size	Internal thread limits of size					
	Minor diameter limits		Pitch diameter limits		Major diameter limits	
	Max	Min	Max	Min	Max	Min
11	.7142	.7042	.7340	.7240	.7700	.7540
13	.8392	.8292	.8590	.8490	.8950	.8790
15	1.0145	1.0025	1.0405	1.0285	1.0865	1.0665
23	1.4520	1.4400	1.4780	1.4660	1.5240	1.5040

NOTES:
1. Dimensions are in inches. Metric equivalents are given for information only.
2. Dimensions apply to plated/finished part.
3. Threads are to be inspected with a 6h go-gauge and a 6g no-go-gauge. FIGURE A-4.

Connector mating threads (internal).

APPENDIX A

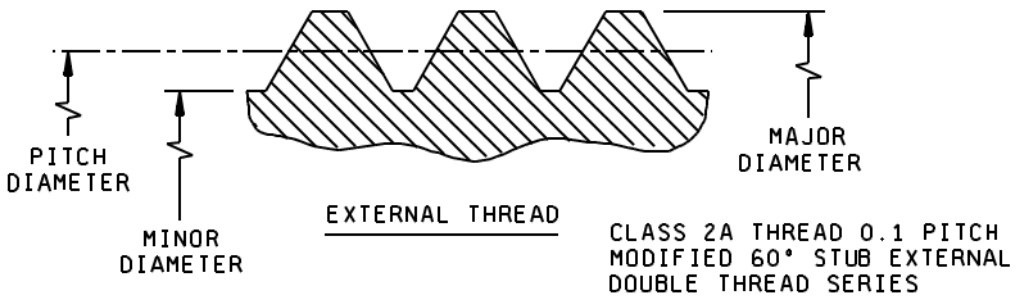

Shell size	Designation		
	Thread size	Pitch	Lead
11	.7500	.1	.2
13	.8750		
15	1.0625		
23	1.5000		

inches	mm	inches	mm	inches	mm	inches	mm	inches	mm
.100	2.54	.7405	18.809	.8475	21.526	1.0165	25.819	1.4260	36.220
.200	5.10	.7485	19.012	.8655	21.984	1.0265	26.073	1.4540	36.932
.6785	17.23	.7500	19.050	.8735	22.187	1.0485	26.632	1.4640	37.186
.6925	17.590	.035	20.409	.8750	22.225	1.0605	26.937	1.4860	37.744
.7145	18.148	.8175	20.769	.9705	24.651	1.0625	26.988	1.4980	38.049
.7225	18.352	.8395	21.323	.9885	25.108	1.4080	35.763	1.5000	38.100

Shell size	External thread limits of size					
	Minor diameter limits		Pitch diameter limits		Major diameter limits	
	Max	Min	Max	Min	Max	Min
11	.6925	.6785	.7225	.7145	.7485	.7405
13	.8175	.8035	.8475	.8395	.8735	.8655
15	.9885	.9705	1.0265	1.0165	1.0605	1.0485
23	1.4260	1.4080	1.4640	1.4540	1.4980	1.4860

NOTES:
1. Dimensions are in inches. Metric equivalents are given for information only.
2. Dimensions apply to plated/finished part.

Threads are to be inspected with a 6h go-gauge and a 6g no-go- gauge

FIGURE A-5. Connector mating threads (external).

APPENDIX A

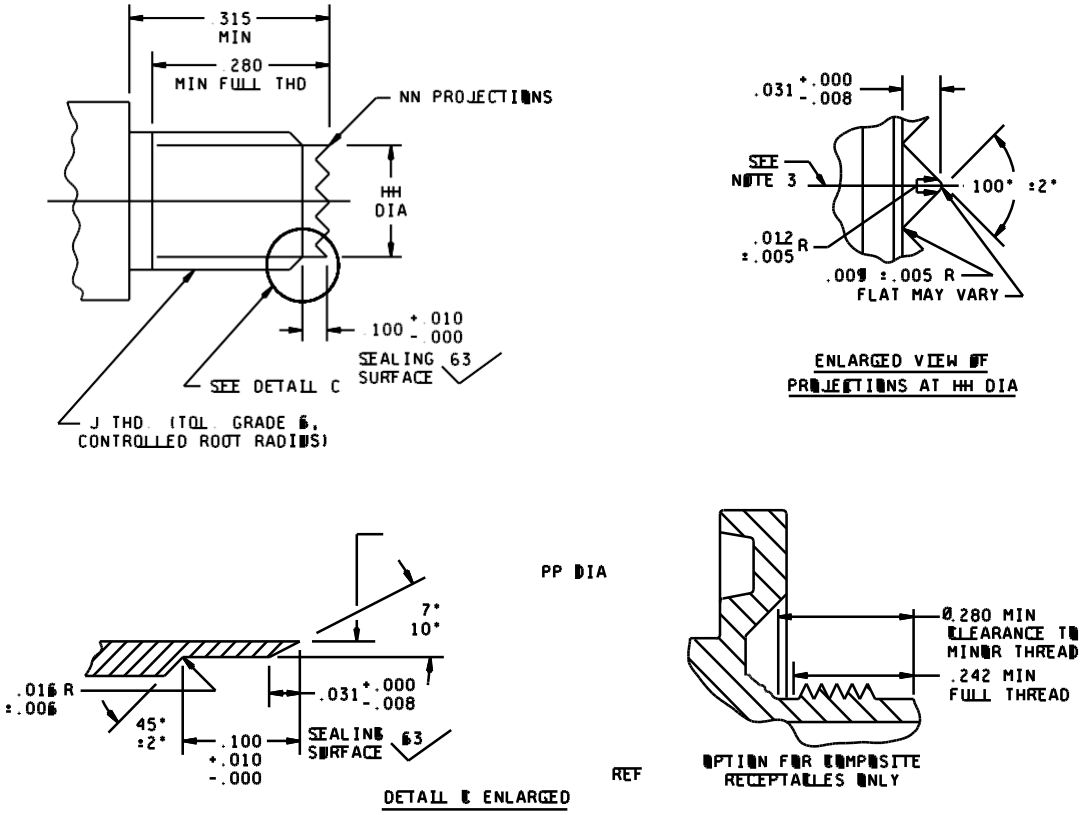

Shell size	HH +.00, -.006	NN	PP max	J thread
11	.534 (13.56)	16	.475 (12.07)	M15x1.0-6g 0.100R
13	.653 (16.58)	20	.589 (14.96)	M18x1.0-6g 0.100R
15	.810 (20.57)	24	.714 (18.14)	M22x1.0-6g 0.100R
23	1.282 (32.56)	40	1.195 (30.35)	M34x1.0-6g 0.100R

inches	mm	inches	mm	inches	mm	inches	mm	inches	mm
.100	2.54	.7405	18.809	.8475	21.526	1.0165	25.819	1.4260	36.220
.200	5.10	.7485	19.012	.8655	21.984	1.0265	26.073	1.4540	36.932
.6785	17.23	.7500	19.050	.8735	22.187	1.0485	26.632	1.4640	37.186
.6925	17.590	.035	20.409	.8750	22.225	1.0605	26.937	1.4860	37.744
.7145	18.148	.8175	20.769	.9705	24.651	1.0625	26.988	1.4980	38.049
.7225	18.352	.8395	21.323	.9885	25.108	1.4080	35.763	1.5000	38.100

FIGURE A-6. Interface dimensions, connector, backshell accessory attachment.

Metric external thread dimension J						
Designation (thread size)	Major diameter		Pitch Diameter		Minor diameter	
	Max	Min	Max	Min	Max	Min
M15x1.0-6g 0.100R	14.974	14.974	14.324	14.206	13.747	13.557
M18x1.0-6g 0.100R	17.974	17.974	17.234	17.206	16.747	16.557
M22x1.0-6g 0.100R	21.974	21.974	21.234	21.206	21.747	20.557
M34x1.0-6g 0.100R	33.974	33.974	33.324	33.199	32.747	32.500

NOTES:
1. Dimensions are in inches.
2. Metric equivalents are given for information only.
3. The centerline of specified projection must be located on the vertical centerline within 2 degrees of the master primary polarizing key or keyway.

FIGURE A-6. Interface dimensions, connector, backshell accessory attachment - Continued.

APPENDIX B

CONNECTOR INSERT ARRANGEMENTS AND INTERFACE DIMENSIONS

B.1 SCOPE

B.1.1 Scope. This appendix lists the connector insert arrangements and interface dimensions. This Appendix is a mandatory part of the specification. The information contained herein is intended for compliance.

B.2 APPLICABLE DOCUMENTS

B.2.1 Non-Government publications. The following document forms a part of this document to the extent specified herein. Unless otherwise specified, the issues of these documents are those cited in the solicitation or contract.

AMERICAN SOCIETY OF MECHANICAL ENGINEERS (ASME)

ASME Y14.5M - Dimensioning and Tolerancing. (DoD adopted)

(Copies of this document can be obtained online at http://www.asme.org/kb/standards or by contacting the American Society of Mechanical Engineers, 3 Park Avenue, New York, NY 10016-5990).

B.3 REQUIREMENTS

B.3.1 Dimensions. Dimensions shall be in accordance with figures B-1 through B-17 herein, and the following dimensional data:

a. ▼ indicates the insert indexing feature position and vertical centerline of insert arrangement.

b. Dimensioning and tolerancing in accordance with ASME Y14.5M. (Dimensions are true position and are in inches.)

c. Metric equivalents are given in parentheses for general information only.

d. Dimensions, features and markings shown are for engaging face of pin (plug) insert and the engaging face of the socket (receptacle)insert.

e. Unless otherwise indicated, dimensions are symmetrical about centerlines.

f. Each insert arrangement is shown in the "normal position" with indexing feature at top of vertical centerline of the engagement face. See figure B-1 through B-17.

g. Shell polarization shall be in accordance with figure A-3 of MIL-PRF-64266, appendix A.

h. Tolerance is + .010 for three decimal places and + .030 for two decimal places unless otherwise stated.

APPENDIX B

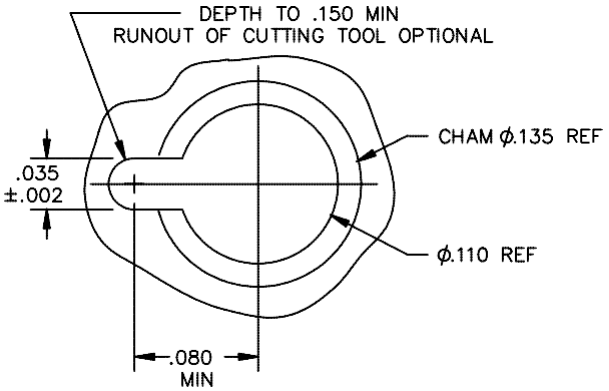

inch	mm	inch	mm	inch	mm
.002	.051	.110	2.79	.150	3.81
.035	.0889	.135	3.43	.080	2.03

NOTES:
1. Dimensions are in inches. Metric equivalents are given for information only.
2. Dimensions are common to figures for insert cavity keying orientation figures B-3, B-5, B-7, B-9, B-11, B-13 and B15.
3. For hole locations, see figures for insert cavity locations, figures B-2, B-4, B-6, B-8, B-10, B-12 and B14.
4. The ends of two adjacent keyways may run together to form one continuous keyway for insert cavity positions. Separate keyways for each of these cavity positions are preferred.

FIGURE B-1. Keyway dimensions detail (common to all keyed inserts).

APPENDIX B

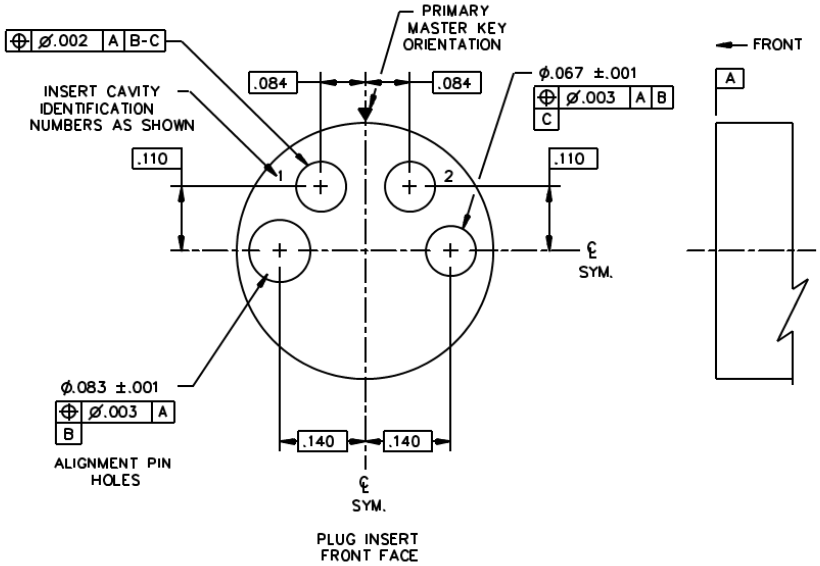

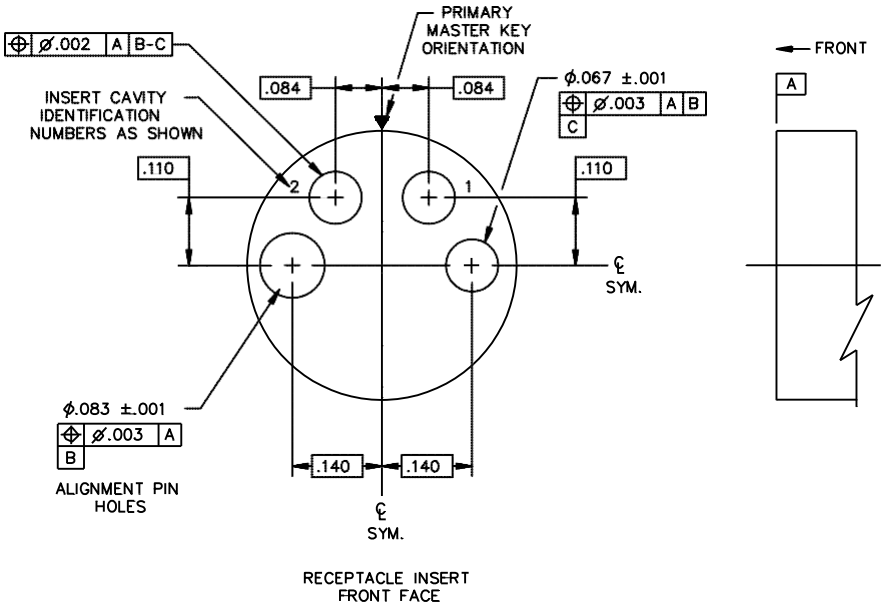

Shell size	Shell size designator	Arrangement number	Number of termini
11	B	1	2

inches	mm	inches	mm	inches	mm	inches	mm
.001	.025	.003	.076	.083	2.12	.110	2.79
.002	.051	.067	1.70	.084	2.13	.140	3.56

NOTE:
1. Dimensions are in inches. Metric equivalents are given for information only.

FIGURE B-2. Insert cavity locations, two-position termini arrangement for shell size 11.

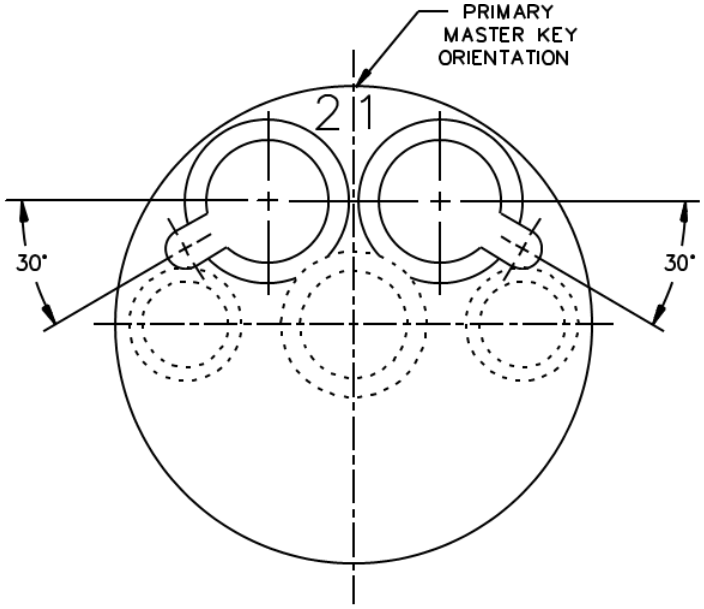

PLUG INSERT - REAR FACE

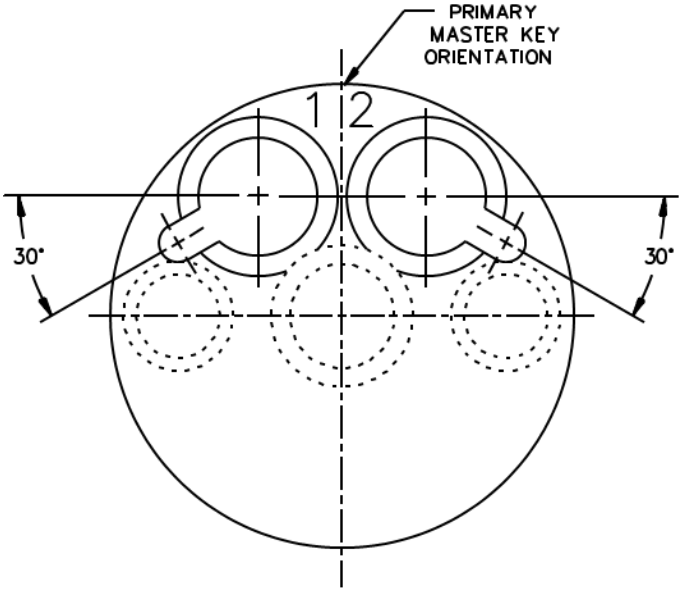

RECEPTACLE INSERT - REAR FACE

Shell size	Shell size designator	Arrangement number	Number of cavities
11	B	1	2

NOTES:
1. Angular tolerance ± .5º.
2. For hole location see figure B-2.

FIGURE B-3 Insert cavity keying orientation, two-position arrangements for shell size 11.

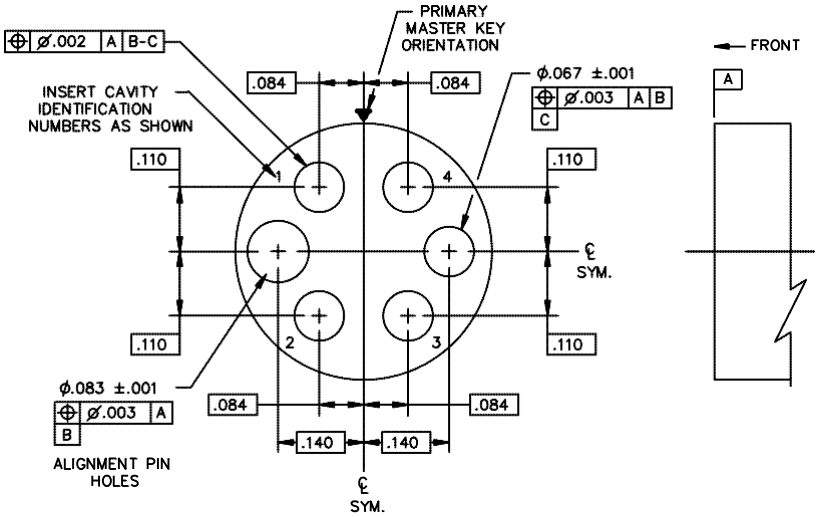

PLUG INSERT
FRONT FACE

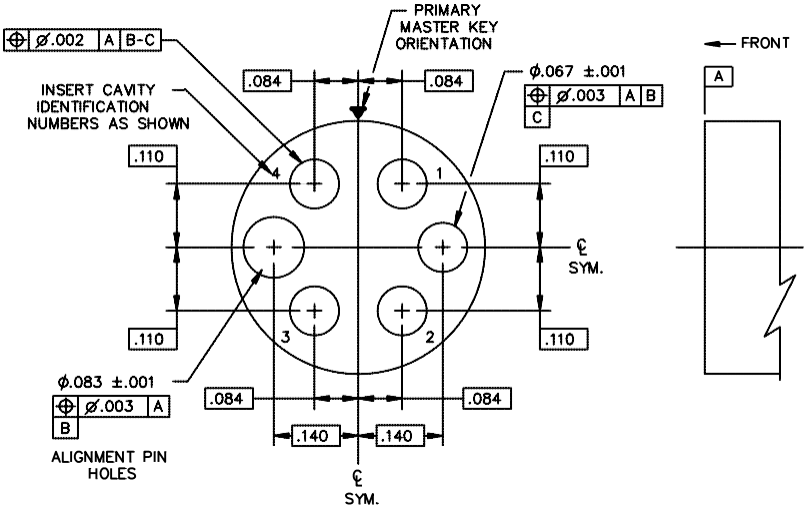

RECEPTACLE INSERT
FRONT FACE

Shell size	Shell size designator	Arrangement number	Number of termini
11	B	2	4

inches	mm	inches	mm	inches	mm	inches	mm
.001	.025	.003	.076	.083	2.12	.110	2.79
.002	.051	.067	1.70	.084	2.13	.140	3.56

NOTES:
1. Dimensions are in inches. Metric equivalents are given for information only.

FIGURE B-4. Insert cavity locations, four-position termini arrangement for shell size 11.

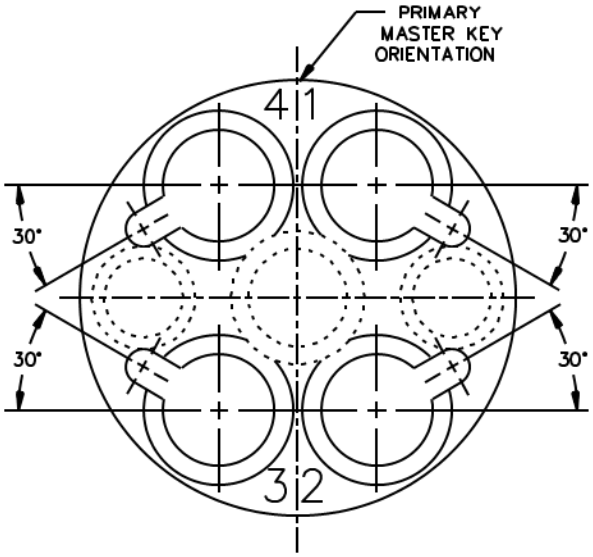

PLUG INSERT - REAR FACE

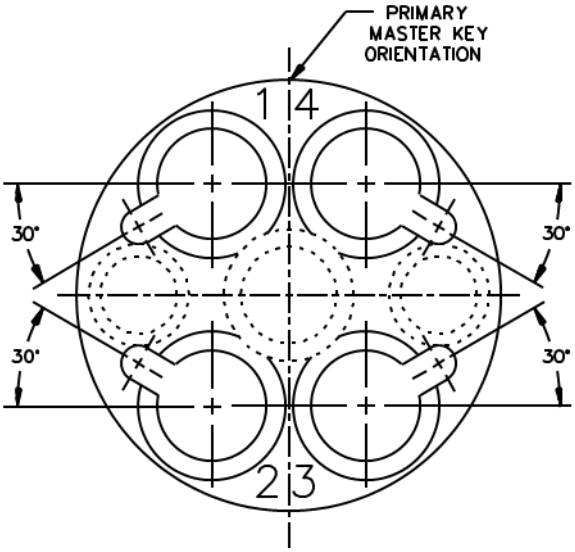

RECEPTACLE INSERT – REAR FACE

Shell size	Shell size designator	Arrangement number	Number of cavities
11	B	2	4

NOTES:

1. Angular tolerance ± .5º.
2. For hole location see figure B-4.

FIGURE B-5. Insert cavity keying orientation, four position cavity arrangement for shell size 11.

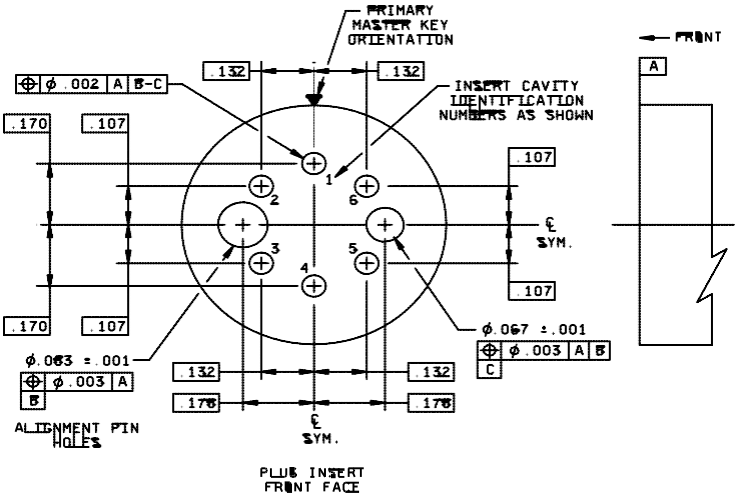

PLUG INSERT FRONT FACE

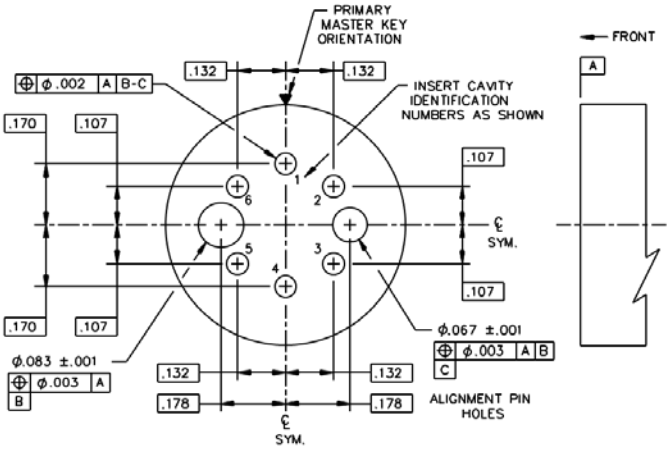

RECEPTACLE INSERT FRONT FACE

Shell size	Shell size designator	Arrangement number	Number of termini
13	C	1	6

inches	mm	inches	mm	inches	mm
.001	.025	.067	1.70	.132	3.35
.002	.051	.083	2.12	.170	4.32
.003	.076	.107	2.72	.178	4.52

NOTES:
1. Dimensions are in inches. Metric equivalents are given for information only

FIGURE B-6. Insert cavity locations, six-position termini arrangement for shell size 13.

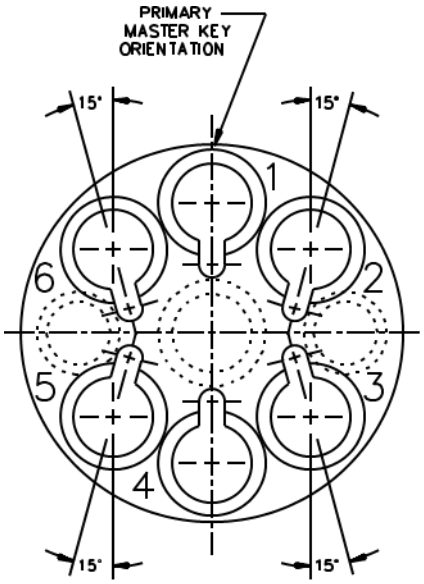

PLUG INSERT - REAR FACE

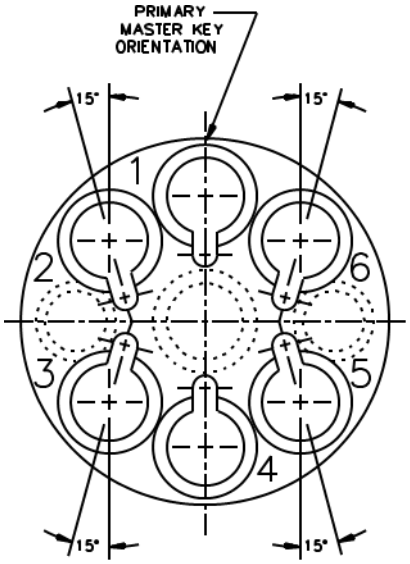

RECEPTACLE INSERT - REAR FACE

Shell size	Shell size arrangement	Arrangement number	Number of cavities
13	C	1	6

NOTES:

1. Angular tolerance ± .5º.
2. For hole location see figure B-6.

FIGURE B-7. Insert cavity keying orientation, six position cavity arrangement for shell size 13.

APPENDIX B

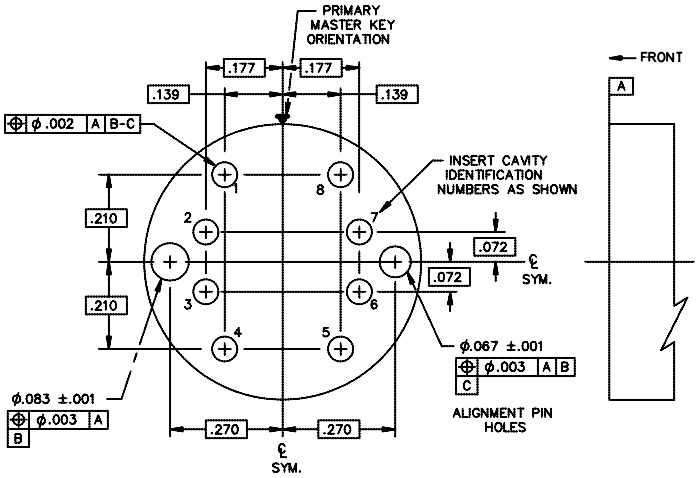

PLUG INSERT FRONT FACE

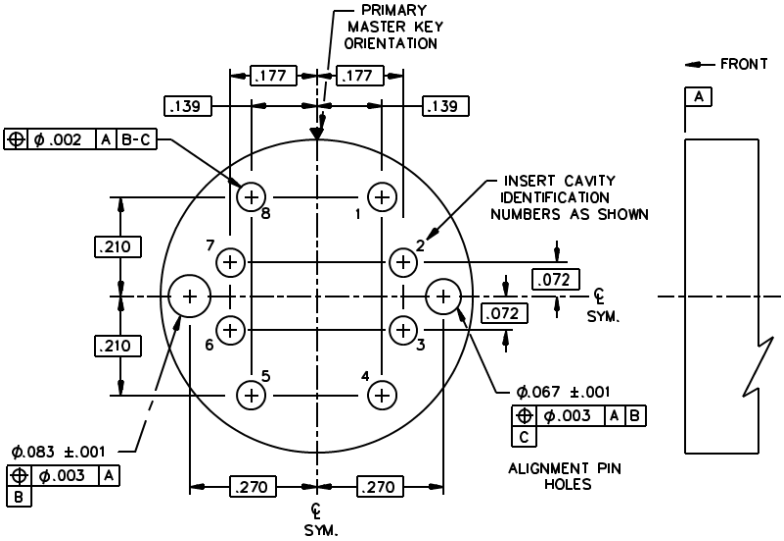

RECEPTACLE INSERT FRONT FACE

Shell size	Shell size designator	Arrangement number	Number of termini
15	D	1	8

inches	mm	inches	mm	inches	mm
.001	.025	.067	1.70	.139	3.53
.002	.051	.072	1.83	.177	4.50
.003	.076	.083	2.12	.210	5.33
				.270	6.86

NOTE:
1. Dimensions are in inches. Metric equivalents are given for information only.

FIGURE B-8. Insert cavity locations, eight-position termini arrangement for shell size 15.

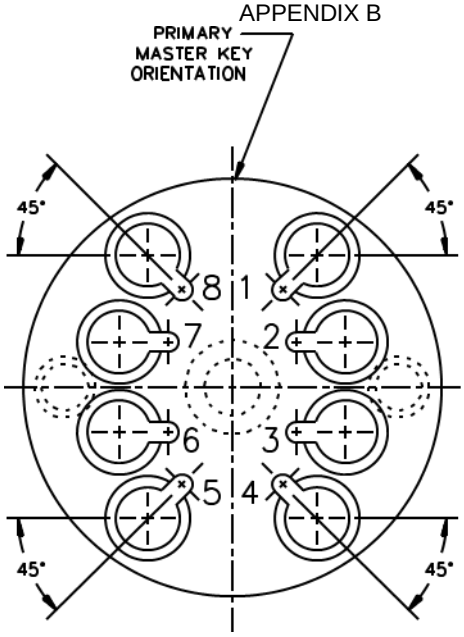

PLUG INSERT - REAR FACE

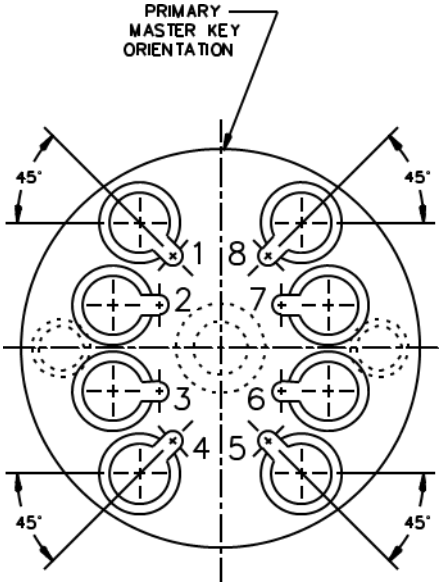

RECEPTACLE INSERT - REAR FACE

Shell size	Shell size designator	Arrangement number	Number of cavities
15	D	1	8

NOTES:

1. Angular tolerance ± .5º.
2. For hole location see figure B-8.

FIGURE B-9. Insert cavity keying orientation, eight position cavity arrangement for shell size 15.

APPENDIX B

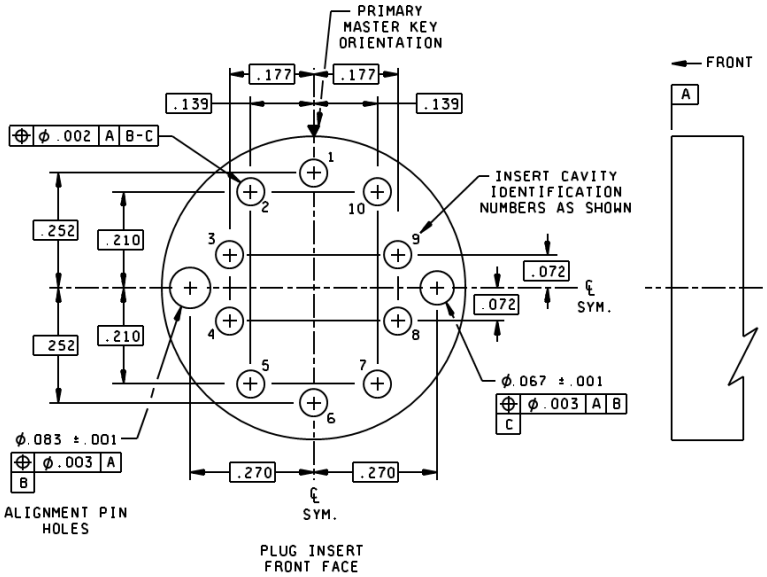

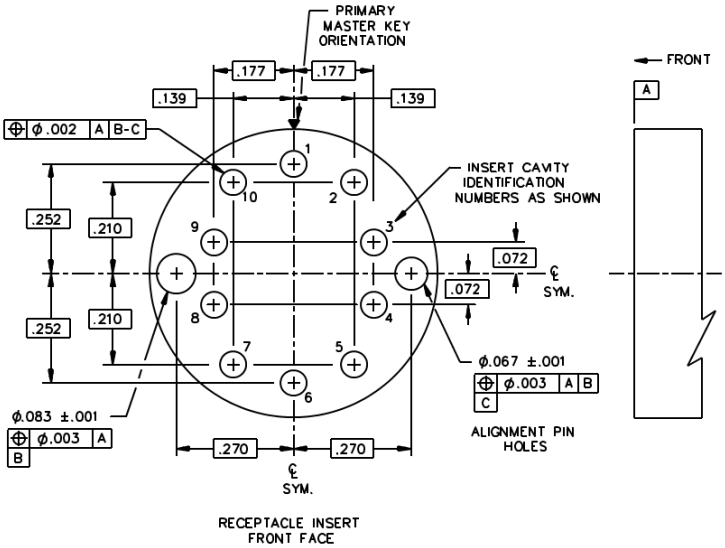

Shell size	Shell size designator	Arrangement number	Number of termini
15	D	2	10

inches	mm	inches	mm	inches	mm	inches	mm	inches	mm
.001	.025	.003	.076	.072	1.83	.139	3.53	.210	5.33
.002	.051	.067	1.70	.083	2.12	.177	4.50	.252	6.40
								.270	6.86

NOTE:
1. Dimensions are in inches. Metric equivalents are given for information only.

FIGURE B-10. Insert cavity locations, ten-position termini arrangement for shell size 15.

APPENDIX B

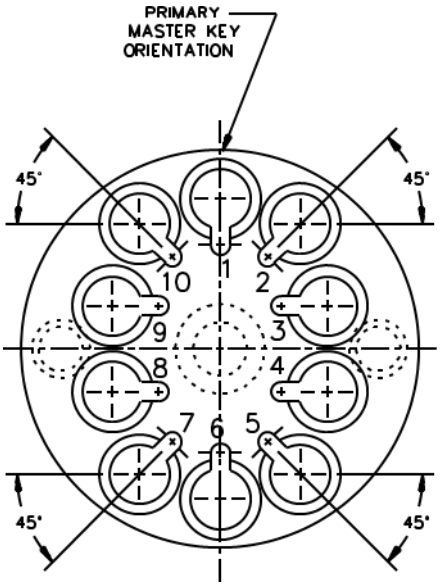

PLUG INSERT - REAR FACE

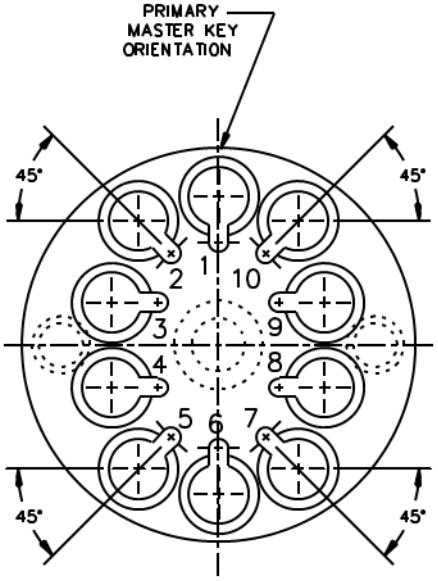

RECEPTACLE INSERT - REAR FACE

Shell size	Shell size designator	Arrangement number	Number of cavities
15	D	2	10

NOTES:
1. Angular tolerance ± .5º.
2. For hole location see figure B-10.

FIGURE B-11. Insert cavity keying orientation ten position cavity arrangement for shell size 15.

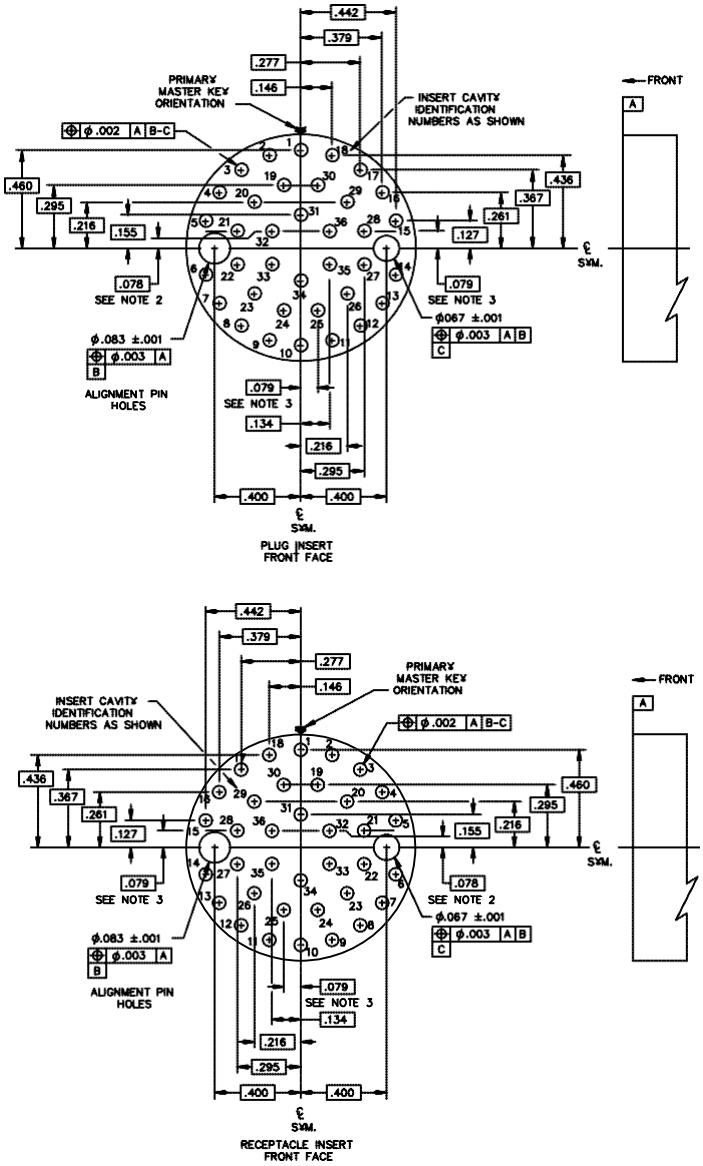

FIGURE B-12. Insert cavity locations, thirty six-position termini arrangement for shell size 23.

APPENDIX B

Shell size	Shell size designator	Arrangement number	Number of termini
23	H	1	36

inches	mm	inches	mm	inches	mm	inches	mm	inches	mm	inches	mm
.001	.025	.078	2.01	.134	3.40	.261	6.63	.379	9.63	.460	11.68
.002	.051	.079	2.01	.146	3.71	.277	7.04	.400	10.16		
.003	.076	.083	2.12	.155	3.94	.295	7.49	.436	11.07		
.067	1.70	.127	3.23	.216	5.49	.367	9.32	.442	11.23		

NOTES:
1. Dimensions are in inches. Metric equivalents are given for information only.
2. Cavity locations 32, 33, 35 and 36 are positioned at .078 inch from the horizontal centerline.
3. Cavity locations 21, 22, 27, and 28 are located at .079 inch from the horizontal centerline.

FIGURE B-12. Insert cavity locations, thirty six-position termini arrangement for shell size 23 – Continued.

APPENDIX B

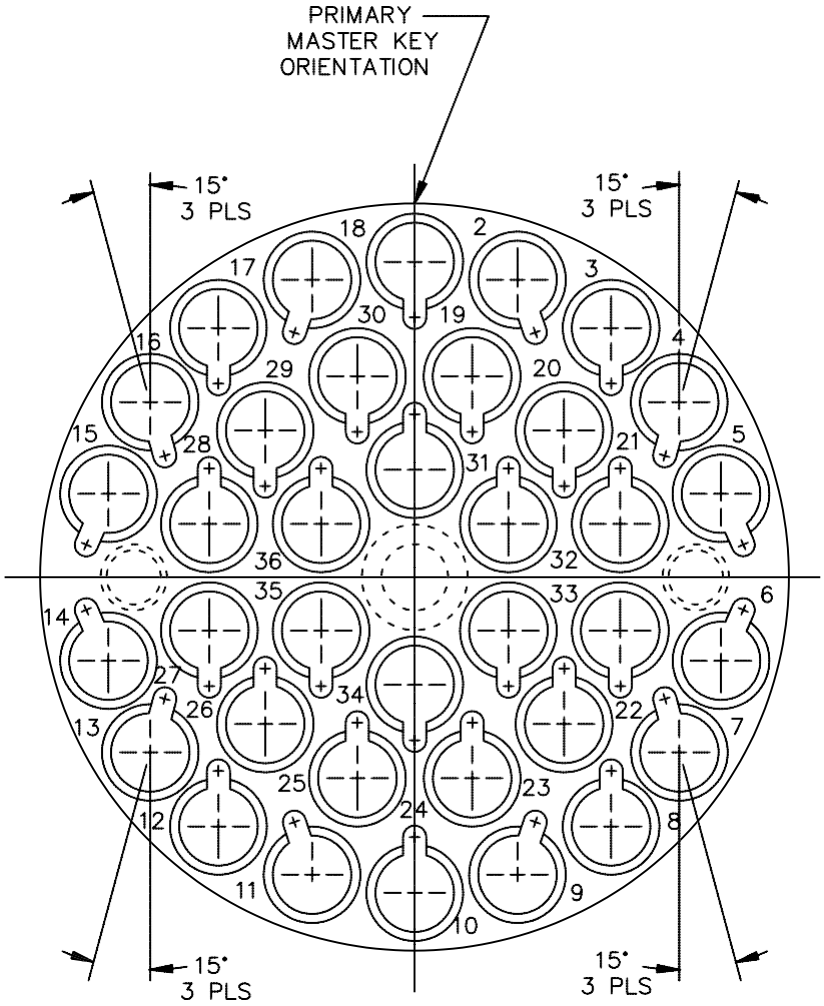

PLUG INSERT REAR FACE

FIGURE B-13 – Insert cavity keying orientation, 36 position cavity arrangement for shell size 23.

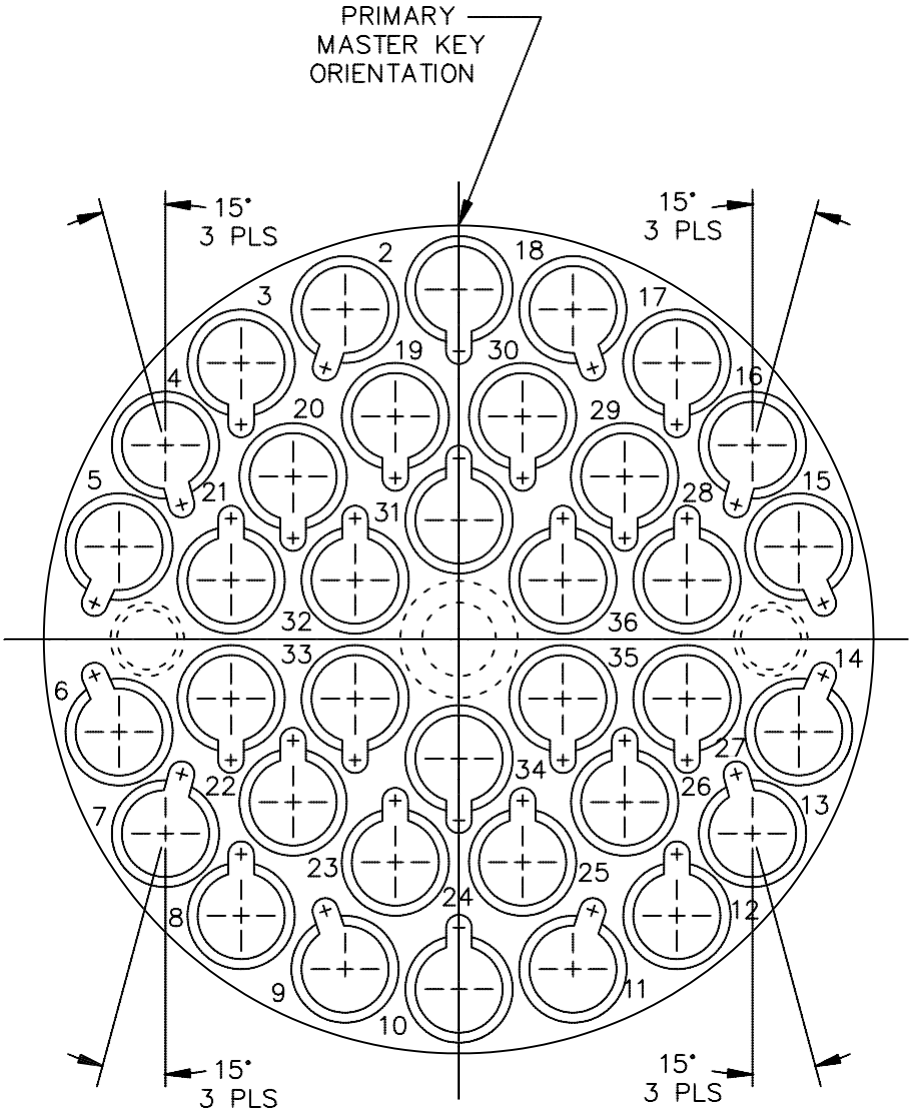

RECEPTACLE INSERT REAR FACE

Shell size	Shell size designator	Arrangement number	Number of cavities
23	H	1	36

NOTES:
1. Angular tolerance ± .5º.
2. For hole location see figure B-12.

FIGURE B-13. Insert cavity keying orientation, 36 position cavity arrangement for shell size 23 – Continued.

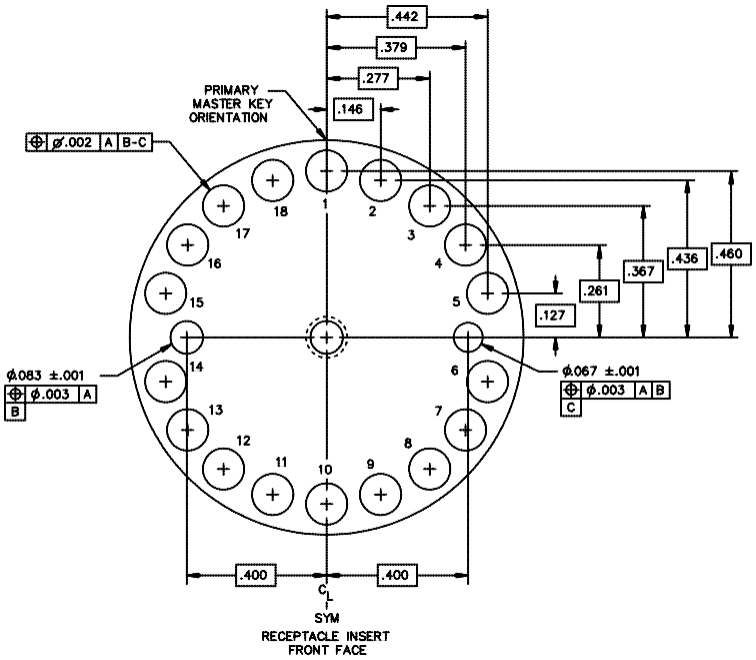

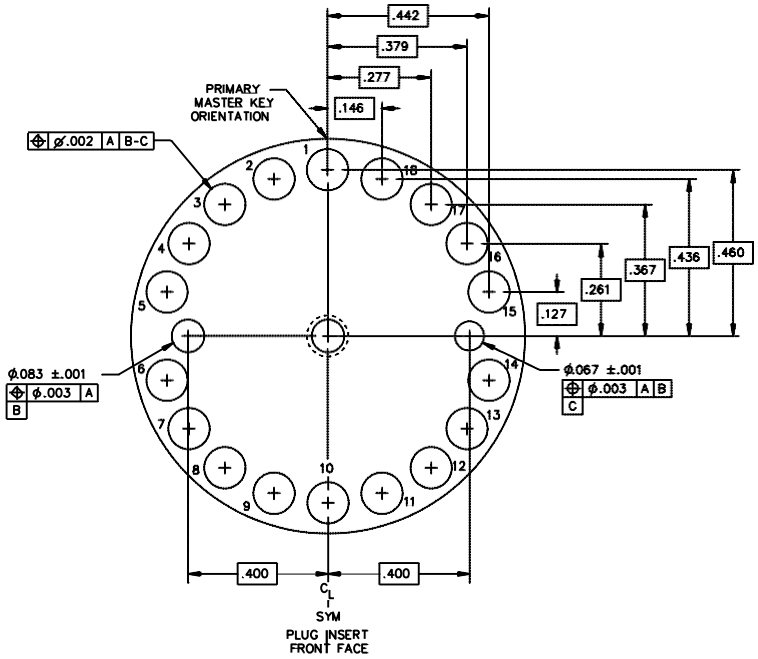

Shell size	Shell size designator	Arrangement number	Number of cavities
23	H	2	18

NOTE:
1. Dimensions are in inches. Metric equivalents are given for information only.

FIGURE B-14. Insert cavity locations, 18 position termini arrangement for shell size 23.

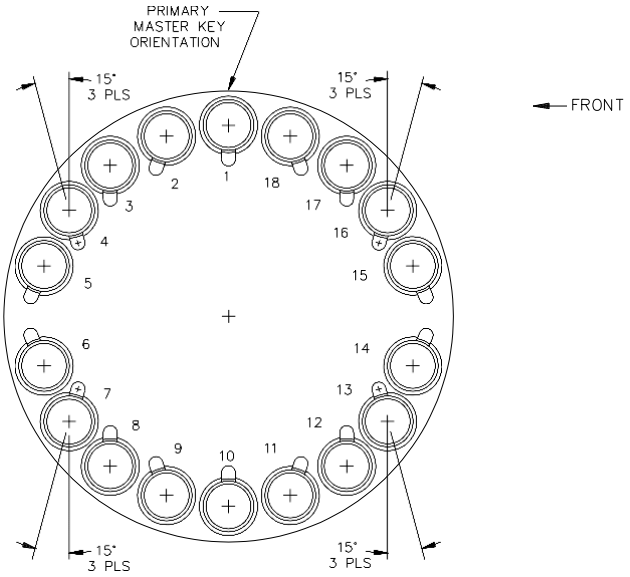

RECEPTACLE INSERT
REAR FACE

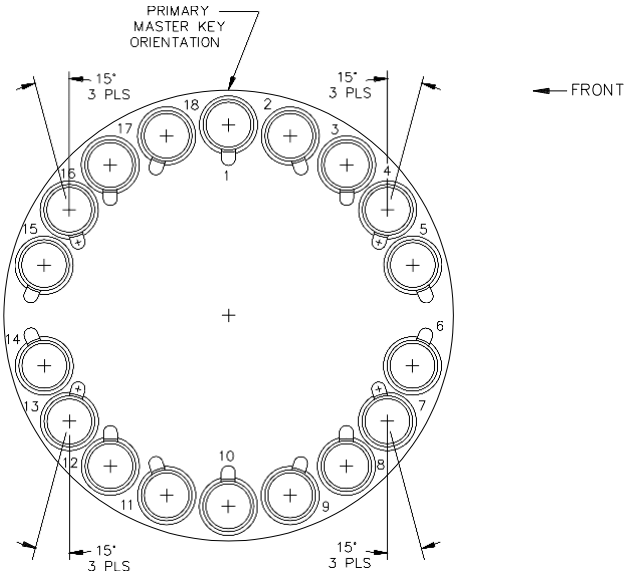

PLUG INSERT
REAR FACE

Shell size	Shell size designator	Arrangement number	Number of cavities
23	H	2	18

NOTES:
1. Angular tolerance ± .5º.
2. For hole location see figure B-14.

FIGURE B-15. Insert cavity keying orientation, 18 position arrangement for shell size 23.

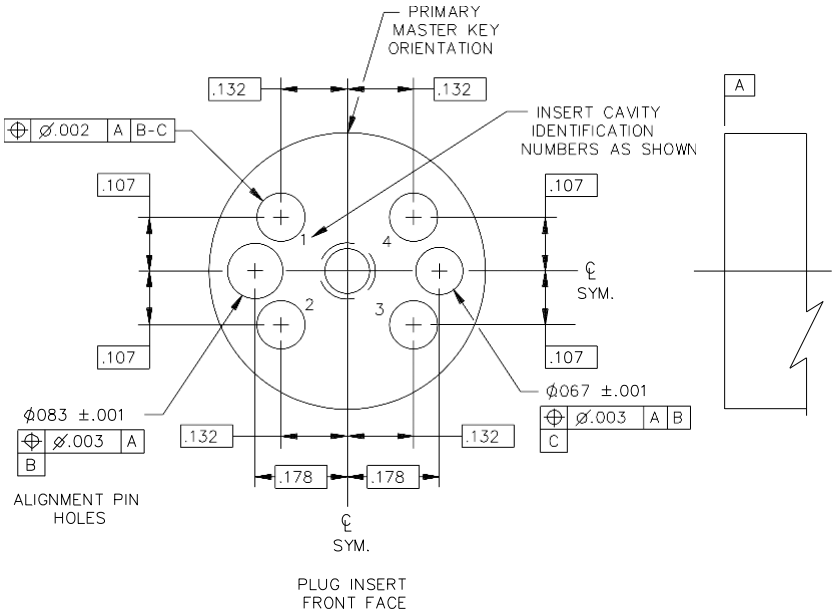

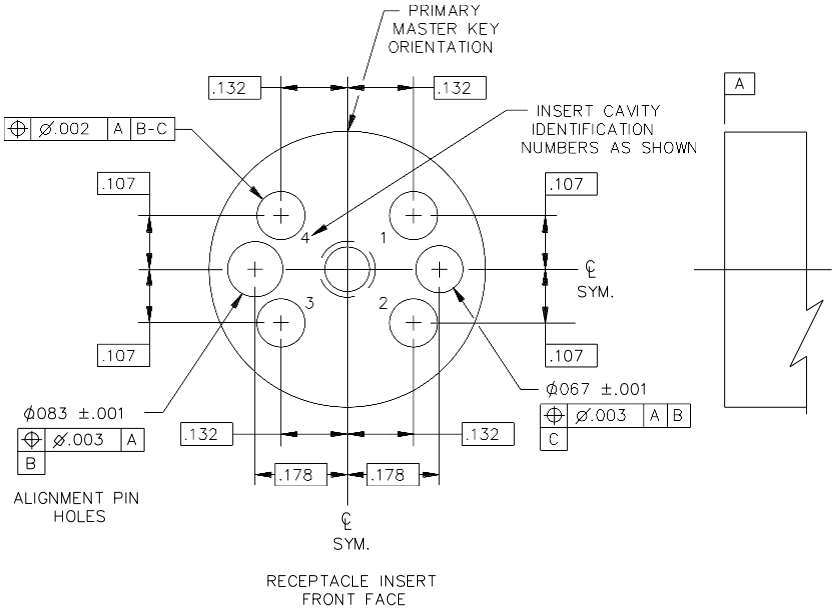

Shell size	Shell size designator	Arrangement number	Number of cavities
13	C	2	4

FIGURE B-16. Insert cavity locations, 4 position termini arrangement for shell size 13.

inches	mm	inches	mm	inches	mm
.001	.025	.067	1.70	.132	3.35
.002	.051	.083	2.12	.170	4.32
.003	.076	.107	2.72	.178	4.52

NOTES:
1. Dimensions are in inches. Metric equivalents are given for information only.
2. Shell size 13 connector with four cavity insert use is restricted to MIL-PRF-28876 retrofit applications.

FIGURE B-16. Insert cavity locations, 4 position termini arrangement for shell size 13- Continued.

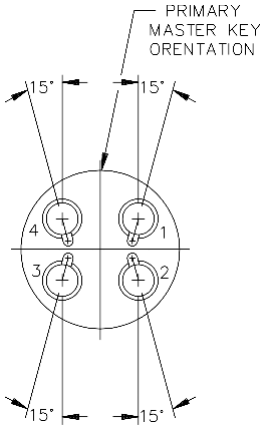

PLUG INSERT
REAR FACE

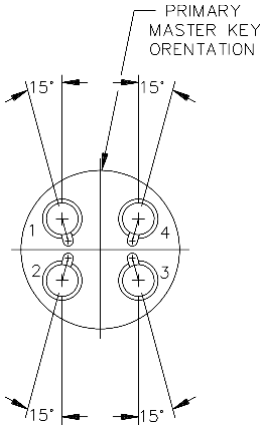

RECEPTACLE INSERT
REAR FACE

Shell size	Shell size designator	Arrangement number	Number of cavities
13	C	2	4

NOTES:
1. Angular tolerance ± .5º.
2. For hole location see figure B-16.
3. Shell size 13 connector with four cavity insert use is restricted to MIL-PRF-28876 retrofit applications.

FIGURE B-17. Insert cavity keying orientation, 4 position termini arrangement for shell size 13.

APPENDIX C

CONNECTOR ACCESSORIES CONFIGURATIONS

C.1 SCOPE

C.1.1 Scope. This appendix covers general requirements for connector accessories (including backshells, EMI retention nuts and dust covers) that augment the specific requirements in the applicable specification sheet and in the main specification. Connector accessory interface dimensions are a mandatory part of the specification. This Appendix is a mandatory part of the specification. The information contained herein is intended for compliance.

C.2 Classification. Connector accessories shall be of the component designators as specified on the applicable military specification sheet (see 3.1).

C.3 DESIGN AND CONSTRUCTION

C.3.1 Materials. Materials shall be suitable for the purpose intended and specified (see 3.1) however, when a definite material is not specified, a material shall be used which will enable the connector assembly to meet the performance requirements of this specification. Acceptance or approval of any constituent material shall not be construed as a guarantee for acceptance of the finished product.

C.3.2 Connector accessories. Connector accessories shall be designed and constructed to withstand normal handling incident to installation and maintenance in service.

C.3.3 Configuration. The configuration and dimensions of connector accessories shall be as specified in the applicable specification sheets (see 3.1).

C.3.4 Screw threads. Backshell screw threads shall be in accordance with figure A-6 in appendix A and shall conform to 3.10.4 when tested in accordance with 4.9.2.4.

C.3.5 Safety wiring. When specified, threaded coupling connector interfaces shall be designed for safety wiring. A minimum of two holes shall be provided for shell size 14 or smaller, and at least three equally spaced holes for sizes 16 and larger. Holes shall be of a diameter sufficient to accommodate .020 inch wire.

C.4 Interchangeability. All connector accessories having the same military part number shall be completely interchangeable with each other with respect to installation and performance as specified herein.

C.5 Intermateability. Unless otherwise specified (see 3.1), the intermateability control dimensions for the threaded mating end of the connector accessories shall conform to the interface dimensions specified in figure A-6.

C.6 Spin coupling. Unless otherwise specified (see 3.1), for all circular connector accessory applications, the coupling nut shall have spin coupling. The coupling nut shall be captivated to, and free to rotate on, the follower of the circular connector accessory. Unless otherwise specified (see 3.1), the spin coupling nut will be either non-self-locking or self-locking. The self-locking coupling devices may exhibit some mechanical resistance while captivated to the follower.

C.7 Self-locking devices. The self-locking device within the coupling nut shall be a corrosion-resistant material and shall provide a positive detent. Couplings with self-locking devices shall meet all the performance requirements specified herein for the accessories specific category.

CONCLUDING MATERIAL

Custodians:
Army - CR
Navy - SH
Air Force - 85
NASA - NA
DLA - CC

Review activities:
Navy - AS
Air Force - 13, 19, 93, 99

Preparing activity:
DLA - CC

(Project 6060-2016-003)

NOTE: The activities listed above were interested in this document as of the date of this document. Since organizations and responsibilities can change, you should verify the currency of the information above using the ASSIST Online database at https://assist.dla.mil.