INCH-POUND

MIL-PRF-6106/47A
3 November 2005
SUPERSEDING
DOD-R-6106/47(USAF)
3 December 1984

PERFORMANCE SPECIFICATION SHEET

RELAYS, ELECTROMAGNETIC, 1000 AMPERES, SPST, N.O., D.B., TYPE II, NON-HERMETICALLY SEALED (AND MOUNTING BRACKET)

This specification is approved for use by all Departments and Agencies of the Department of Defense.

The requirements for acquiring the relays described herein shall consist of this specification and the latest issue of MIL-PRF-6106.

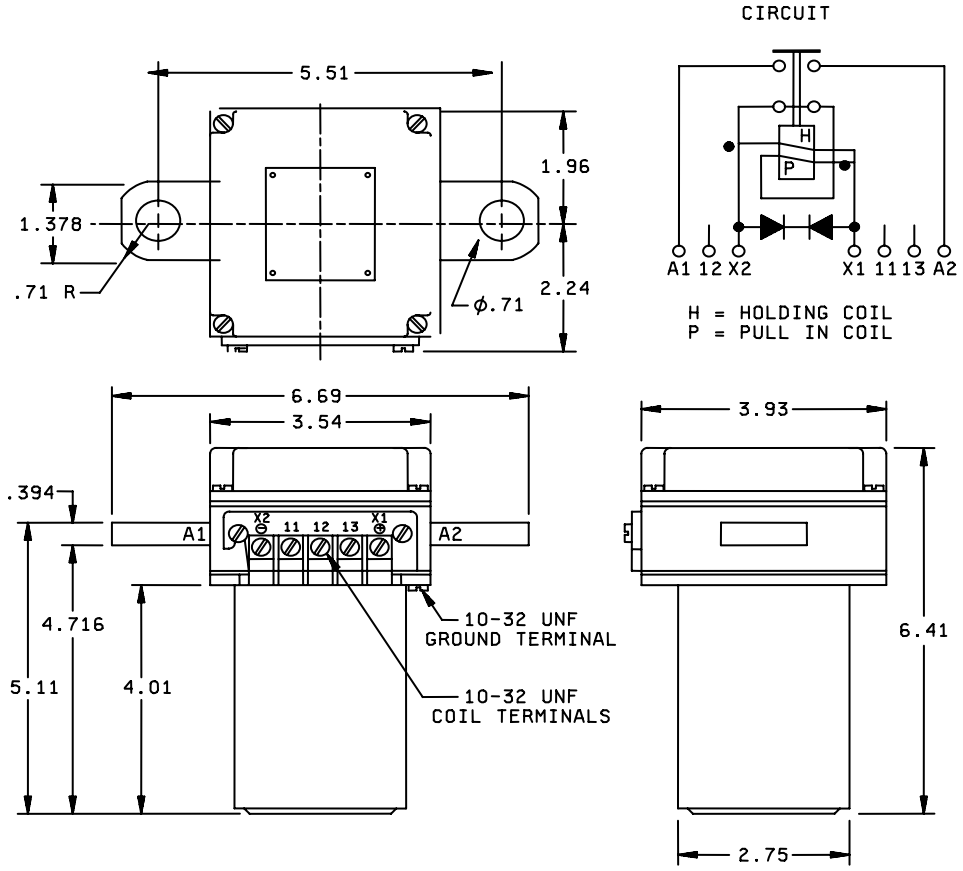

FIGURE 1. Outline drawing.

Inches	mm	Inches	mm
.39	10	4.72	120
.71	18	5.11	130
1.37	35	5.51	140
1.96	50	6.41	163
2.24	57	6.69	170
2.75	70		
3.54	90		
3.93	100		
4.01	102		

NOTES:
1. Dimensions are in inches.
2. Millimeter equivalents are given for general information only.
3. Unless otherwise specified, tolerance is ± 0.062 in (1.57 mm).

FIGURE 1. Outline drawing Continued.

REQUIREMENTS: (Relays)

Coil data:

Duty rating: Continuous.

Operating voltage: 28 V dc to 30 V dc.

Pickup voltage, maximum: 18 V dc over the temperature range.

Dropout voltage: 5 +0, -4 V dc, over the temperature range.

Hold voltage: 10 +0, -4 V dc.

Hold current, maximum: 2 amperes.

Resistance, pull in coil: 0.8 ohm ±20 percent.

Pull in current, maximum: 40 amperes for 30 milliseconds.

Resistance, holding coil: 18.5 ohms ±10 percent.

Time milliseconds, maximum:

Operate: 50

Release: 60

Bounce: 5

CONTACT DATA:

Rated contact load: See table I.

TABLE I. Rated contact load (28 V dc).

Type of load	Life operating cycles x 10^3	Load (Amperes)
Resistive	10	1000
Inductive	5	250
Motor	5	500
Mechanical life	20	250

PHYSICAL CHARACTERISTICS:

Dimensions and configurations: See figures 1 and 2.

Material: Steel, corrosion resistant, seamless, or cold drawn tube.

Finish: Paint, olive.

Weight:

Relay: 4.2 kilograms maximum (9.1 pounds).

Terminals: See figure 1.

ENVIRONMENTAL CHARACTERISTICS:

Temperature range: -55°C to +74°C.

Shock:

Energized: MIL-STD-202, test method 213, test condition A, 50 G's.

Deenergized: MIL-STD-202, test method 213, test condition A, 50 G's (except Z^+ axis, 30 G's).

Vibration:

Energized: MIL-STD-202, test method 204, test condition D, 20 G's.

Deenergized: MIL-STD-202, test method 204, test condition C, 10 G's.

Acceleration: 15 G's.

ELECTRICAL CHARACTERISTICS:

Insulation resistance, minimum:

Initial: 100 megohms.

After life or environmental: 50 megohms.

Dielectric strength:

1 Minute	Test points
1050 Volts	Contacts to case
1050 Volts	Contacts to coil
1050 Volts	Coil to case
1050 Volts	Between open contacts

Contact drop, maximum:

Initial: 0.15 volt.

After life test: 0.175 volt.

Overload current: 4,000 amperes for 20 cycles.

Rupture current: 10,000 amperes for 20 cycles.

Part number: D6106/47- (dash number from table II).

TABLE II. Nomenclature.

-001	Figure 1	Relay
-002	Figure 2	Mounting bracket

REQUIREMENTS: (Mounting bracket, see figure 2)

Material: Aluminum.

Finish: Paint, olive.

Weight: 1.2 pounds (0.54 Kg).

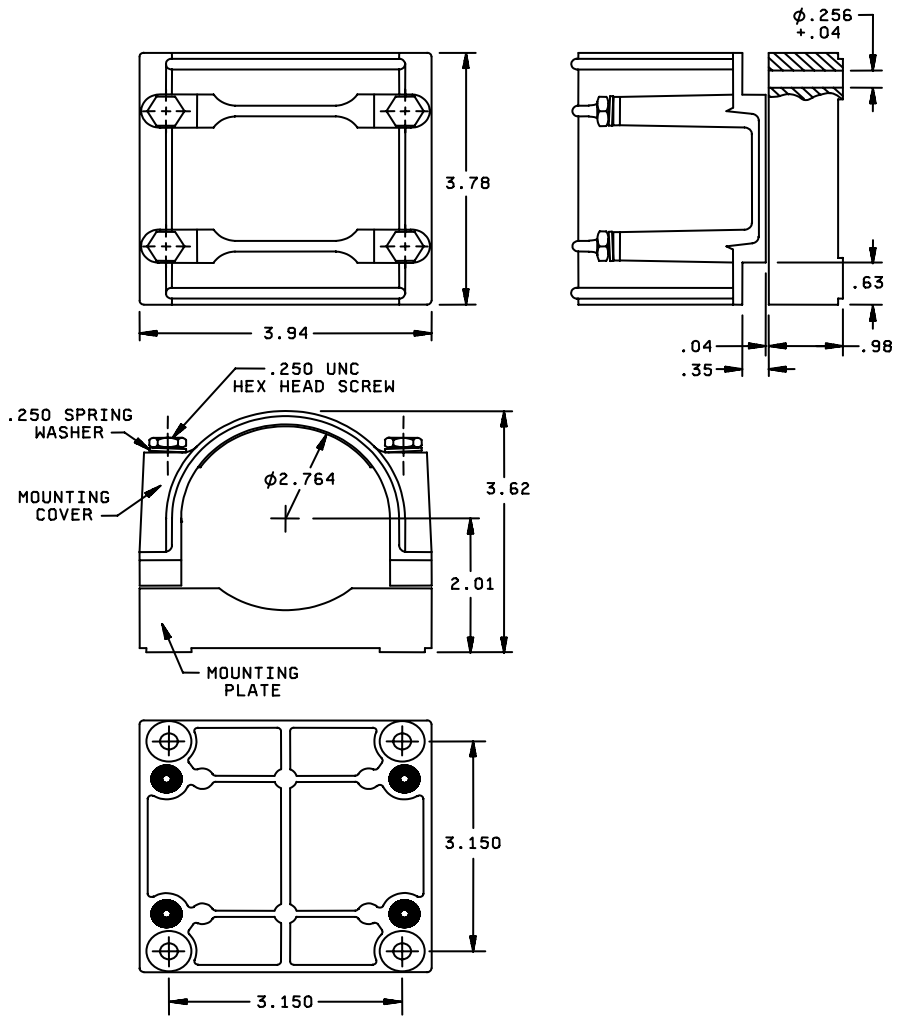

Inches	mm	Inches	mm
.04	1	2.76	70.2
.256	6.5	3.15	80
.354	9	3.62	92
.63	16	3.78	96
.98	25	3.94	100
2.01	51		

FIGURE 2. Mounting bracket.

NOTES:
1. Dimensions are in inches.
2. Millimeter equivalents are for general information only.
3. Unless otherwise specified, tolerance is ± 0.062 in (1.57 mm)
4. Bracket consists of:
   - A: Mounting plate
   - B: Mounting cover
   - C: Spring washer ¼ inch UNC
   - D: Hexagon head screw ¼ inch UNC

FIGURE 2. Mounting bracket Continued.

VERIFICATION:

First article: First article inspection shall be performed at a laboratory acceptable to the Government on sample units produced with equipment and procedures normally used in production, unless otherwise specified by the Government. First article inspection shall be conducted in accordance with MIL-PRF-6106 table VII (Qualification inspection (for relays fully rated 25 amperes and above)), in the order shown. The number of relays to be subjected to first article inspection shall be as specified in table VII of MIL-PRF-6106.

Conformance inspection: All product for delivery shall be subject to conformance inspection in accordance with MIL-PRF-6106 table VIII (Group A inspection).

For government logistical purposes use D6106/47-001 in lieu of the 26.02.15.

NOTES

Referenced documents. In addition to MIL-PRF-6106, this document references the following:

MIL-STD-202

Changes from previous issue: Marginal notations are mark with vertical lines to indicate where changes from the previous issue were made. This was done as a convenience only and the Government assumes no liability whatsoever for any inaccuracies in these notations. Bidders and contractors are cautioned to evaluate the requirements of this document based on the entire content irrespective of the marginal notations and relationship to the last previous issue.

Custodians:
Air Force - 11
Army - AT
DLA – CC

Preparing activity:
DLA - CC

Review activity:
Army - AR
Air Force - 99

(Project 5945-2005-009)

NOTE: The activities listed above were interested in this document as of the date of this document. Since organizations and responsibilities can change, you should verify the currency of the information above using ASSIST Online database at http://assist.daps.dla.mil.